Marine product guide

Engines and generator sets

MITSUBISHI TURBOCHARGER AND ENGINE EUROPE B.V.

MHI GROUP MITSUBISHI HEAVY INDUSTRIES

MITSUBISHI MARINE ENGINE

Marine product guide

Engines and generator sets

Contents

Introduction 2

Rating definitions 4

Fuel consumption method 6

Engine model name explanation 7

Propulsion specifications 9

Diesel-electric propulsion specifications 51

Auxiliary generator specifications 65

Generator set specifications 91

Gas generator set specifications 99

International offices 107

Mitsubishi marine power

Mitsubishi Heavy Industries (MHI) boasts a long tradition in manufacturing engines, tracing back to the production of Japan's first unit for commercial use in 1917 and spanning both diesel and gasoline types in two – and four – stroke configurations. MHI continues to supply engines for a multitude of applications, from industrial and marine to off-highway and agricultural uses, and in line-ups raging from as small as 0.3 kW to gigantic 66,000 kW. As a result, MHI now ranks as one of the words leading engine manufacturers.

To date MHI has supplied more than 120,000 marine diesel engines for both main propulsion and auxiliary applications in ships and boats. They are preferred especially in applications demanding dependable, continuous operation combined with outstanding durability, excellent fuel efficiency and minimal requirements with respect to lubricants and spare parts. This way, MHI marine engines offer the dual advantages of ease of operation and optimum ease of maintenance.

The company's impressive record of engine deliveries is proof of MHI's close and unbroken relationship with marine industries.

Marine engines made in Japan

All MHI marine diesel and gas engines are manufactured to the highest standards, applying state-of-the-art production facilities combined with experienced workmanship. Production is carried out exclusively at the Sagamihara Works in Japan, a facility conforming to strict ISO-9001 international quality standards as certified by DNV (Det Norske Veritas, Norway).

MHI marine engines have been purpose-designed for marine use. The base of the engine was designed based on marine vessels used in Unrestricted Continuous Duty circumstances.

According to our customers, the engines perform excellent in terms of reliability, durability, fuel consumption, long overhaul and easy maintenance.

Emission regulations

MHI has long been engaged in the production of four-stroke cycle diesels, and already its conventional models incorporate a number of important breakthroughs. Next to that, MHI makes significant investments in the Environment-friendly engines development.

A summary of major regulations which Mitsubishi Heavy Industries adheres to is listed here.

Regulations summary

IMO - Annex VI of MARPOL 73/78 which International Maritime Organization (IMO) has issued, entered into force on 19 May 2005. It applies retroactively to new engines greater than 130 kW and installed on vessels constructed from 1 January 2000 or to those which will undergo a major conversion after that date. The regulation also applies to fixed and floating rigs and to drilling platforms.

EU (Includes CCNR) - The emission limitations are valid for propulsion and auxiliary engines of inland vessels in EU inland waterways (Non-Road Directive 97/68/EC, amended 2010/26/EU). Alternatively, the limitations set by the Central Commission for Navigation on the Rhine (CCNR) may be applied (mutual agreement was reached on 1 July 2007).

The following classifications will appear on subsequent pages to identify the regulation with which the engine will be certified or complaint once placed on the market:

non emission	–	Not compliant to emission regulations.
IMO-T1	–	IMO Tier I compliant; Engine International Air Pollution Prevention (EIAPP) certificates available. IMO Tier I is available for replacement only.
IMO-T2	–	IMO Tier II complaint; Engine International Air Pollution Prevention (EIAPP) certificates available.
IMO-T3	–	For IMO Tier III solutions, please contact Mitsubishi Turbocharger and Engine Europe B.V.
EU-3A	–	EU NRMM for inland waterway vessels stage 3A certified (CAT V1:4).
EU-5	–	For future EU stage 5 solutions, please contact Mitsubishi Turbocharger and Engine Europe B.V.
CCNR-2	–	CCNR stage 2 certified.

Classification approvals

Mitsubishi engines are delivered tested and ready for installation on board. We are cooperating with the following major classification societies:

- American Bureau of Shipping (ABS)
- Bureau Veritas (BV)
- China Classification Society (CCS)
- DNV-GL
- Korean Register of Shipping (KR)
- Lloyd's Register (LR)
- Nippon Kaiji Kyokai (NK)
- Registro Italiano Navale (RINA)
- Russian Maritime Register of Shipping (RS)
- Russian River Register (RRR)
- Türk Loydu (TL)

For availability and more information on marine classification society certification, please contact your local distributor or Mitsubishi Turbocharger and Engine Europe B.V.

Propulsion

Unrestricted Continuous Duty (UCD)

Typical operation:

- Allowable load factor is less than 100% of rated power.
- Allowable cruising speed is less than 100% of rated speed.
- Operating hours are unlimited per year.

Typical vessel application:

- Cargo vessels and fishing boats.

Heavy Duty (HD)

Typical operation:

- Allowable load factor is up to 83% of rated power.
- Allowable cruising speed is up to 94% of rated speed.
- 100% of rated power is available intermittently for 8 h per every 24 h operation.
- Operating hours are less than 6,000 h per year.

Typical vessel application:

Working, fishing, tug and ferrie boats and passenger vessels.

Medium Duty (MD)

Typical operation:

- Allowable load factor is up to 75% of rated power.
- Allowable cruising speed is up to 91% of rated speed.
- 100% of rated power is available intermittently for 1 h per every 6 h operation.
- Operating hours are less than 3,000 h per year.

Typical vessel application:

- Pleasure and patrol boats and high performance vessels.

Diesel-electric propulsion

Typical operation:

- Average load factor is 60 - 80% of rated power.
- Operating hours are 3,000 - 6,000 h per year.
- Momentary overload: 110% is available for max. 25 h per year on emergency basis.
- 100% of rated power is available for max. 3 h per every 12 h operation.

Typical vessel application:

- Offshore and inland cargo vessels and ferries.

Auxiliary generator

Main power supply

Typical operation:

- Average load factor is 60 - 80% of rated power.
- Operating hours: 3,000 - 4,000 h per year.
- Momentary overload: 110% is available for governing purpose.

Typical vessel application:

- Fishing boats, ferries, cargo vessels and tankers.

Emergency power supply

Typical operation:

- Average load factor is 60% of rated power.
- Operating hours: up to 500 h per year.

- Overload: 110% can be used for less than 25 h per year.

Typical vessel application:

- Tankers, cargo and cruise vessels.

Gas-electric propulsion

Typical operation:

- Average load factor is 60 - 80% of rated power.
- Operating hours are 3,000 - 6,000 h per year.
- 100% of rated power is available for max. 3 h per every 12 h operation.

Typical vessel application:

- Offshore and inland cargo vessels and ferries.

RATING DEFINITIONS MEDIUM SPEED

Propulsion

Heavy Duty (HD)

Typical operation:

- Allowable load factor is less than 100% of rated power.
- Allowable cruising speed is less than 100% of rated speed.
- Operating hours are less than 8,000 h per year.

Typical vessel application:

- Inland cargo vessels, fishing boats and coasters.

Medium Duty (MD)

Typical operation:

- Allowable load factor is up to 83% of rated power.
- Allowable cruising speed is up to 94% of rated speed.
- 100% of rated power is available intermittently for 4 h per every 12 h operation.
- Operating hours are less than 3,000 h per year.

Typical vessel application:

- Tug and fishing boats.

Light Duty (LD)

Typical operation:

- Allowable load factor is up to 75% of rated power.
- Allowable cruising speed is up to 90% of rated speed.
- 100% of rated power is available intermittently for 1 h per every 6 h operation.
- Operating hours are less than 1,000 h per year.

Typical vessel application:

- Fast vessels with low load.

Heavy Duty Tugboat (HD-T)

Typical operation:

- 100% of rated power is available intermittently for 8 h per every 24 h operation.
- Operating hours are less than 6,000 h per year.
- Average load factor is 60 - 80% of rated power.

Typical vessel application:

- (Harbour) tugboats.

Diesel-electric propulsion

Continuous operation:
- Allowable load factor is less than 100% of rated power.
- Operating hours are unlimited per year.
- Overload: 110% is available for max. 25 h per year on emergency basis.

Typical vessel application:
- Ocean/sea going cargo vessels and tugboats.

Intermittent operation:
- Average load factor is 60 - 80% of rated power.
- 100% of rated power is available intermittently for less than 3 h per every 12 h operation.
- Operating hours: 3,000 - 4,000 h per year.
- Overload: 110% is available for max. 25 h per year on emergency basis.

Typical vessel application:
- Offshore vessels and harbour tugboats.

Auxiliary generator

Main power supply:
- Average load factor is 60 - 80% of rated power.
- 100% of rated power is available intermittently for less than 3 h per every 12 h operation.
- Operating hours: 3,000 - 4,000 h per year.
- Overload: 110% is available for max. 25 h per year on emergency basis.

Typical vessel application:
- Ocean/sea going cargo vessels and tugboats.

FUEL CONSUMPTION METHOD

The fuel consumption varies according to test condition, specification and application of each customer.

To obtain the fuel consumption based on the most typical test condition, we adopted average fuel consumption recommended by ISO 8178 (E3 standard test cycle for propulsion application and D2 for auxiliary applications) except for SU series*. The fuel consumption values published in this marine product guide were calculated taking each steady-state mode into account.

E2	–	Test cycle for “constant-speed main propulsion” applications (including diesel-electric drive and all controllable –pitch propeller installations).
E3	–	Test cycle for “propeller-law-operated main and propeller-law-operated auxiliary engine” application.
D2	–	Test cycle for “constant-speed auxiliary engine” application.

* SU Series (Medium speed engines) belongs in a different category from our High speed Engine models, SU series indicates fuel consumption value at 100% rated power in g/kWh.

Weighting factors of type E3 ISO 8178 test cycles

Mode number	1	2	3	4
Power (%)	100	75	50	25
Weighting factor	0.20	0.50	0.15	0.15

Weighting factors of type D2 ISO 8178 test cycles

Mode number	1	2	3	4	5
Power (%)	100	75	50	25	10
Weighting factor	0.05	0.25	0.30	0.30	0.10

Fuel consumption is based on ISO 3046/1 with 5% tolerance at rated power, weighing 836 g/liter based on the regulations of JIS (Japanese Industrial Standards) and a LHV of 42,780 kJ/kg, excluding pumps.

ENGINE MODEL NAME EXPLANATION

G S 6 R2 - T2 MPTAW 3L

- 3L — Identical number for revision (Power up)
- MPTAW — Type of charge air cooling
  - MPTAW — Turbocharged, double cooling, charge air cooler by closed fresh water system controlled by thermostat.
  - MPTK — Turbocharged, double cooling, charge air cooler directly cooled by sea water.
  - MPTA — Turbocharged, single cooling, charge air cooler integrated in jacket water system.
- T2 — Compliant to emission regulations
  - C2 — CCNR-2 & IMO-T2
  - T2 — IMO-T2
  - Z3 — EU-3A & IMO-T2
  - None — IMO-T1 / non emission
- R2 — Series
- 6 — No. of cylinders
- S — S - Capital of Sagamihara
- G — G - Gas

Propulsion specifications

Fishing vessel - Juli-Ane
Partner - West Diesel A.S.

ENGINE MODEL LINE-UP - MARINE PROPULSION

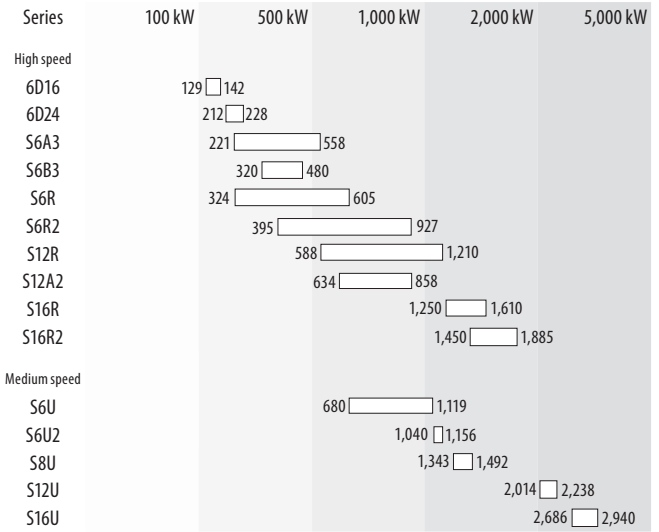

Propulsion products IMO Tier I / non emission - High speed

Engine model	kW	bhp	rpm	Rating	Emission	Page
Engine *(without heat exchanger)*						
6D16-T	129	173	2,700	HD	not regulated	13
6D16-T	142	190	2,700	HD	non emission	13
6D24-T	212	284	2,200	HD	non emission	14
6D24-TC	228	306	2,200	HD	non emission	14
S6B3-MPTK	345	462	1,940	UCD	IMO-T1	15
S6B3-MPTK	380	509	2,000	HD	IMO-T1	15
S6B3-MPTK	415	557	2,065	MD	IMO-T1	15
S6A3-MPTK	405	543	1,840	UCD	IMO-T1	16
S6A3-MPTK	445	597	1,900	HD	IMO-T1	16
S6A3-MPTK	490	657	1,960	MD	IMO-T1	16
S6R-MPTK	470	630	1,600	UCD	IMO-T1	17
S6R-MPTK	520	697	1,650	HD	IMO-T1	17
S6R-MPTK	605	811	1,800	MD	IMO-T1	17
S6R2-MPTK	480	643	1,350	UCD	IMO-T1	18
S6R2-MPTK	530	710	1,400	HD	IMO-T1	18
S6R2-MPTK	610	818	1,500	MD	IMO-T1	18
S12A2-MPTK	701	940	1,940	UCD	IMO-T1	19
S12A2-MPTK	776	1,040	2,000	HD	IMO-T1	19
S12A2-MPTK	858	1,150	2,100	MD	IMO-T1	19
S12R-MPTK	940	1,260	1,600	UCD	IMO-T1	20
S12R-MPTK	1,040	1,394	1,650	HD	IMO-T1	20
S12R-MPTK	1,210	1,622	1,800	MD	IMO-T1	20
S16R-MPTK	1,250	1,676	1,600	UCD	IMO-T1	21
S16R-MPTK	1,380	1,850	1,650	HD	IMO-T1	21
S16R-MPTK	1,610	2,158	1,800	MD	IMO-T1	21

Engine model	kW	bhp	rpm	Rating	Emission	Page
Propulsion package (with built-up heat exchanger and sea water pump)						
S6B3-MPTK	345	463	1,940	UCD	non emission	22
S6B3-MPTK	380	510	2,000	HD	non emission	22
S6A3-MPTK	368	494	1,840	UCD	non emission	23
S6A3-MPTK	405	543	1,840	UCD	non emission	23
S6A3-MPTK	445	597	1,900	HD	non emission	23
S6R -MPTK	405	543	1,600	UCD	non emission	24
S6R -MPTK	470	630	1,600	UCD	non emission	24
S6R -MPTK	520	697	1,650	HD	non emission	24

Propulsion products - IMO Tier II / CCNR-2 / EU-3A - High speed

Engine model	kW	bhp	rpm	Rating	Emission	Page
Engine *(without heat exchanger)*						
6D16-T	129	173	2,700	HD	not regulated for IMO-T2	25
6D24-TC	228	306	2,200	HD	on request	26
S6B3-T2MPTAW	320	429	1,940	UCD	IMO-T2	27
S6B3-T2MPTAW	350	469	2,000	HD	IMO-T2	27
S6A3-MPTAW	221	296	1,530	UCD	IMO-T2	28
S6A3-MPTAW	360	483	1,840	UCD	IMO-T2 / CCNR-2	28
S6A3-MPTAW	385	516	1,800	MD	CCNR-2	28
S6R-MPTAW	324	434	1,600	UCD	IMO-T2	29
S6R-MPTAW	447	599	1,600	UCD	IMO-T2	29
S6R-(Z3)MPTAW	470	630	1,600	UCD	IMO-T2 / EU-3A	29
S6R-MPTAW	520	697	1,650	HD	IMO-T2	29
S6R-(Z3)MPTAW	605	811	1,800	MD	IMO-T2 / EU-3A	29
S6R2-T2MPTK	324	435	1,350	UCD	IMO-T2	30
S6R2-T2MPTK	380	510	1,350	UCD	IMO-T2	30
S6R2-T2MPTK	395	530	1,350	UCD	IMO-T2	30
S6R2-T2MPTK	423	567	1,350	UCD	IMO-T2	30
S6R2-T2MPTK	480	644	1,350	UCD	IMO-T2	30
S6R2-T2MPTK	530	711	1,400	HD	IMO-T2	30
S6R2-T2MPTK	610	818	1,500	MD	IMO-T2	30
S6R2-T2MPTAW3M	480	644	1,350	HD	IMO-T2	31
S6R2-T2MPTAW3M	555	744	1,350	HD	IMO-T2	31
S6R2-T2MPTAW3M	645	865	1,400	HD	IMO-T2	31
S6R2-T2MPTAW3M	691	927	1,400	HD	IMO-T2	31
S12A2-C2MPTK	634	850	1,940	UCD	IMO-T2 / CCNR-2	32
S12A2-(Z3)MPTAW	701	940	1,940	UCD	IMO-T2 / EU-3A	33
S12A2-MPTAW	776	1,041	2,000	HD	IMO-T2	33
S12R-MPTAW	588	789	1,400	UCD	IMO-T2	34
S12R-MPTAW	696	933	1,500	UCD	IMO-T2	34
S12R-MPTAW	749	1,004	1,500	UCD	IMO-T2	34
S12R-MPTAW	749	1,004	1,600	UCD	IMO-T2	34
S12R-(Z3)MPTAW	940	1,261	1,600	UCD	IMO-T2 / EU-3A	34
S12R-MPTAW	1,040	1,395	1,650	HD	IMO-T2	34
S16R-(Z3)MPTAW	1,250	1,676	1,600	UCD	IMO-T2 / EU-3A	35
S16R-MPTAW	1,380	1,851	1,650	HD	IMO-T2	35

Engine model	kW	bhp	rpm	Rating	Emission	Page
S16R2-T2MPTAW	1,450	1,944	1,350	UCD	IMO-T2	36
S16R2-T2MPTAW	1,600	2,146	1,400	HD	IMO-T2	36
S16R2-T2MPTAW	1,885	2,528	1,500	MD	IMO-T2	36
Propulsion package (with built-up heat exchanger and sea water pump)						
S6B3-T2MPTK2	378	507	2,001	HD	IMO-T2	37
S6B3-T2MPTK2	448	601	2,001	MD	IMO-T2	37
S6A3-T2MPTK3	502	673	1,900	HD	IMO-T2	38
S6A3-T2MPTK3	558	748	1,900	MD	IMO-T2	38
S6R-T2MPTK	470	630	1,600	UCD	IMO-T2	39
S6R-T2MPTK	520	697	1,650	HD	IMO-T2	39
S6R-T2MPTK	605	811	1,800	MD	IMO-T2	39
S6R2-T2MPTK	480	643	1,350	UCD	IMO-T2	40
S6R2-T2MPTK	530	711	1,400	HD	IMO-T2	40
S6R2-T2MPTK	610	818	1,500	MD	IMO-T2	40
S6R2-T2MPTK3	691	927	1,406	HD	IMO-T2	41
S6R2-T2MPTK3	759	1,018	1,406	MD	IMO-T2	41
S12A2-T2MPTK	701	940	1,800	UCD	IMO-T2	42
S12A2-T2MPTK	776	1,041	1,860	HD	IMO-T2	42
S12A2-T2MPTK	858	1,151	1,920	MD	IMO-T2	42
S12R-T2MPTK	940	1,261	1,600	UCD	IMO-T2	43
S12R-T2MPTK	1,040	1,395	1,650	HD	IMO-T2	43
S12R-T2MPTK	1,210	1,623	1,800	MD	IMO-T2	43
S16R-T2MPTK	1,250	1,676	1,600	UCD	IMO-T2	44
S16R-T2MPTK	1,380	1,851	1,650	HD	IMO-T2	44
S16R-T2MPTK	1,610	2,159	1,800	MD	IMO-T2	44
S16R2-T2MPTK	1,450	1,944	1,350	UCD	IMO-T2	45
S16R2-T2MPTK	1,600	2,156	1,400	HD	IMO-T2	45
S16R2-T2MPTK	1,885	2,528	1,500	MD	IMO-T2	45

Propulsion products - IMO Tier II / CCNR-2 - Medium speed

Engine model	kW	bhp	rpm	Rating	Emission	Page
S6U-C2MPTK	680	912	1,100	HD	IMO-T2	46
S6U-C2MPTK	719	964	1,100	HD	IMO-T2	46
S6U-C2MPTK	749	1,004	1,100	HD	IMO-T2	46
S6U-C2MPTK	1,007	1,350	1,060	HD	IMO-T2 / CCNR-2	46
S6U-C2MPTK	1,103	1,479	1,150	HD-T	IMO-T2 / CCNR-2	46
S6U-C2MPTK	1,119	1,499	1,100	MD	IMO-T2 / CCNR-2	46
S6U2-MPTK	1,040	1,395	930	HD	IMO-T2 / CCNR-2	47
S6U2-MPTK	1,156	1,550	960	MD	IMO-T2 / CCNR-2	47
S8U-C2MPTK	1,343	1,801	1,060	HD	IMO-T2 / CCNR-2	48
S8U-C2MPTK	1,470	1,971	1,150	HD-T	IMO-T2 / CCNR-2	48
S8U-C2MPTK	1,492	2,001	1,100	MD	IMO-T2 / CCNR-2	48
S12U-MPTK	2,014	2,701	1,060	HD	IMO-T2	49
S12U-MPTK	2,205	2,957	1,150	HD-T	IMO-T2	49
S12U-MPTK	2,238	3,001	1,100	MD	IMO-T2	49
S16U-MPTK	2,686	3,602	1,060	HD	IMO-T2	50
S16U-MPTK	2,940	3,943	1,150	HD-T	IMO-T2	50
S16U-MPTK	2,984	4,002	1,100	MD	IMO-T2	50

Propulsion - IMO Tier I / non emission
High speed - Engine

6D16-T

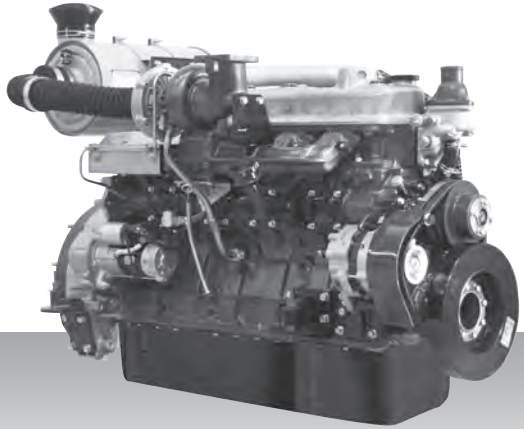

6-cylinder, 4-cycle, water cooled diesel engine,
wih direct-injection, turbocharger and air-cooler.

Bore x stroke (mm) : 118 x 115
Displacement (l) : 7.54

Commercial rating

kW	bhp	rpm	Rating	Fuel cons. l/hr*	Emission
129	173	2,700	HD	on request	not regulated
142	190	2,700	HD	30.5	non emission

*Average fuel consumption according to ISO, see page 6.
Specifications / data subject to change without prior notice.

Product dimensions & dry weight

L (mm) : 1,335
W (mm) : 731
H (mm) : 830
Dry weight (kg) : 575

Dimensions and weight are based on standard configuration.

Propulsion - IMO Tier I / non emission
High speed - Engine

6D24-T(C)

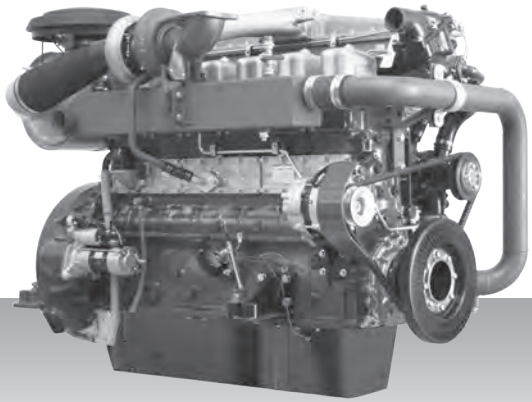

6-cylinder, 4-cycle, water cooled diesel engine,
wih direct-injection, turbocharger and air-cooler.

Bore x stroke (mm) : 130 x 150
Displacement (l) : 11.95

Commercial rating

kW	bhp	rpm	Rating	Fuel cons. l/hr*	Emission
212	284	2,200	HD	42.6	non emission
228	306	2,200	HD	on request	non emission

*Average fuel consumption according to ISO, see page 6.
Specifications / data subject to change without prior notice.

Product dimensions & dry weight

L (mm) : 1,535
W (mm) : 880
H (mm) : 1,235
Dry weight (kg) : 1,209

Dimensions and weight are based on standard configuration.

Propulsion - IMO Tier I / non emission
High speed - Engine

S6B3-MPTK

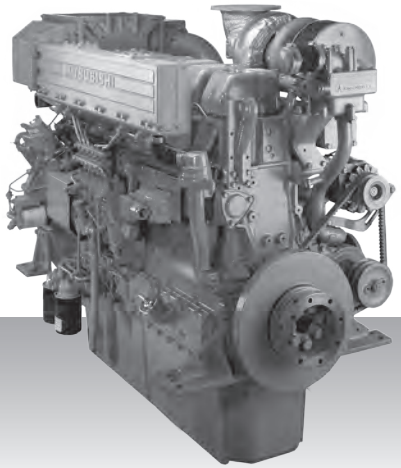

6-cylinder, 4-cycle, water cooled diesel engine,
wih direct-injection, turbocharger and air-cooler.

Bore x stroke (mm) : 135 x 170
Displacement (l) : 14.60

Commercial rating

kW	bhp	rpm	Rating	Fuel cons. l/hr*	Emission
345	463	1,940	UCD	59.6	IMO-T1
380	510	2,000	HD	68.0	IMO-T1
415	557	2,065	MD	on request	IMO-T1

*Average fuel consumption according to ISO, see page 6.
Specifications / data subject to change without prior notice.

Product dimensions & dry weight

L (mm) : 1,834
W (mm) : 873
H (mm) : 1,331
Dry weight (kg) : 1,300

Dimensions and weight are based on standard configuration.

Propulsion - IMO Tier I / non emission
High speed - Engine

S6A3-MPTK

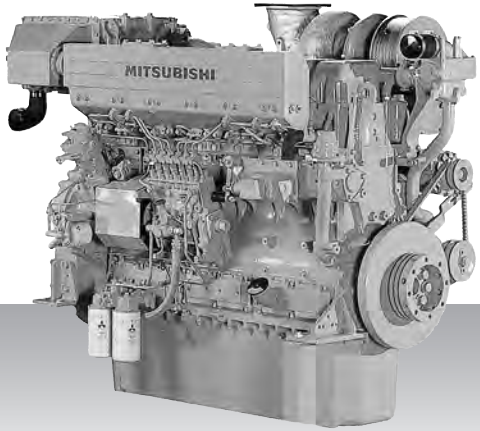

6-cylinder, 4-cycle, water cooled diesel engine,
wih direct-injection, turbocharger and air-cooler.

Bore x stroke (mm) : 150 x 175
Displacement (l) : 18.56

Commercial rating

kW	bhp	rpm	Rating	Fuel cons. l/hr*	Emission
405	543	1,840	UCD	69.8	IMO-T1
445	597	1,900	HD	78.3	IMO-T1
490	657	1,960	MD	85.9	IMO-T1

*Average fuel consumption according to ISO, see page 6.
Specifications / data subject to change without prior notice.

Product dimensions & dry weight

L (mm) : 2,037
W (mm) : 927
H (mm) : 1,371
Dry weight (kg) : 1,900

Dimensions and weight are based on standard configuration.

Propulsion - IMO Tier I / non emission
High speed - Engine

S6R-MPTK

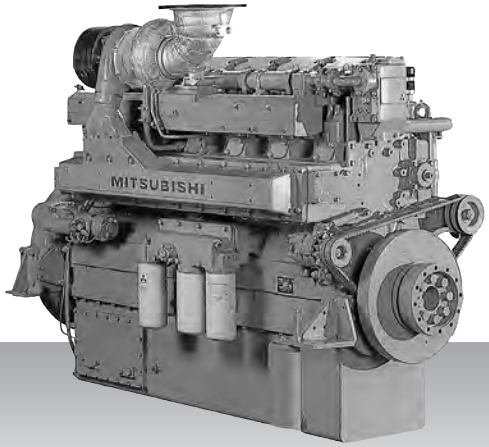

6-cylinder, 4-cycle, water cooled diesel engine,
wih direct-injection, turbocharger and air-cooler.

Bore x stroke (mm) : 170 x 180
Displacement (l) : 24.51

Commercial rating

kW	bhp	rpm	Rating	Fuel cons. l/hr*	Emission
470	630	1,600	UCD	79.0	IMO-T1
520	697	1,650	HD	87.9	IMO-T1
605	811	1,800	MD	101.3	IMO-T1

*Average fuel consumption according to ISO, see page 6.
Specifications / data subject to change without prior notice.

Product dimensions & dry weight

L (mm) : 1,811
W (mm) : 1,108
H (mm) : 1,614
Dry weight (kg) : 2,830

Dimensions and weight are based on standard configuration.

Propulsion - IMO Tier I / non emission
High speed - Engine

S6R2-MPTK

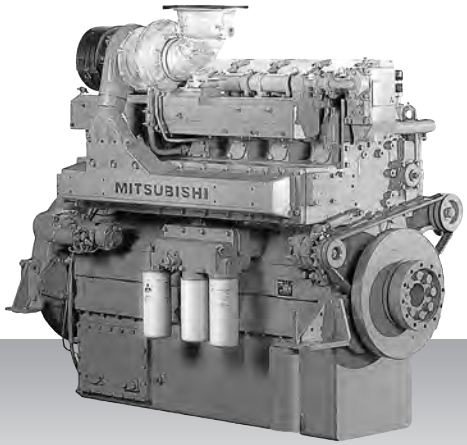

6-cylinder, 4-cycle, water cooled diesel engine,
wih direct-injection, turbocharger and air-cooler.

Bore x stroke (mm) : 170 x 220
Displacement (l) : 29.96

Commercial rating

kW	bhp	rpm	Rating	Fuel cons. l/hr*	Emission
480	644	1,350	UCD	78.9	IMO-T1
530	711	1,400	HD	86.6	IMO-T1
610	818	1,500	MD	100.4	IMO-T1

*Average fuel consumption according to ISO, see page 6.
Specifications / data subject to change without prior notice.

Product dimensions & dry weight

L (mm) : 1,811
W (mm) : 1,108
H (mm) : 1,694
Dry weight (kg) : 2,960

Dimensions and weight are based on standard configuration.

Propulsion - IMO Tier I / non emission
High speed - Engine

S12A2-MPTK

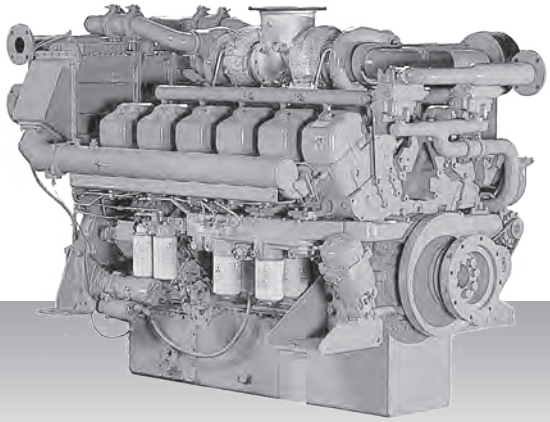

6-cylinder, 4-cycle, water cooled diesel engine,
wih direct-injection, turbocharger and air-cooler.

Bore x stroke (mm) : 150 x 160
Displacement (l) : 33.93

Commercial rating

kW	bhp	rpm	Rating	Fuel cons. l/hr*	Emission
701	940	1,940	UCD	122.3	IMO-T1
776	1,041	2,000	HD	136.6	IMO-T1
858	1,151	2,100	MD	152.7	IMO-T1

*Average fuel consumption according to ISO, see page 6.
Specifications / data subject to change without prior notice.

Product dimensions & dry weight

L (mm) : 2,291
W (mm) : 1,418
H (mm) : 1,596
Dry weight (kg) : 3,720

Dimensions and weight are based on standard configuration.

Propulsion - IMO Tier I / non emission
High speed - Engine

S12R-MPTK

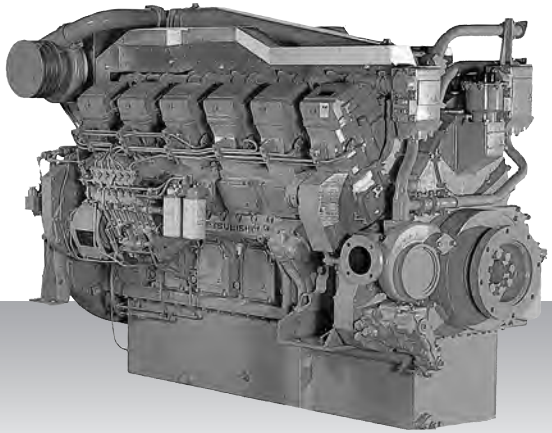

12-cylinder, 4-cycle, water cooled diesel engine,
wih direct-injection, turbocharger and air-cooler.

Bore x stroke (mm) : 170 x 180
Displacement (l) : 49.03

Commercial rating

kW	bhp	rpm	Rating	Fuel cons. l/hr*	Emission
940	1,261	1,600	UCD	158.0	IMO-T1
1,040	1,395	1,650	HD	176.5	IMO-T1
1,210	1,623	1,800	MD	202.9	IMO-T1

*Average fuel consumption according to ISO, see page 6.
Specifications / data subject to change without prior notice.

Product dimensions & dry weight

L (mm) : 2,376
W (mm) : 1,512
H (mm) : 1,731
Dry weight (kg) : 5,320

Dimensions and weight are based on standard configuration.

Propulsion - IMO Tier I / non emission
High speed - Engine

S16R-MPTK

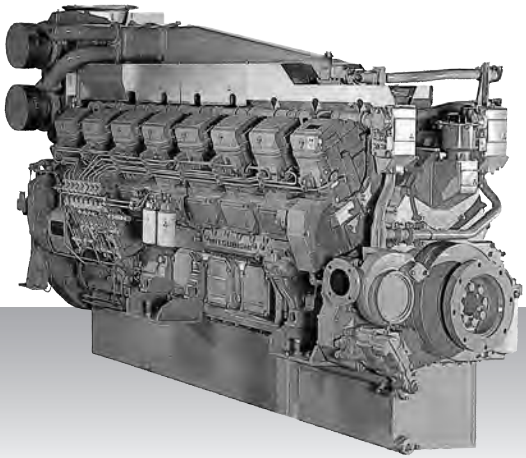

16-cylinder, 4-cycle, water cooled diesel engine,
wih direct-injection, turbocharger and air-cooler.

Bore x stroke (mm) : 170 x 180
Displacement (l) : 65.37

Commercial rating

kW	bhp	rpm	Rating	Fuel cons. l/hr*	Emission
1,250	1,676	1,600	UCD	206.0	IMO-T1
1,380	1,851	1,650	HD	234.4	IMO-T1
1,610	2,159	1,800	MD	268.7	IMO-T1

*Average fuel consumption according to ISO, see page 6.
Specifications / data subject to change without prior notice.

Product dimensions & dry weight

L (mm) : 2,931
W (mm) : 1,512
H (mm) : 1,960
Dry weight (kg) : 6,780

Dimensions and weight are based on standard configuration.

Propulsion - IMO Tier I / non emission
High speed - Propulsion package

S6B3-MPTK

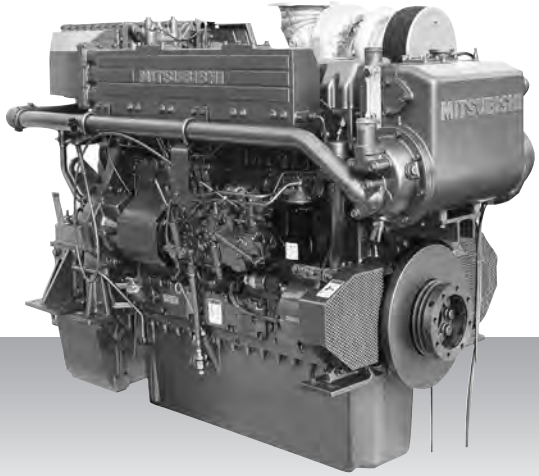

6-cylinder, 4-cycle, water cooled diesel engine, with direct-injection, turbocharger, air-cooler, build-up heat exchanger and sea water pump.

Bore x stroke (mm) : 135 x 170
Displacement (l) : 14.60

Commercial rating

kW	bhp	rpm	Rating	Fuel cons. l/hr*	Emission
345	463	1,940	UCD	on request	non emission
380	510	2,000	HD	on request	non emission

*Average fuel consumption according to ISO, see page 6.
Specifications / data subject to change without prior notice.

Product dimensions & dry weight

L (mm) : 1,967
W (mm) : 984
H (mm) : 1,330
Dry weight (kg) : 1,400

Dimensions and weight are based on standard configuration.

Propulsion - IMO Tier I / non emission
High speed - Propulsion package

S6A3-MPTK

6-cylinder, 4-cycle, water cooled diesel engine, with direct-injection, turbocharger, air-cooler, build-up heat exchanger and sea water pump.

Bore x stroke (mm) : 150 x 175
Displacement (l) : 18.50

Commercial rating

kW	bhp	rpm	Rating	Fuel cons. l/hr*	Emission
368	493	1,840	UCD	on request	non emission
405	543	1,840	UCD	on request	non emission
445	597	1,900	HD	on request	non emission

*Average fuel consumption according to ISO, see page 6.
Specifications / data subject to change without prior notice.

Product dimensions & dry weight

L (mm) : 2,189
W (mm) : 1,127
H (mm) : 1,421
Dry weight (kg) : 2,100

Dimensions and weight are based on standard configuration.

Propulsion - IMO Tier I / non emission
High speed - Propulsion package

S6R-MPTK

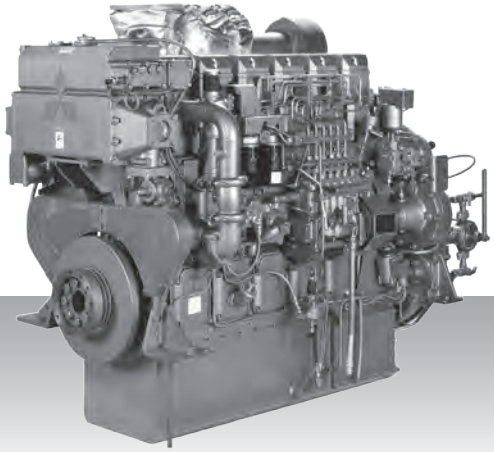

6-cylinder, 4-cycle, water cooled diesel engine, with direct-injection, turbocharger, air-cooler, build-up heat exchanger and sea water pump.

Bore x stroke (mm) : 170 x 180
Displacement (l) : 24.51

Commercial rating

kW	bhp	rpm	Rating	Fuel cons. l/hr*	Emission
405	543	1,600	UCD	on request	non emission
470	630	1,600	UCD	on request	non emission
520	697	1,650	HD	on request	non emission

*Average fuel consumption according to ISO, see page 6.
Specifications / data subject to change without prior notice.

Product dimensions & dry weight

L (mm) : 2,122
W (mm) : 1,202
H (mm) : 1,615
Dry weight (kg) : 2,950

Dimensions and weight are based on standard configuration.

Propulsion - IMO Tier II / CCNR-2 / EU-3A
High speed - Engine

6D16-T

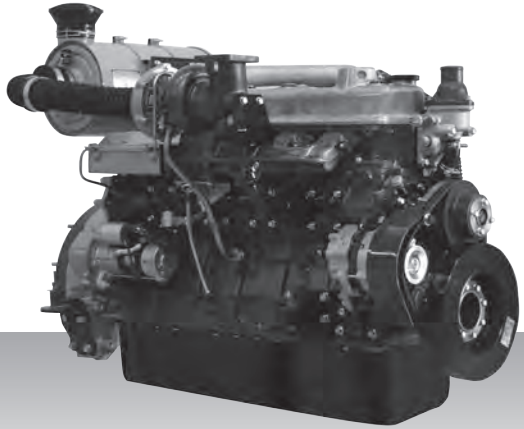

6-cylinder, 4-cycle, water cooled diesel engine,
wih direct-injection, turbocharger and air-cooler.

Bore x stroke (mm) : 118 x 115
Displacement (l) : 7.54

Commercial rating

kW	bhp	rpm	Rating	Fuel cons. l/hr*	Emission
129	173	2,700	HD	on request	not regulated for IMO-T2

*Average fuel consumption according to ISO, see page 6.
Specifications / data subject to change without prior notice.

Product dimensions & dry weight

L (mm) : 1,335
W (mm) : 731
H (mm) : 830
Dry weight (kg) : 575

Dimensions and weight are based on standard configuration.

Propulsion - IMO Tier II / CCNR-2 / EU-3A
High speed - Engine

6D24-TC

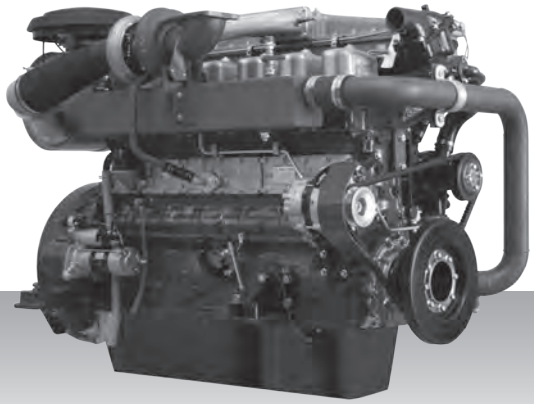

6-cylinder, 4-cycle, water cooled diesel engine,
wih direct-injection, turbocharger and air-cooler.

Bore x stroke (mm) : 130 x 150
Displacement (l) : 11.95

Commercial rating

kW	bhp	rpm	Rating	Fuel cons. l/hr*	Emission
228	306	2,200	HD	on request	on request

*Average fuel consumption according to ISO, see page 6.
Specifications / data subject to change without prior notice.

Product dimensions & dry weight

L (mm) : 1,535
W (mm) : 880
H (mm) : 1,235
Dry weight (kg) : 1,209

Dimensions and weight are based on standard configuration.

Propulsion - IMO Tier II / CCNR-2 / EU-3A
High speed - Engine

S6B3-T2MPTAW

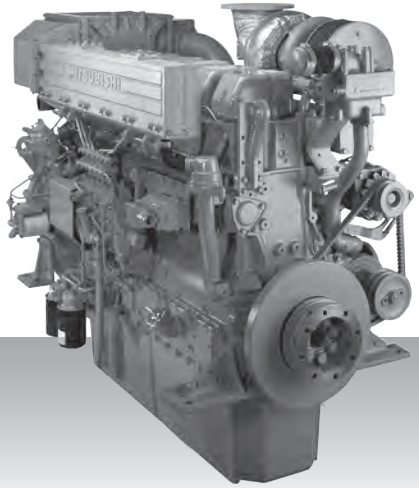

6-cylinder, 4-cycle, water cooled diesel engine,
wih direct-injection, turbocharger and air-cooler.

Bore x stroke (mm) : 135 x 170
Displacement (l) : 14.60

Commercial rating

kW	bhp	rpm	Rating	Fuel cons. l/hr*	Emission
320	429	1,940	UCD	on request	IMO-T2
350	469	2,000	HD	on request	IMO-T2

*Average fuel consumption according to ISO, see page 6.
Specifications / data subject to change without prior notice.

Product dimensions & dry weight

L (mm) : 1,465
W (mm) : 873
H (mm) : 1,331
Dry weight (kg) : 1,300

Dimensions and weight are based on standard configuration.

Propulsion - IMO Tier II / CCNR-2 / EU-3A
High speed - Engine

S6A3-MPTAW

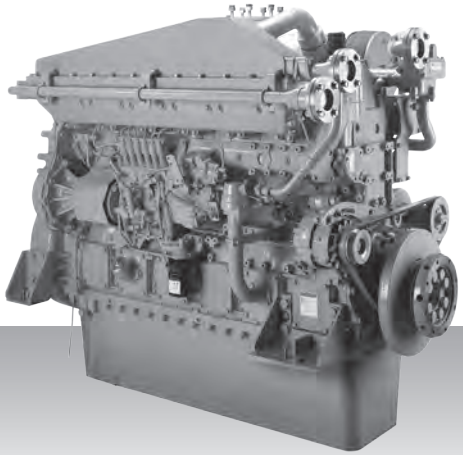

6-cylinder, 4-cycle, water cooled diesel engine,
wih direct-injection, turbocharger and air-cooler.

Bore x stroke (mm) : 150 x 175
Displacement (l) : 18.56

Commercial rating

kW	bhp	rpm	Rating	Fuel cons. l/hr*	Emission
221	296	1,530	UCD	on request	IMO-T2
360	483	1,840	UCD	65.7	IMO-T2 / CCNR-2
385	516	1,800	MD	on request	CCNR-2

*Average fuel consumption according to ISO, see page 6.
Specifications / data subject to change without prior notice.

Product dimensions & dry weight

L (mm) : 1,636
W (mm) : 1,036
H (mm) : 1,421
Dry weight (kg) : 1,900

Dimensions and weight are based on standard configuration.

Propulsion - IMO Tier II / CCNR-2 / EU-3A
High speed - Engine

S6R-(Z3)MPTAW

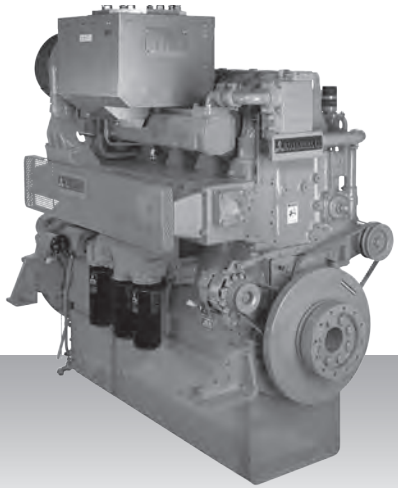

6-cylinder, 4-cycle, water cooled diesel engine,
wih direct-injection, turbocharger and air-cooler.

Bore x stroke (mm) : 170 x 180
Displacement (l) : 24.51

Commercial rating

kW	bhp	rpm	Rating	Fuel cons. l/hr*	Emission
324	434	1,600	UCD	on request	IMO-T2
447	599	1,600	UCD	on request	IMO-T2
470	630	1,600	UCD	80.5	IMO-T2 / EU-3A
520	697	1,650	HD	89.0	IMO-T2 / EU-3A
605	811	1,800	MD	on request	IMO-T2 / EU-3A

*Average fuel consumption according to ISO, see page 6.
Specifications / data subject to change without prior notice.

Product dimensions & dry weight

L (mm) : 1,786
W (mm) : 1,220
H (mm) : 1,650
Dry weight (kg) : 2,913

Dimensions and weight are based on standard configuration.

Propulsion - IMO Tier II / CCNR-2 / EU-3A
High speed - Engine

S6R2-T2MPTK

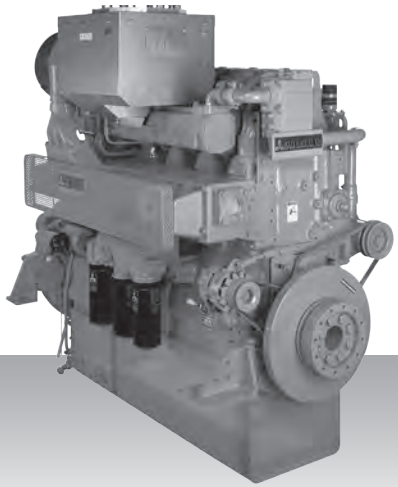

6-cylinder, 4-cycle, water cooled diesel engine,
wih direct-injection, turbocharger and air-cooler.

Bore x stroke (mm) : 170 x 220
Displacement (l) : 29.96

Commercial rating

kW	bhp	rpm	Rating	Fuel cons. l/hr*	Emission
324	435	1,350	UCD	on request	IMO-T2
380	510	1,350	UCD	on request	IMO-T2
395	530	1,350	UCD	on request	IMO-T2
423	567	1,350	UCD	on request	IMO-T2
480	644	1,350	UCD	79.9	IMO-T2
530	711	1,400	HD	88.7	IMO-T2
610	818	1,500	MD	101.5	IMO-T2

*Average fuel consumption according to ISO, see page 6.
Specifications / data subject to change without prior notice.

Product dimensions & dry weight

L (mm) : 2,207
W (mm) : 1,156
H (mm) : 1,695
Dry weight (kg) : 3,000

Dimensions and weight are based on standard configuration.

Propulsion - IMO Tier II / CCNR-2 / EU-3A
High speed - Engine

S6R2-T2MPTAW3M

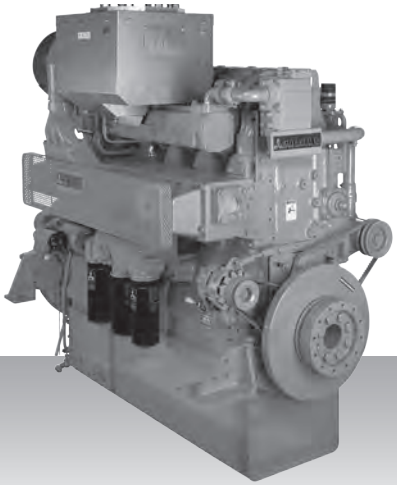

6-cylinder, 4-cycle, water cooled diesel engine,
wih direct-injection, turbocharger and air-cooler.

Bore x stroke (mm) : 170 x 220
Displacement (l) : 29.96

Commercial rating

kW	bhp	rpm	Rating	Fuel cons. l/hr*	Emission
480	644	1,350	HD	on request	IMO-T2
555	744	1,350	HD	on request	IMO-T2
645	865	1,400	HD	on request	IMO-T2
691	927	1,406	HD	on request	IMO-T2

*Average fuel consumption according to ISO, see page 6.
Specifications / data subject to change without prior notice.

Product dimensions & dry weight

L (mm) : 1,786
W (mm) : 1,220
H (mm) : 1,650
Dry weight (kg) : 2,913

Dimensions and weight are based on standard configuration.

Propulsion - IMO Tier II / CCNR-2 / EU-3A
High speed - Engine

S12A2-C2MPTK

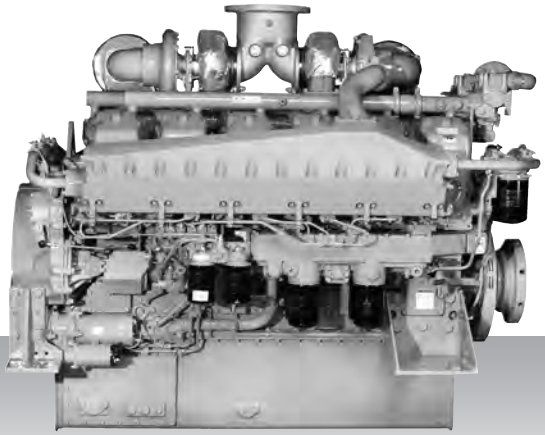

12-cylinder, 4-cycle, water cooled diesel engine,
wih direct-injection, turbocharger and air-cooler.

Bore x stroke (mm) : 150 x 160
Displacement (l) : 33.93

Commercial rating

kW	bhp	rpm	Rating	Fuel cons. l/hr*	Emission
634	850	1,940	UCD	111.9	IMO-T2 / CCNR-2

*Average fuel consumption according to ISO, see page 6.
Specifications / data subject to change without prior notice.

Product dimensions & dry weight

L (mm) : 1,948
W (mm) : 1,442
H (mm) : 1,596
Dry weight (kg) : 3,380

Dimensions and weight are based on standard configuration.

Propulsion - IMO Tier II / CCNR-2 / EU-3A
High speed - Engine

S12A2-(Z3)MPTAW

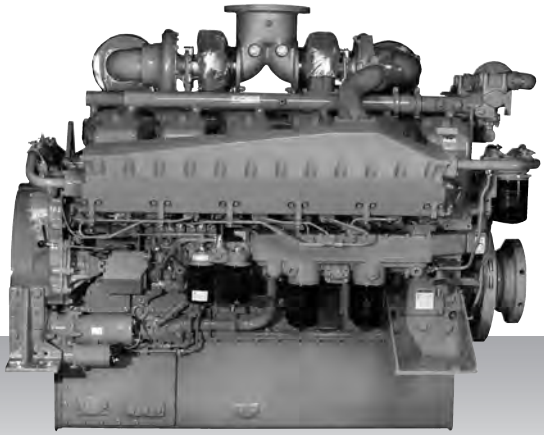

12-cylinder, 4-cycle, water cooled diesel engine,
wih direct-injection, turbocharger and air-cooler.

Bore x stroke (mm) : 150 x 160
Displacement (l) : 33.93

Commercial rating

kW	bhp	rpm	Rating	Fuel cons. l/hr*	Emission
701	940	1,940	UCD	119.0	IMO-T2 / EU-3A
776	1,041	2,000	HD	131.5	IMO-T2

*Average fuel consumption according to ISO, see page 6.
Specifications / data subject to change without prior notice.

Product dimensions & dry weight

L (mm) : 2,059
W (mm) : 1,654
H (mm) : 1,596
Dry weight (kg) : 3,840

Dimensions and weight are based on standard configuration.

Propulsion - IMO Tier II / CCNR-2 / EU-3A
High speed - Engine

S12R-(Z3)MPTAW

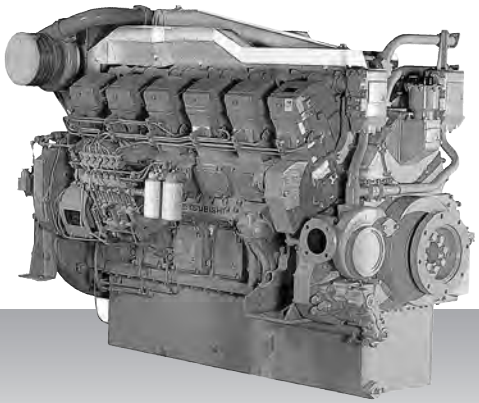

12-cylinder, 4-cycle, water cooled diesel engine,
wih direct-injection, turbocharger and air-cooler.

Bore x stroke (mm) : 170 x 180
Displacement (l) : 49.03

Commercial rating

kW	bhp	rpm	Rating	Fuel cons. l/hr*	Emission
588	789	1,400	UCD	on request	IMO-T2
696	933	1,500	UCD	on request	IMO-T2
749	1,004	1,500	UCD	on request	IMO-T2
749	1,004	1,600	UCD	on request	IMO-T2
940	1,261	1,600	UCD	160.5	IMO-T2 / EU-3A
1,040	1,395	1,650	HD	178.7	IMO-T2 / EU-3A

*Average fuel consumption according to ISO, see page 6.
Specifications / data subject to change without prior notice.

Product dimensions & dry weight

L (mm) : 2,416
W (mm) : 1,585
H (mm) : 1,807
Dry weight (kg) : 5,470

Dimensions and weight are based on standard configuration.

Propulsion - IMO Tier II / CCNR-2 / EU-3A
High speed - Engine

S16R-(Z3)MPTAW

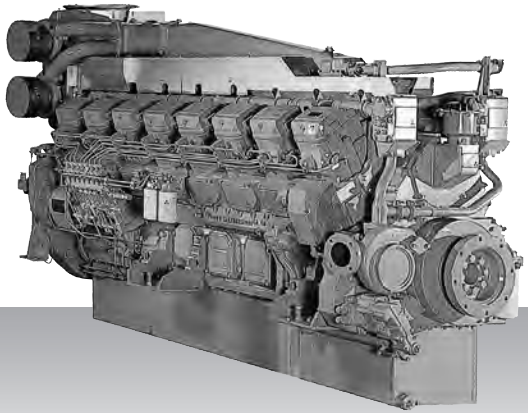

16-cylinder, 4-cycle, water cooled diesel engine,
wih direct-injection, turbocharger and air-cooler.

Bore x stroke (mm) : 170 x 180
Displacement (l) : 65.37

Commercial rating

kW	bhp	rpm	Rating	Fuel cons. l/hr*	Emission
1,250	1,676	1,600	UCD	214.1	IMO-T2 / EU-3A
1,380	1,851	1,650	HD	236.6	IMO-T2

*Average fuel consumption according to ISO, see page 6.
Specifications / data subject to change without prior notice.

Product dimensions & dry weight

L (mm) : 2,971
W (mm) : 1,585
H (mm) : 1,960
Dry weight (kg) : 6,950

Dimensions and weight are based on standard configuration.

Propulsion - IMO Tier II / CCNR-2 / EU-3A
High speed - Engine

S16R2-T2MPTAW

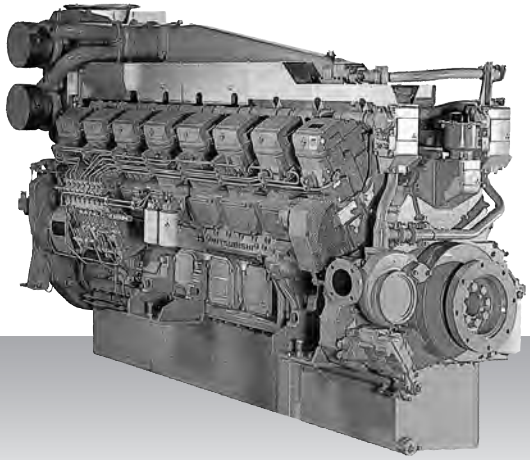

16-cylinder, 4-cycle, water cooled diesel engine,
wih direct-injection, turbocharger and air-cooler.

Bore x stroke (mm) : 170 x 220
Displacement (l) : 79.90

Commercial rating

kW	bhp	rpm	Rating	Fuel cons. l/hr*	Emission
1,450	1,944	1,350	UCD	on request	IMO-T2
1,600	2,146	1,400	HD	287.9	IMO-T2
1,885	2,528	1,500	MD	on request	IMO-T2

*Average fuel consumption according to ISO, see page 6.
Specifications / data subject to change without prior notice.

Product dimensions & dry weight

L (mm) : 2,946
W (mm) : 1,525
H (mm) : 2,030
Dry weight (kg) : 7,750

Dimensions and weight are based on standard configuration.

Propulsion - IMO Tier II / CCNR-2 / EU-3A
High speed - Propulsion package

S6B3-T2MPTK2

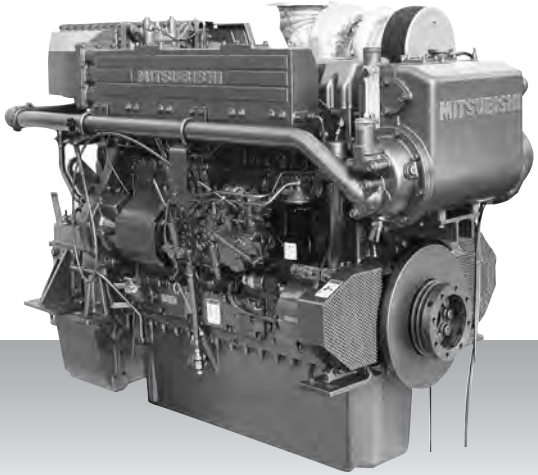

6-cylinder, 4-cycle, water cooled diesel engine, with direct-injection, turbocharger, air-cooler, built-up heat exchanger and sea water pump.

Bore x stroke (mm) : 135 x 170
Displacement (l) : 14.60

Commercial rating

kW	bhp	rpm	Rating	Fuel cons. l/hr*	Emission
378	507	2,001	HD	on request	IMO-T2
448	601	2,001	MD	77.9	IMO-T2

*Average fuel consumption according to ISO, see page 6.
Specifications / data subject to change without prior notice.

Product dimensions & dry weight

L (mm) : 1,967
W (mm) : 984
H (mm) : 1,330
Dry weight (kg) : 1,400

Dimensions and weight are based on standard configuration.

Propulsion - IMO Tier II / CCNR-2 / EU-3A
High speed - Propulsion package

S6A3-T2MPTK3

6-cylinder, 4-cycle, water cooled diesel engine, with direct-injection, turbocharger, air-cooler, built-up heat exchanger and sea water pump.

Bore x stroke (mm) : 150 x 175
Displacement (l) : 18.50

Commercial rating

kW	bhp	rpm	Rating	Fuel cons. l/hr*	Emission
502	673	1,900	HD	on request	IMO-T2
558	748	1,900	MD	on request	IMO-T2

*Average fuel consumption according to ISO, see page 6.
Specifications / data subject to change without prior notice.

Product dimensions & dry weight

L (mm) : 2,189
W (mm) : 1,127
H (mm) : 1,421
Dry weight (kg) : 2,100

Dimensions and weight are based on standard configuration.

Propulsion - IMO Tier II / CCNR-2 / EU-3A
High speed - Propulsion package

S6R-T2MPTK

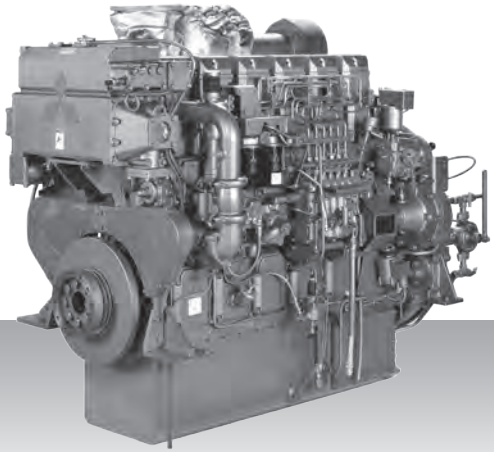

6-cylinder, 4-cycle, water cooled diesel engine, with direct-injection, turbocharger, air-cooler, built-up heat exchanger and sea water pump.

Bore x stroke (mm) : 170 x 180
Displacement (l) : 24.51

Commercial rating

kW	bhp	rpm	Rating	Fuel cons. l/hr*	Emission
470	630	1,600	UCD	79.6	IMO-T2
520	697	1,650	HD	88.6	IMO-T2
605	811	1,800	MD	103.8	IMO-T2

*Average fuel consumption according to ISO, see page 6.
Specifications / data subject to change without prior notice.

Product dimensions & dry weight

L (mm) : 2,122
W (mm) : 1,202
H (mm) : 1,615
Dry weight (kg) : 2,950

Dimensions and weight are based on standard configuration.

Propulsion - IMO Tier II / CCNR-2 / EU-3A
High speed - Propulsion package

S6R2-T2MPTK

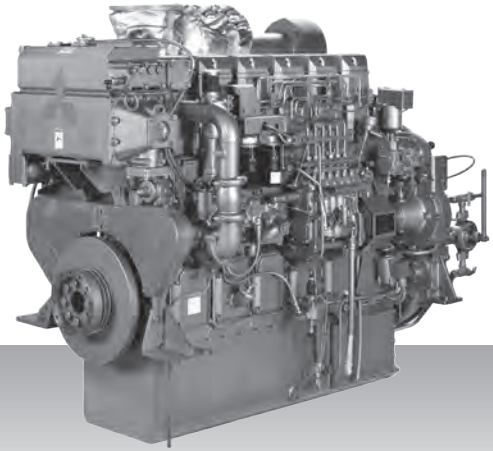

6-cylinder, 4-cycle, water cooled diesel engine, with direct-injection, turbocharger, air-cooler, built-up heat exchanger and sea water pump.

Bore x stroke (mm) : 170 x 220
Displacement (l) : 29.96

Commercial rating

kW	bhp	rpm	Rating	Fuel cons. l/hr*	Emission
480	643	1,350	UCD	79.9	IMO-T2
530	711	1,400	HD	88.7	IMO-T2
610	818	1,500	MD	101.5	IMO-T2

*Average fuel consumption according to ISO, see page 6.
Specifications / data subject to change without prior notice.

Product dimensions & dry weight

L (mm) : 2,207
W (mm) : 1,156
H (mm) : 1,695
Dry weight (kg) : 3,000

Dimensions and weight are based on standard configuration.

Propulsion - IMO Tier II / CCNR-2 / EU-3A
High speed - Propulsion package

S6R2-T2MPTK3

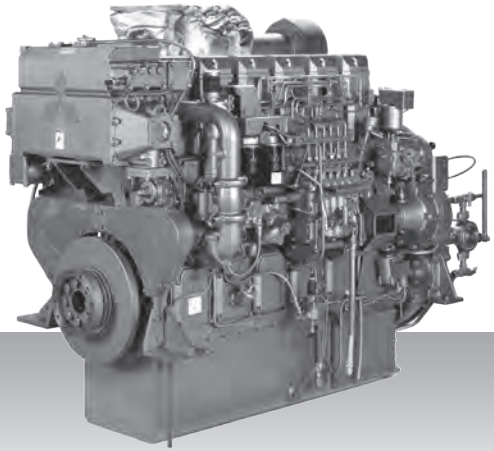

6-cylinder, 4-cycle, water cooled diesel engine, with direct-injection, turbocharger, air-cooler, built-up heat exchanger and sea water pump.

Bore x stroke (mm) : 170 x 220
Displacement (l) : 29.96

Commercial rating

kW	bhp	rpm	Rating	Fuel cons. l/hr*	Emission
691	927	1,406	HD	112.7	IMO-T2
759	1,018	1,406	MD	122.3	IMO-T2

*Average fuel consumption according to ISO, see page 6.
Specifications / data subject to change without prior notice.

Product dimensions & dry weight

L (mm) : 2,105
W (mm) : 1,183
H (mm) : 1,695
Dry weight (kg) : 3,130

Dimensions and weight are based on standard configuration.

Propulsion - IMO Tier II / CCNR-2 / EU-3A
High speed - Propulsion package

S12A2-T2MPTK

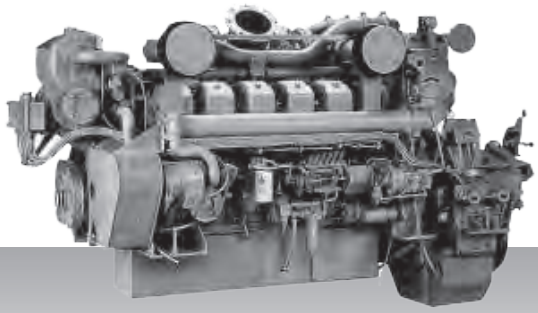

12-cylinder, 4-cycle, water cooled diesel engine, with direct-injection, turbocharger, air-cooler, built-up heat exchanger and sea water pump.

Bore x stroke (mm) : 150 x 160
Displacement (l) : 33.93

Commercial rating

kW	bhp	rpm	Rating	Fuel cons. l/hr*	Emission
701	940	1,800	UCD	121.9	IMO-T2
776	1,041	1,860	HD	134.4	IMO-T2
858	1,151	1,920	MD	150.1	IMO-T2

*Average fuel consumption according to ISO, see page 6.
Specifications / data subject to change without prior notice.

Product dimensions & dry weight

L (mm) : 2,439
W (mm) : 1,482
H (mm) : 1,596
Dry weight (kg) : 3,820

Dimensions and weight are based on standard configuration.

Propulsion - IMO Tier II / CCNR-2 / EU-3A
High speed - Propulsion package

S12R-T2MPTK

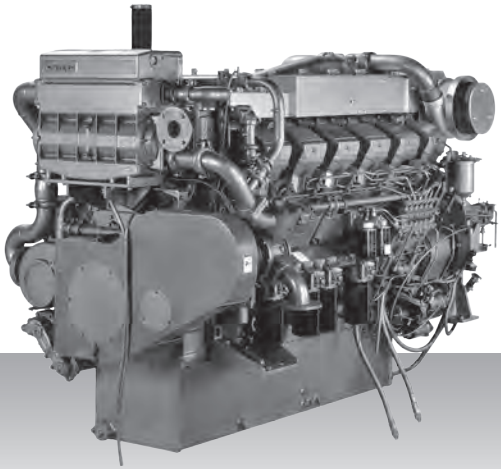

12-cylinder, 4-cycle, water cooled diesel engine, with direct-injection, turbocharger, air-cooler, built-up heat exchanger and sea water pump.

Bore x stroke (mm) : 170 x 180
Displacement (l) : 49.03

Commercial rating

kW	bhp	rpm	Rating	Fuel cons. l/hr*	Emission
940	1,261	1,600	UCD	155.9	IMO-T2
1,040	1,395	1,650	HD	173.0	IMO-T2
1,210	1,623	1,800	MD	203.6	IMO-T2

*Average fuel consumption according to ISO, see page 6.
Specifications / data subject to change without prior notice.

Product dimensions & dry weight

L (mm) : 2,556
W (mm) : 1,622
H (mm) : 1,728
Dry weight (kg) : 5,500

Dimensions and weight are based on standard configuration.

Propulsion - IMO Tier II / CCNR-2 / EU-3A
High speed - Propulsion package

S16R-T2MPTK

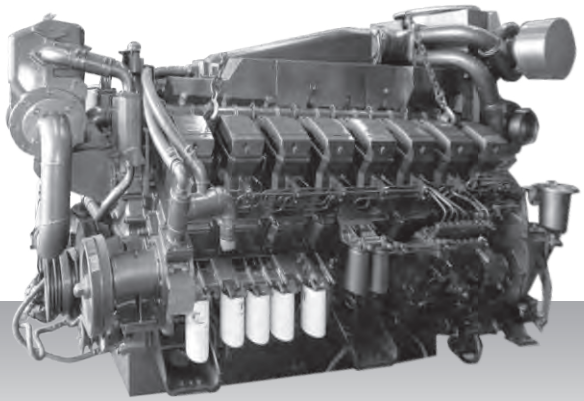

16-cylinder, 4-cycle, water cooled diesel engine, with direct-injection, turbocharger, air-cooler, built-up heat exchanger and sea water pump.

Bore x stroke (mm) : 170 x 180
Displacement (l) : 65.37

Commercial rating

kW	bhp	rpm	Rating	Fuel cons. l/hr*	Emission
1,250	1,676	1,600	UCD	207.3	IMO-T2
1,380	1,851	1,650	HD	229.5	IMO-T2
1,610	2,159	1,800	MD	271.7	IMO-T2

*Average fuel consumption according to ISO, see page 6.
Specifications / data subject to change without prior notice.

Product dimensions & dry weight

L (mm) : 3,086
W (mm) : 1,622
H (mm) : 1,960
Dry weight (kg) : 7,000

Dimensions and weight are based on standard configuration.

Propulsion - IMO Tier II / CCNR-2 / EU-3A
High speed - Propulsion package

S16R2-T2MPTK

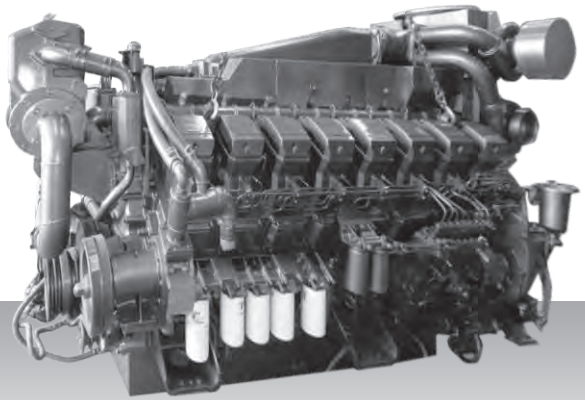

16-cylinder, 4-cycle, water cooled diesel engine, with direct-injection, turbocharger, air-cooler, built-up heat exchanger and sea water pump.

Bore x stroke (mm) : 170 x 220
Displacement (l) : 79.90

Commercial rating

kW	bhp	rpm	Rating	Fuel cons. l/hr*	Emission
1,450	1,944	1,350	UCD	on request	IMO-T2
1,600	2,156	1,400	HD	on request	IMO-T2
1,885	2,528	1,500	MD	on request	IMO-T2

*Average fuel consumption according to ISO, see page 6.
Specifications / data subject to change without prior notice.

Product dimensions & dry weight

L (mm) : 3,065
W (mm) : 1,622
H (mm) : 2,030
Dry weight (kg) : 8,000

Dimensions and weight are based on standard configuration.

Propulsion - IMO Tier II / CCNR-2
Medium speed

S6U-C2MPTK

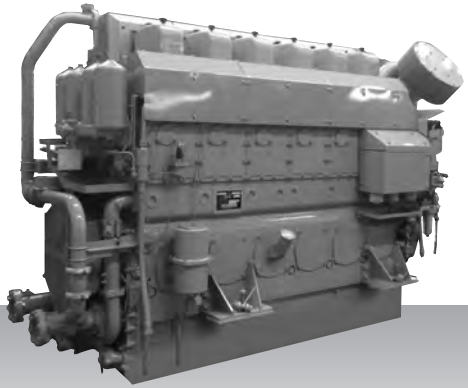

6-cylinder, 4-cycle, water cooled diesel engine,
wih direct-injection, turbocharger and air-cooler.

Bore x stroke (mm) : 240 x 260
Displacement (l) : 70.57

Commercial rating

kW	bhp	rpm	Rating	Fuel Cons. g/kWh*	Emission
680	912	1,100	HD	on request	IMO-T2
719	964	1,100	HD	on request	IMO-T2
749	1,004	1,100	HD	on request	IMO-T2
1,007	1,350	1,060	HD	200.0	IMO-T2 / CCNR-2
1,103	1,479	1,150	HD-T	200.0	IMO-T2 / CCNR-2
1,119	1,499	1,100	MD	200.0	IMO-T2 / CCNR-2

*Fuel consumption value at 100% rated power in g/kWh.
Specifications / data subject to change without prior notice.

Product dimensions & dry weight

L (mm) : 3,211
W (mm) : 1,429
H (mm) : 2,104
Dry weight (kg) : 8,400

Dimensions and weight are based on standard configuration.

Propulsion - IMO Tier II / CCNR-2
Medium speed

S6U2-MPTK

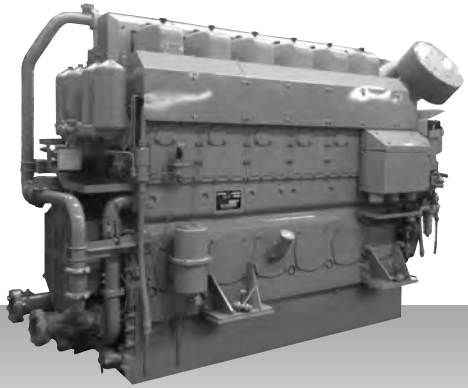

6-cylinder, 4-cycle, water cooled diesel engine,
with direct-injection, turbocharger, air-cooler,

Bore x stroke (mm) : 240 × 300
Displacement (l) : 81.43

Commercial rating

kW	bhp	rpm	Rating	Fuel Cons. g/kWh*	Emission
1,040	1,395	930	HD	194.0	IMO-T2 / CCNR-2
1,156	1,550	960	MD	194.0	IMO-T2 / CCNR-2

*Fuel consumption value at 100% rated power in g/kWh.
Specifications / data subject to change without prior notice.

Product dimensions & dry weight

L (mm) : 3,226
W (mm) : 1,429
H (mm) : 2,177
Dry weight (kg) : 8,600

Dimensions and weight are based on standard configuration.

Propulsion - IMO Tier II / CCNR-2
Medium speed

S8U-C2MPTK

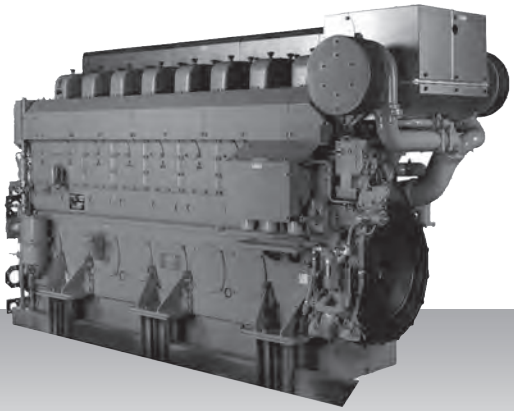

8-cylinder, 4-cycle, water cooled diesel engine,
with direct-injection, turbocharger, air-cooler,.

Bore x stroke (mm) : 240 x 260
Displacement (l) : 94.10

Commercial rating

kW	bhp	rpm	Rating	Fuel Cons. g/kWh*	Emission
1,343	1,801	1,060	HD	204.0	IMO-T2 / CCNR-2
1,470	1,971	1,150	HD-T	204.0	IMO-T2 / CCNR-2
1,492	2,001	1,100	MD	204.0	IMO-T2 / CCNR-2

*Fuel consumption value at 100% rated power in g/kWh.
Specifications / data subject to change without prior notice.

Product dimensions & dry weight

L (mm) : 4,065
W (mm) : 1,539
H (mm) : 2,192
Dry weight (kg) : 11,000

Dimensions and weight are based on standard configuration.

Propulsion - IMO Tier II / CCNR-2
Medium speed

S12U-MPTK

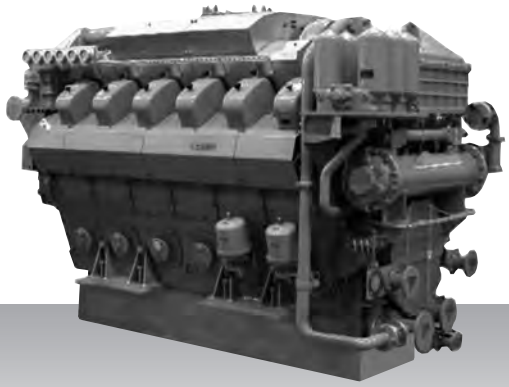

12-cylinder, 4-cycle, water cooled diesel engine,
wih direct-injection, turbocharger and air-cooler.

Bore x stroke (mm) : 240 x 260
Displacement (l) : 141.15

Commercial rating

kW	bhp	rpm	Rating	Fuel Cons. g/kWh*	Emission
2,014	2,701	1,060	HD	200.0	IMO-T2
2,205	2,957	1,150	HD-T	200.0	IMO-T2
2,238	3,001	1,100	MD	200.0	IMO-T2

*Fuel consumption value at 100% rated power in g/kWh.
Specifications / data subject to change without prior notice.

Product dimensions & dry weight

L (mm) : 3,562
W (mm) : 1,910
H (mm) : 2,374
Dry weight (kg) : 16,600

Dimensions and weight are based on standard configuration.

Propulsion - IMO Tier II / CCNR-2
Medium speed

S16U-C2MPTK

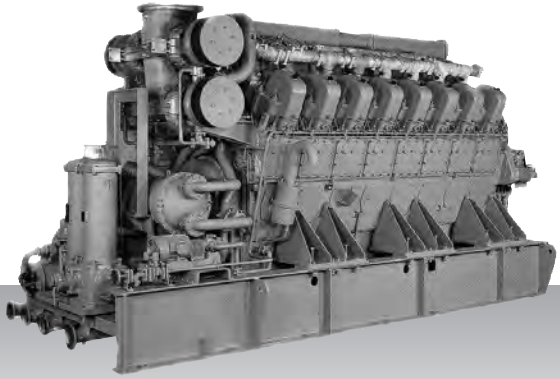

16-cylinder, 4-cycle, water cooled diesel engine,
wih direct-injection, turbocharger and air-cooler.

Bore x stroke (mm) : 240 x 260
Displacement (l) : 188.19

Commercial rating

kW	bhp	rpm	Rating	Fuel Cons. g/kWh*	Emission
2,686	3,602	1,060	HD	204.0	IMO-T2
2,940	3,943	1,150	HD-T	204.0	IMO-T2
2,984	4,002	1,100	MD	204.0	IMO-T2

*Fuel consumption value at 100% rated power in g/kWh.
Specifications / data subject to change without prior notice.

Product dimensions & dry weight

L (mm) : 4,628
W (mm) : 1,710
H (mm) : 2,473
Dry weight (kg) : 20,500

Dimensions and weight are based on standard configuration.

Diesel-electric propulsion specifications

Offshore support vessel - GloMar Wave
Partner - Koedood Dieselservice B.V.

ENGINE MODEL LINE-UP - MARINE DIESEL-ELECTRIC PROPULSION

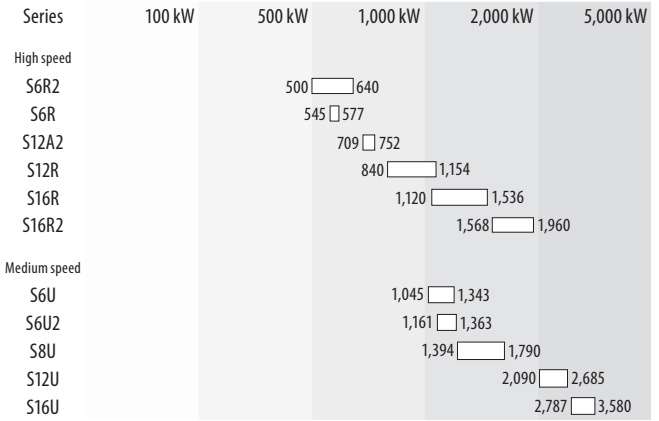

Diesel-electric propulsion products - IMO Tier II - High speed

Engine model	kW	bhp	rpm	Hz	Emission	Page
50 Hz						
S6R-MPTAW	545	731	1,500	50	IMO-T2	54
S6R2-T2MPTK	640	858	1,500	50	IMO-T2	55
S12A2-MPTAW	709	951	1,500	50	IMO-T2	56
S12R-MPTAW	1,120	1,502	1,500	50	IMO-T2	57
S16R-MPTAW	1,500	2,012	1,500	50	IMO-T2	58
S16R2-T2MPTAW	1,960	2,628	1,500	50	IMO-T2	59
60 Hz						
S6R-MPTAW	577	774	1,800	60	IMO-T2	54
S6R2-T2MPTK	500	671	1,200	60	IMO-T2	55
S12A2-MPTAW	752	1,008	1,800	60	IMO-T2	56
S12R-MPTAW	840	1,126	1,200	60	IMO-T2	57
S12R-MPTAW	1,154	1,548	1,800	60	IMO-T2	57
S16R-MPTAW	1,120	1,502	1,200	60	IMO-T2	58
S16R-MPTAW	1,536	2,060	1,800	60	IMO-T2	58
S16R2-T2MPTAW	1,568	2,103	1,200	60	IMO-T2	59

Diesel-electric propulsion products - IMO Tier II - Medium speed

Engine model	kW	bhp	rpm	Hz	Emission	Page
50 Hz						
S6U-MPTK	1,142	1,531	1,000	50	IMO-T2	60
S6U-MPTK	1,270	1,703	1,000	50	IMO-T2	60
S6U2-MPTK	1,234	1,655	1,000	50	IMO-T2	61
S6U2-MPTK	1,363	1,828	1,000	50	IMO-T2	61
S8U-MPTK	1,522	2,041	1,000	50	IMO-T2	62
S8U-MPTK	1,693	2,270	1,000	50	IMO-T2	62
S12U-MPTK	2,283	3,062	1,000	50	IMO-T2	63
S12U-MPTK	2,541	3,408	1,000	50	IMO-T2	63
S16U-MPTK	3,045	4,083	1,000	50	IMO-T2	64
S16U-MPTK	3,388	4,543	1,000	50	IMO-T2	64
60 Hz						
S6U-MPTK	1,045	1,401	900	60	IMO-T2	60
S6U-MPTK	1,205	1,616	1,200	60	IMO-T2	60
S6U-MPTK	1,150	1,542	900	60	IMO-T2	60
S6U-MPTK	1,343	1,801	1,200	60	IMO-T2	60
S6U2-MPTK	1,161	1,557	900	60	IMO-T2	61
S6U2-MPTK	1,250	1,676	900	60	IMO-T2	61
S8U-MPTK	1,394	1,869	900	60	IMO-T2	62
S8U-MPTK	1,608	2,156	1,200	60	IMO-T2	62
S8U-MPTK	1,533	2,056	900	60	IMO-T2	62
S8U-MPTK	1,790	2,400	1,200	60	IMO-T2	62
S12U-MPTK	2,090	2,803	900	60	IMO-T2	63
S12U-MPTK	2,412	3,235	1,200	60	IMO-T2	63
S12U-MPTK	2,299	3,083	900	60	IMO-T2	63
S12U-MPTK	2,685	3,601	1,200	60	IMO-T2	63
S16U-MPTK	2,787	3,737	900	60	IMO-T2	64
S16U-MPTK	3,215	4,311	1,200	60	IMO-T2	64
S16U-MPTK	3,065	4,110	900	60	IMO-T2	64
S16U-MPTK	3,580	4,801	1,200	60	IMO-T2	64

Diesel-electric propulsion - IMO Tier II
High speed

S6R-MPTAW

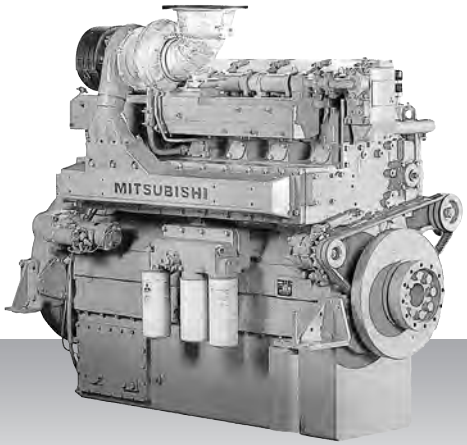

6-cylinder, 4-cycle, water cooled diesel engine,
wih direct-injection, turbocharger and air-cooler.

Bore x stroke (mm) : 170 x 180
Displacement (l) : 24.51

Commercial rating

kW	bhp	rpm	Hz	Fuel cons. l/hr*	Emission
545	731	1,500	50	65.1	IMO-T2
577	774	1,800	60	on request	IMO-T2

*Average fuel consumption according to ISO, see page 6.
Specifications / data subject to change without prior notice.

Product dimensions & dry weight

L (mm) : 1,786
W (mm) : 1,220
H (mm) : 1,650
Dry weight (kg) : 2,913

Dimensions and weight are based on standard configuration.

Diesel-electric propulsion - IMO Tier II
High speed

S6R2-T2MPTK

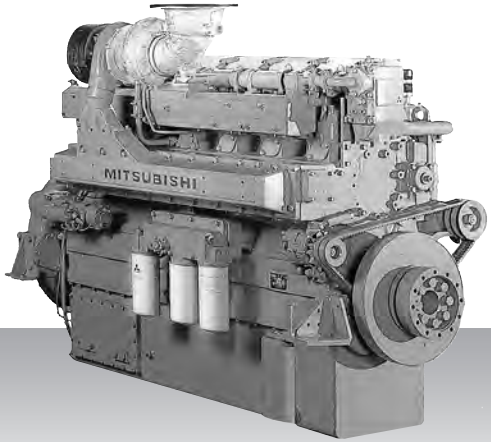

6-cylinder, 4-cycle, water cooled diesel engine,
wih direct-injection, turbocharger and air-cooler.

Bore x stroke (mm) : 170 x 220
Displacement (l) : 29.96

Commercial rating

kW	bhp	rpm	Hz	Fuel cons. l/hr*	Emission
500	671	1,200	60	58.6	IMO-T2
640	858	1,500	50	78.4	IMO-T2

*Average fuel consumption according to ISO, see page 6.
Specifications / data subject to change without prior notice.

Product dimensions & dry weight

L (mm) : 1,811
W (mm) : 1,108
H (mm) : 1,694
Dry weight (kg) : 2,960

Dimensions and weight are based on standard configuration.

Diesel-electric propulsion - IMO Tier II
High speed

S12A2-MPTAW

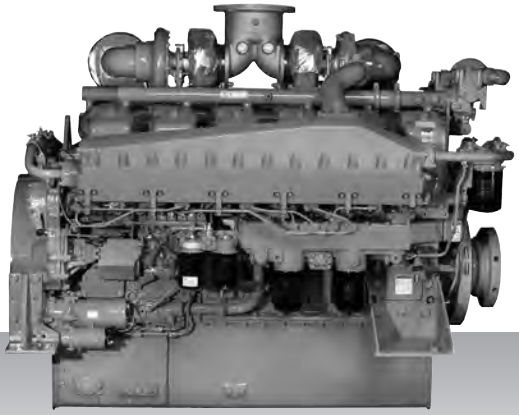

12-cylinder, 4-cycle, water cooled diesel engine,
wih direct-injection, turbocharger and air-cooler.

Bore x stroke (mm) : 150 x 160
Displacement (l) : 33.93

Commercial rating

kW	bhp	rpm	Hz	Fuel cons. l/hr*	Emission
709	951	1,500	50	85.0	IMO-T2
752	1,008	1,800	60	on request	IMO-T2

*Average fuel consumption according to ISO, see page 6.
Specifications / data subject to change without prior notice.

Product dimensions & dry weight

L (mm) : 2,059
W (mm) : 1,654
H (mm) : 1,596
Dry weight (kg) : 3,840

Dimensions and weight are based on standard configuration.

Diesel-electric propulsion - IMO Tier II
High speed

S12R-MPTAW

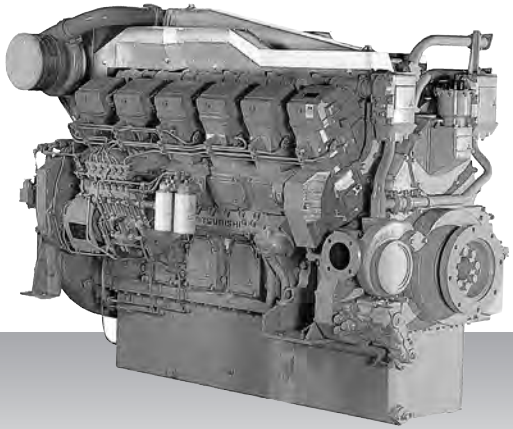

12-cylinder, 4-cycle, water cooled diesel engine,
wih direct-injection, turbocharger and air-cooler.

Bore x stroke (mm) : 170 x 180
Displacement (l) : 49.03

Commercial rating

kW	bhp	rpm	Hz	Fuel cons. l/hr*	Emission
840	1,126	1,200	60	on request	IMO-T2
1,120	1,502	1,500	50	on request	IMO-T2
1,154	1,548	1,800	60	on request	IMO-T2

*Average fuel consumption according to ISO, see page 6.
Specifications / data subject to change without prior notice.

Product dimensions & dry weight

L (mm) : 2,416
W (mm) : 1,585
H (mm) : 1,807
Dry weight (kg) : 5,470

Dimensions and weight are based on standard configuration.

Diesel-electric propulsion - IMO Tier II
High speed

S16R-MPTAW

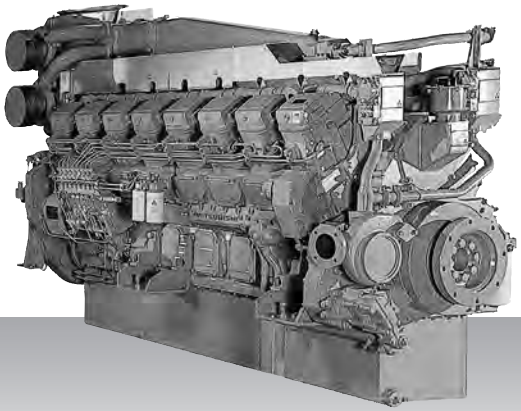

16-cylinder, 4-cycle, water cooled diesel engine,
wih direct-injection, turbocharger and air-cooler.

Bore x stroke (mm) : 170 x 180
Displacement (l) : 65.37

Commercial rating

kW	bhp	rpm	Hz	Fuel cons. l/hr*	Emission
1,120	1,502	1,200	60	on request	IMO-T2
1,500	2,012	1,500	50	on request	IMO-T2
1,536	2,060	1,800	60	on request	IMO-T2

*Average fuel consumption according to ISO, see page 6.
Specifications / data subject to change without prior notice.

Product dimensions & dry weight

L (mm) : 2,971
W (mm) : 1,585
H (mm) : 1,960
Dry weight (kg) : 6,950

Dimensions and weight are based on standard configuration.

Diesel-electric propulsion - IMO - Tier II
High speed

S16R2-T2MPTAW

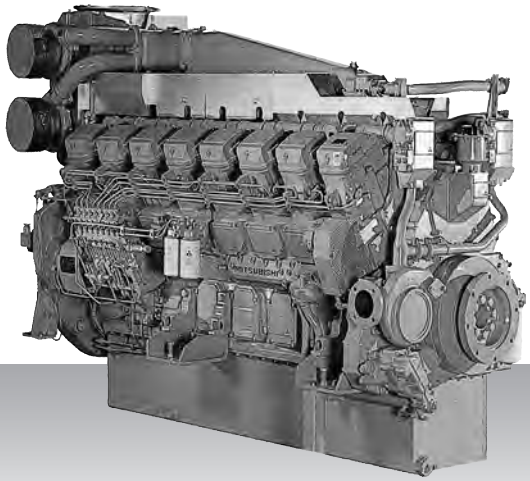

16-cylinder, 4-cycle, water cooled diesel engine,
wih direct-injection, turbocharger and air-cooler.

Bore x stroke (mm) : 170 x 220
Displacement (l) : 79.90

Commercial rating

kW	bhp	rpm	Hz	Fuel cons. l/hr*	Emission
1,568	2,103	1,200	60	284.5	IMO-T2
1,960	2,628	1,500	50	360.6	IMO-T2

*Average fuel consumption according to ISO, see page 6.
Specifications / data subject to change without prior notice.

Product dimensions & dry weight

L (mm) : 2,946
W (mm) : 1,525
H (mm) : 2,030
Dry weight (kg) : 7,750

Dimensions and weight are based on standard configuration.

Diesel-electric propulsion - IMO Tier II
Medium speed

S6U-MPTK

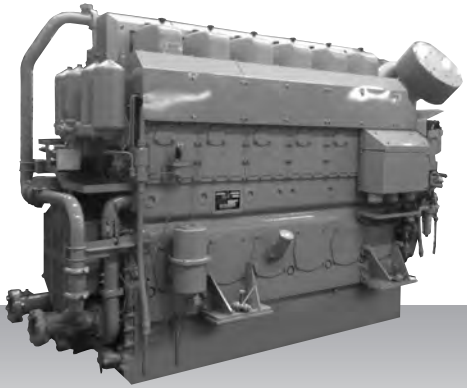

6-cylinder, 4-cycle, water cooled diesel engine,
wih direct-injection, turbocharger and air-cooler.

Bore x stroke (mm) : 240 x 260
Displacement (l) : 70.57

Commercial rating

Operation	kW	bhp	rpm	Hz	Fuel cons. g/kWh*	Emission
Continuous	1,045	1,401	900	60	on request	IMO-T2
	1,142	1,531	1,000	50	on request	IMO-T2
	1,205	1,616	1,200	60	on request	IMO-T2
Intermittent	1,150	1,542	900	60	on request	IMO-T2
	1,270	1,703	1,000	50	on request	IMO-T2
	1,343	1,801	1,200	60	on request	IMO-T2

*Fuel consumption value at 100% rated power in g/kWh.
Specifications / data subject to change without prior notice.

Product dimensions & dry weight

L (mm) : 3,211
W (mm) : 1,429
H (mm) : 2,104
Dry weight (kg) : 8,400

Dimensions and weight are based on standard configuration.

Diesel-electric propulsion - IMO Tier II
Medium speed

S6U2-MPTK

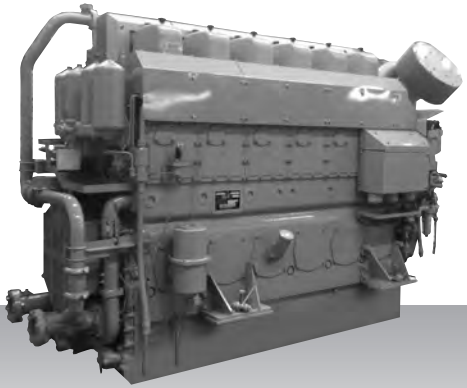

6-cylinder, 4-cycle, water cooled diesel engine,
wih direct-injection, turbocharger and air-cooler.

Bore x stroke (mm) : 240 x 300
Displacement (l) : 81.43

Commercial rating

Operation	kW	bhp	rpm	Hz	Fuel cons. g/kWh*	Emission
Continuous	1,161	1,557	900	60	on request	IMO-T2
	1,234	1,655	1,000	50	on request	IMO-T2
Intermittent	1,250	1,676	900	60	on request	IMO-T2
	1,363	1,828	1,000	50	on request	IMO-T2

*Fuel consumption value at 100% rated power in g/kWh.
Specifications / data subject to change without prior notice.

Product dimensions & dry weight

L (mm) : 3,226
W (mm) : 1,429
H (mm) : 2,177
Dry weight (kg) : 8,600

Dimensions and weight are based on standard configuration.

Diesel-electric propulsion - IMO Tier II
Medium speed

S8U-MPTK

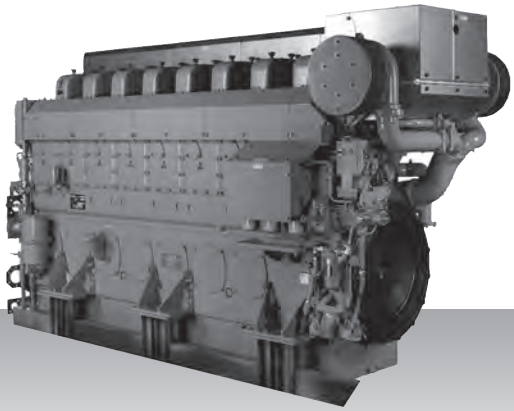

8-cylinder, 4-cycle, water cooled diesel engine,
with direct-injection, turbocharger, air-cooler,.

Bore x stroke (mm) : 240 x 260
Displacement (l) : 94.10

Commercial rating

Operation	kW	bhp	rpm	Hz	Fuel cons. g/kWh*	Emission
Continuous	1,394	1,869	900	60	on request	IMO-T2
	1,522	2,041	1,000	50	on request	IMO-T2
	1,608	2,156	1,200	60	on request	IMO-T2
Intermittent	1,533	2,056	900	60	on request	IMO-T2
	1,693	2,270	1,000	50	on request	IMO-T2
	1,790	2,400	1,200	60	on request	IMO-T2

*Fuel consumption value at 100% rated power in g/kWh.
Specifications / data subject to change without prior notice.

Product dimensions & dry weight

L (mm) : 4,065
W (mm) : 1,539
H (mm) : 2,192
Dry weight (kg) : 11,000

Dimensions and weight are based on standard configuration.

Diesel-electric propulsion - IMO Tier II
Medium speed

S12U-MPTK

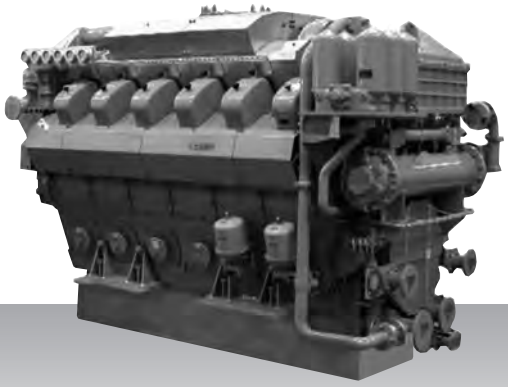

12-cylinder, 4-cycle, water cooled diesel engine,
wih direct-injection, turbocharger and air-cooler.

Bore x stroke (mm) : 240 x 260
Displacement (l) : 141.15

Commercial rating

Operation	kW	bhp	rpm	Hz	Fuel cons. g/kWh*	Emission
Continuous	2,090	2,803	900	60	on request	IMO-T2
	2,283	3,062	1,000	50	on request	IMO-T2
	2,412	3,235	1,200	60	on request	IMO-T2
Intermittent	2,299	3,083	900	60	on request	IMO-T2
	2,541	3,408	1,000	50	on request	IMO-T2
	2,685	3,601	1,200	60	on request	IMO-T2

*Fuel consumption value at 100% rated power in g/kWh.
Specifications / data subject to change without prior notice.

Product dimensions & dry weight

L (mm) : 3,562
W (mm) : 1,910
H (mm) : 2,374
Dry weight (kg) : 16,600

Dimensions and weight are based on standard configuration.

Diesel-electric propulsion - IMO Tier II
Medium speed

S16U-MPTK

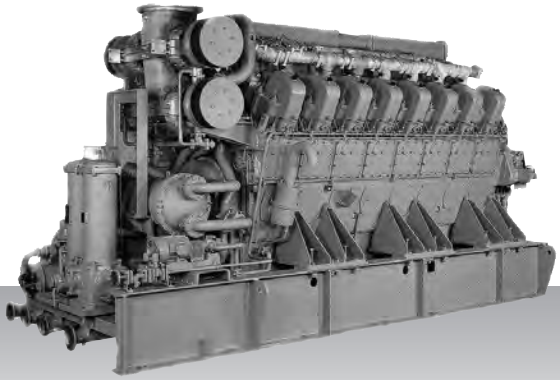

16-cylinder, 4-cycle, water cooled diesel engine,
wih direct-injection, turbocharger and air-cooler.

Bore x stroke (mm) : 240 x 260
Displacement (l) : 188.19

Commercial rating

Operation	kW	bhp	rpm	Hz	Fuel cons. g/kWh*	Emission
Continuous	2,787	3,737	900	60	on request	IMO-T2
	3,045	4,083	1,000	50	on request	IMO-T2
	3,215	4,311	1,200	60	on request	IMO-T2
Intermittent	3,065	4,110	900	60	on request	IMO-T2
	3,388	4,543	1,000	50	on request	IMO-T2
	3,580	4,801	1,200	60	on request	IMO-T2

*Fuel consumption value at 100% rated power in g/kWh.
Specifications / data subject to change without prior notice.

Product dimensions & dry weight

L (mm) : 4,628
W (mm) : 1,710
H (mm) : 2,473
Dry weight (kg) : 20,500

Dimensions and weight are based on standard configuration.

Auxiliary generator specifications

Fishing vessel - Skagøysund
Partner - Mitsubishi Turbocharger and Engine Europe B.V.
Norwegian Branch Office, Marine and Power Solutions

ENGINE MODEL LINE-UP - MARINE AUXILIARY GENERATOR

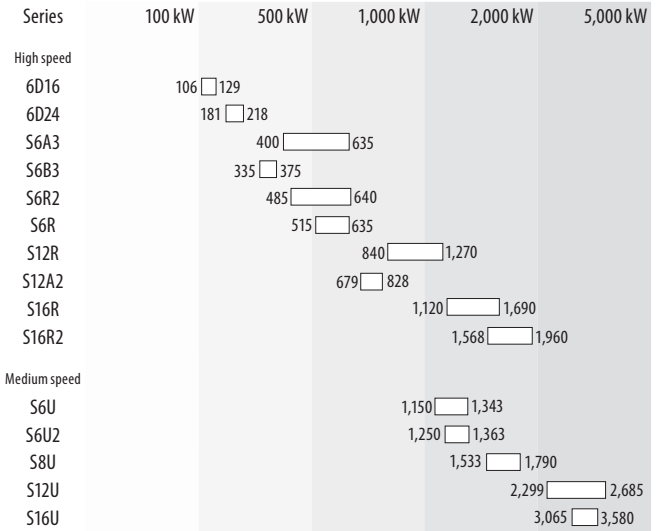

Auxiliary generator products - IMO Tier I / non emission - High speed

Engine model	kW	bhp	rpm	Hz	Emission	Page
50 Hz						
6D16-T	106	142	1,500	50	not regulated	68
6D24-T	169	227	1,500	50	non emission	69
6D24-TC	181	243	1,500	50	IMO-T1	69
S6B3-MPTA	335	449	1,500	50	IMO-T1	70
S6A3-MPTA	400	536	1,500	50	IMO-T1	71
S6R-MPTA	515	691	1,500	50	IMO-T1	72
S6R2-MPTA	595	798	1,500	50	IMO-T1	73
S12A2-MPTA	679	911	1,500	50	IMO-T1	74
S12R-MPTA	1,110	1,489	1,500	50	IMO-T1	75
S16R-MPTA	1,480	1,985	1,500	50	IMO-T1	76
60 Hz						
6D16-T	129	173	1,800	60	not regulated	68
6D24-T	195	262	1,800	60	non emission	69
6D24-TC	218	292	1,800	60	IMO-T1	69
S6B3-MPTA	375	503	1,800	60	IMO-T1	70
S6A3-MPTA	460	617	1,800	60	IMO-T1	71
S6R-MPTA	595	798	1,800	60	IMO-T1	72
S6R2-MPTA	485	650	1,200	60	IMO-T1	73
S12A2-MPTA	761	1,021	1,800	60	IMO-T1	74
S12R-MPTA	1,190	1,596	1,800	60	IMO-T1	75
S16R-MPTA	1,590	2,132	1,800	60	IMO-T1	76

Auxiliary generator products - IMO Tier II / CCNR-2 / EU-3A - High speed

Engine model	kW	bhp	rpm	Hz	Emission	Page
50 Hz						
6D16-T	106	142	1,500	50	not regulated for IMO-T2	77
6D24-TC	181	243	1,500	50	IMO-T2	78
S6B3-T2MPTAW	335	449	1,500	50	IMO-T2	79
S6R-(Z3)MPTAW	545	731	1,500	50	IMO-T2	80
S6R2-T2MPTK	640	858	1,500	50	IMO-T2	81
S12A2-MPTAW	709	951	1,500	50	IMO-T2	82
S12R-MPTAW	1,120	1,502	1,500	50	IMO-T2	83
S16R-MPTAW	1,500	2,012	1,500	50	IMO-T2	84
S16R2-T2MPTAW	1,960	2,628	1,500	50	IMO-T2	85
60 Hz						
6D16-T	129	173	1,800	60	not regulated for IMO-T2	77
6D24-TC	218	292	1,800	60	IMO-T2	78
S6B3-T2MPTAW	375	503	1,800	60	IMO-T2	79
S6R-(Z3)MPTAW	635	852	1,800	60	IMO-T2 / EU-3A	80
S6R2-T2MPTK	500	671	1,200	60	IMO-T2	81
S12A2-MPTAW	828	1,110	1,800	60	IMO-T2	82
S12R-MPTAW	840	1,126	1,200	60	IMO-T2	83
S12R-MPTAW	1,270	1,703	1,800	60	IMO-T2	83
S16R-MPTAW	1,120	1,502	1,200	60	IMO-T2	84
S16R-MPTAW	1,690	2,266	1,800	60	IMO-T2	84
S16R2-T2MPTAW	1,568	2,103	1,200	60	IMO-T2	85

Auxiliary generator products - IMO Tier II - Medium speed

Engine model	kW	bhp	rpm	Hz	Emission	Page
50 Hz						
S6U-MPTK	1,270	1,703	1,000	50	IMO-T2	86
S6U2-MPTK	1,363	1,828	1,000	50	IMO-T2	87
S8U-MPTK	1,693	2,270	1,000	50	IMO-T2	88
S12U-MPTK	2,541	3,408	1,000	50	IMO-T2	89
S16U-MPTK	3,388	4,543	1,000	50	IMO-T2	90
60 Hz						
S6U-MPTK	1,150	1,542	900	60	IMO-T2	86
S6U-MPTK	1,343	1,801	1,200	60	IMO-T2	86
S6U2-MPTK	1,250	1,676	900	60	IMO-T2	87
S8U-MPTK	1,533	2,056	900	60	IMO-T2	88
S8U-MPTK	1,790	2,400	1,200	60	IMO-T2	88
S12U-MPTK	2,299	3,083	900	60	IMO-T2	89
S12U-MPTK	2,685	3,601	1,200	60	IMO-T2	89
S16U-MPTK	3,065	4,110	900	60	IMO-T2	90
S16U-MPTK	3,580	4,801	1,200	60	IMO-T2	90

Auxiliary generator - IMO Tier I / non emission - High speed

6D16-T

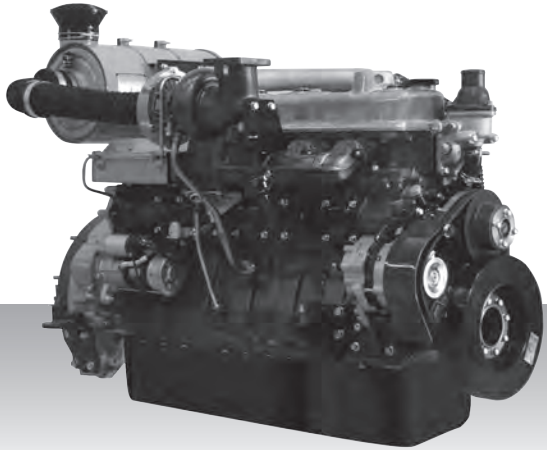

6-cylinder, 4-cycle, water cooled diesel engine,
wih direct-injection, turbocharger and air-cooler.

Bore x stroke (mm) : 118 x 115
Displacement (l) : 7.54

Commercial rating

kW	bhp	rpm	Hz	Fuel cons. l/hr*	Emission
106	142	1,500	50	17.9	not regulated
129	173	1,800	60	on request	not regulated

*Average fuel consumption according to ISO, see page 6.
Specifications / data subject to change without prior notice.

Product dimensions & dry weight

L (mm) : 1,335
W (mm) : 731
H (mm) : 830
Dry weight (kg) : 575

Dimensions and weight are based on standard configuration.

Auxiliary generator - IMO Tier I / non emission - High speed

6D24-T(C)

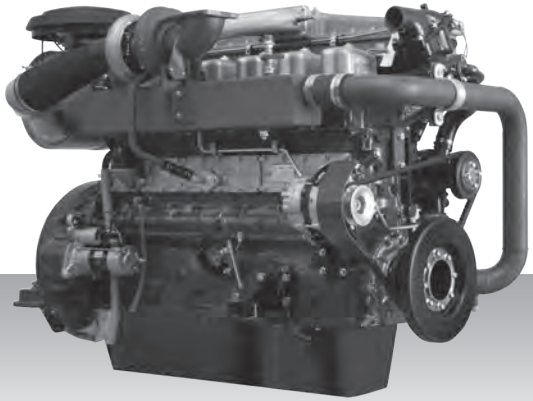

6-cylinder, 4-cycle, water cooled diesel engine,
wih direct-injection, turbocharger and air-cooler.

Bore x stroke (mm) : 130 x 150
Displacement (l) : 11.95

Commercial rating

kW	bhp	rpm	Hz	Fuel cons. l/hr*	Emission
169	227	1,500	50	on request	non emission
181	243	1,500	50	25.5	IMO-T1
195	262	1,800	60	on request	non emission
218	292	1,800	60	30.9	IMO-T1

*Average fuel consumption according to ISO, see page 6.
Specifications / data subject to change without prior notice.

Product dimensions & dry weight

L (mm) : 1,535
W (mm) : 880
H (mm) : 1,235
Dry weight (kg) : 1,209

Dimensions and weight are based on standard configuration.

Auxiliary generator -
IMO Tier I / non emission - High speed

S6B3-MPTA

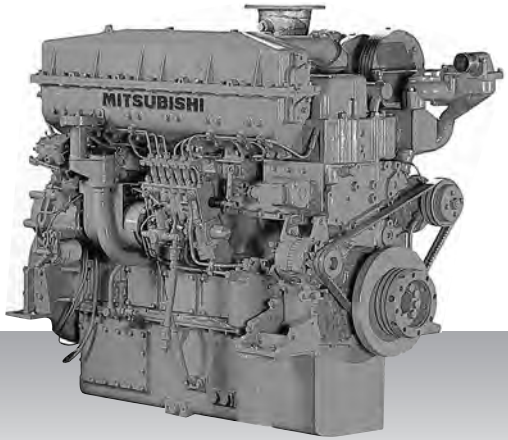

6-cylinder, 4-cycle, water cooled diesel engine,
wih direct-injection, turbocharger and air-cooler.

Bore x stroke (mm) : 135 x 170
Displacement (l) : 14.60

Commercial rating

kW	bhp	rpm	Hz	Fuel cons. l/hr*	Emission
335	449	1,500	50	on request	IMO-T1
375	503	1,800	60	on request	IMO-T1

*Average fuel consumption according to ISO, see page 6.
Specifications / data subject to change without prior notice.

Product dimensions & dry weight

L (mm) : 1,834
W (mm) : 873
H (mm) : 1,331
Dry weight (kg) : 1,300

Dimensions and weight are based on standard configuration.

Auxiliary generator - IMO Tier I / non emission - High speed

S6A3-MPTA

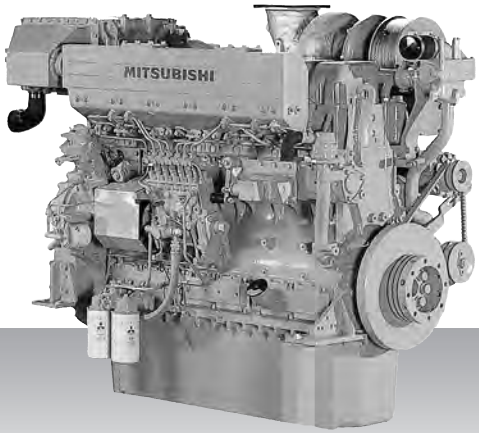

6-cylinder, 4-cycle, water cooled diesel engine,
wih direct-injection, turbocharger and air-cooler.

Bore x stroke (mm) : 150 x 175
Displacement (l) : 18.56

Commercial rating

kW	bhp	rpm	Hz	Fuel cons. l/hr*	Emission
400	536	1,500	50	49.4	IMO-T1
460	617	1,800	60	57.8	IMO-T1

*Average fuel consumption according to ISO, see page 6.
Specifications / data subject to change without prior notice.

Product dimensions & dry weight

L (mm) : 1,636
W (mm) : 924
H (mm) : 1,421
Dry weight (kg) : 1,850

Dimensions and weight are based on standard configuration.

Auxiliary generator -
IMO Tier I / non emission - High speed

S6R-MPTA

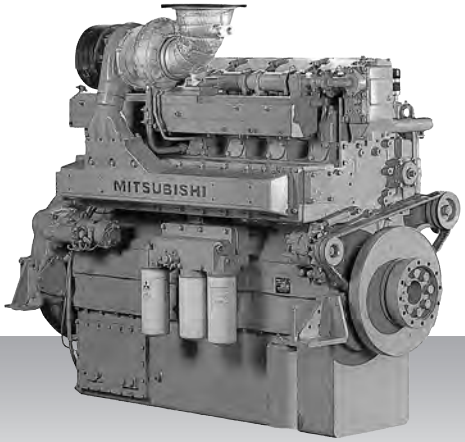

6-cylinder, 4-cycle, water cooled diesel engine,
wih direct-injection, turbocharger and air-cooler.

Bore x stroke (mm) : 170 x 180
Displacement (l) : 24.51

Commercial rating

kW	bhp	rpm	Hz	Fuel cons. l/hr*	Emission
515	691	1,500	50	64.4	IMO-T1
595	798	1,800	60	77.9	IMO-T1

*Average fuel consumption according to ISO, see page 6.
Specifications / data subject to change without prior notice.

Product dimensions & dry weight

L (mm) : 1,811
W (mm) : 1,108
H (mm) : 1,614
Dry weight (kg) : 2,780

Dimensions and weight are based on standard configuration.

Auxiliary generator - IMO Tier I / non emission - High speed

S6R2-MPTA

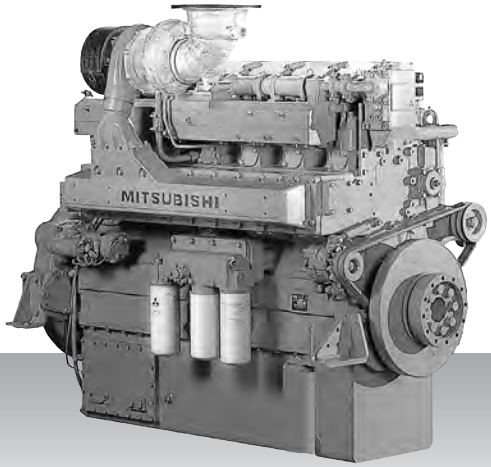

6-cylinder, 4-cycle, water cooled diesel engine,
wih direct-injection, turbocharger and air-cooler.

Bore x stroke (mm) : 170 x 220
Displacement (l) : 29.96

Commercial rating

kW	bhp	rpm	Hz	Fuel cons. l/hr*	Emission
485	650	1,200	60	57.9	IMO-T1
595	798	1,500	50	77.9	IMO-T1

*Average fuel consumption according to ISO, see page 6.
Specifications / data subject to change without prior notice.

Product dimensions & dry weight

L (mm) : 1,811
W (mm) : 1,108
H (mm) : 1,694
Dry weight (kg) : 2,910

Dimensions and weight are based on standard configuration.

Auxiliary generator - IMO Tier I / non emission - High speed

S12A2-MPTA

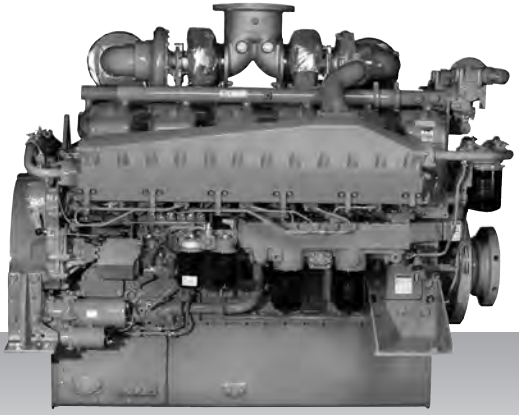

12-cylinder, 4-cycle, water cooled diesel engine,
wih direct-injection, turbocharger and air-cooler.

Bore x stroke (mm) : 150 x 160
Displacement (l) : 33.93

Commercial rating

kW	bhp	rpm	Hz	Fuel cons. l/hr*	Emission
761	1,021	1,800	60	97.5	IMO-T1
679	911	1,500	50	83.0	IMO-T1

*Average fuel consumption according to ISO, see page 6.
Specifications / data subject to change without prior notice.

Product dimensions & dry weight

L (mm) : 2,002
W (mm) : 1,442
H (mm) : 1,596
Dry weight (kg) : 3,380

Dimensions and weight are based on standard configuration.

Auxiliary generator -
IMO Tier I / non emission - High speed

S12R-MPTA

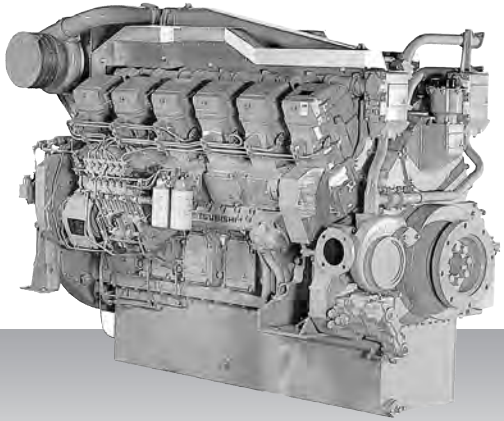

12-cylinder, 4-cycle, water cooled diesel engine,
wih direct-injection, turbocharger and air-cooler.

Bore x stroke (mm) : 170 x 180
Displacement (l) : 49.03

Commercial rating

kW	bhp	rpm	Hz	Fuel cons. l/hr*	Emission
1,110	1,489	1,500	50	136.6	IMO-T1
1,190	1,596	1,800	60	155.2	IMO-T1

*Average fuel consumption according to ISO, see page 6.
Specifications / data subject to change without prior notice.

Product dimensions & dry weight

L (mm) : 2,376
W (mm) : 1,512
H (mm) : 1,742
Dry weight (kg) : 5,230

Dimensions and weight are based on standard configuration.

Auxiliary generator -
IMO Tier I / non emission - High speed

S16R-MPTA

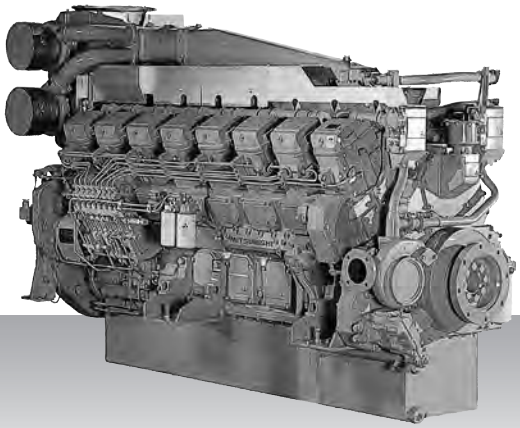

16-cylinder, 4-cycle, water cooled diesel engine,
with direct-injection, turbocharger, air-cooler,.

Bore x stroke (mm) : 170 x 180
Displacement (l) : 65.37

Commercial rating

kW	bhp	rpm	Hz	Fuel cons. l/hr*	Emission
1,480	1,985	1,500	50	177.9	IMO-T1
1,590	2,132	1,800	60	200.9	IMO-T1

*Average fuel consumption according to ISO, see page 6.
Specifications / data subject to change without prior notice.

Product dimensions & dry weight

L (mm) : 2,931
W (mm) : 1,512
H (mm) : 1,960
Dry weight (kg) : 6,660

Dimensions and weight are based on standard configuration.

Auxiliary generator - IMO Tier II / CCNR-2 / EU-3A - High speed

6D16-T

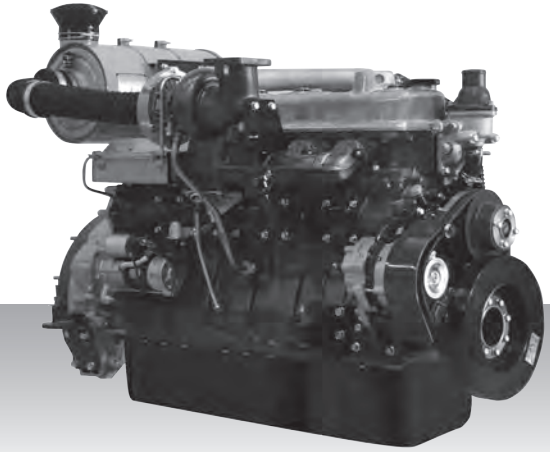

6-cylinder, 4-cycle, water cooled diesel engine,
wih direct-injection, turbocharger and air-cooler.

Bore x stroke (mm) : 118 x 115
Displacement (l) : 7.54

Commercial rating

kW	bhp	rpm	Hz	Fuel cons. l/hr*	Emission
106	142	1,500	50	17.9	not regulated for IMO-T2
129	173	1,800	60	on request	not regulated for IMO-T2

*Average fuel consumption according to ISO, see page 6.
Specifications / data subject to change without prior notice.

Product dimensions & dry weight

L (mm) : 1,335
W (mm) : 731
H (mm) : 830
Dry weight (kg) : 575

Dimensions and weight are based on standard configuration.

Auxiliary generator - IMO Tier II / CCNR-2 / EU-3A - High speed

6D24-TC

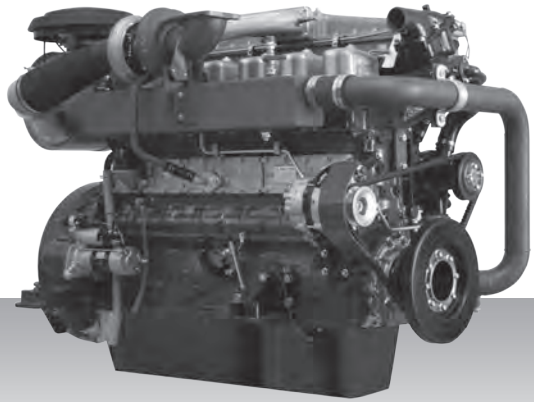

6-cylinder, 4-cycle, water cooled diesel engine,
wih direct-injection, turbocharger and air-cooler.

Bore x stroke (mm) : 130 x 150
Displacement (l) : 11.95

Commercial rating

kW	bhp	rpm	Hz	Fuel cons. l/hr*	Emission
181	243	1,500	50	25.5	IMO-T2
218	292	1,800	60	30.9	IMO-T2

*Average fuel consumption according to ISO, see page 6.
Specifications / data subject to change without prior notice.

Product dimensions & dry weight

L (mm) : 1,535
W (mm) : 880
H (mm) : 1,235
Dry weight (kg) : 575

Dimensions and weight are based on standard configuration.

Auxiliary generator - IMO Tier II / CCNR-2 / EU-3A - High speed

S6B3-T2MPTAW

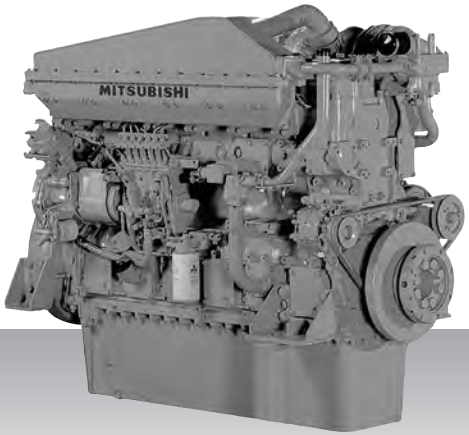

6-cylinder, 4-cycle, water cooled diesel engine,
wih direct-injection, turbocharger and air-cooler.

Bore x stroke (mm) : 135 x 170
Displacement (l) : 14.60

Commercial rating

kW	bhp	rpm	Hz	Fuel cons. l/hr*	Emission
335	449	1,500	50	45.7	IMO-T2
375	503	1,800	60	52.5	IMO-T2

*Average fuel consumption according to ISO, see page 6.
Specifications / data subject to change without prior notice.

Product dimensions & dry weight

L (mm) : 1,465
W (mm) : 873
H (mm) : 1,331
Dry weight (kg) : 1,300

Dimensions and weight are based on standard configuration.

Auxiliary generator -
IMO Tier II / CCNR-2 / EU-3A - High speed

S6R-(Z3)MPTAW

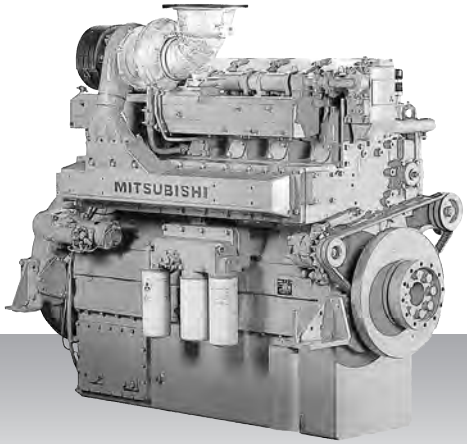

6-cylinder, 4-cycle, water cooled diesel engine,
wih direct-injection, turbocharger and air-cooler.

Bore x stroke (mm) : 170 x 180
Displacement (l) : 24.51

Commercial rating

kW	bhp	rpm	Hz	Fuel cons. l/hr*	Emission
545	731	1,500	50	on request	IMO-T2
635	852	1,800	60	82.4	IMO-T2 / EU-3A

*Average fuel consumption according to ISO, see page 6.
Specifications / data subject to change without prior notice.

Product dimensions & dry weight

L (mm) : 1,786
W (mm) : 1,220
H (mm) : 1,650
Dry weight (kg) : 2,913

Dimensions and weight are based on standard configuration.

Auxiliary generator - IMO Tier II / CCNR-2 / EU-3A - High speed

S6R2-T2MPTK

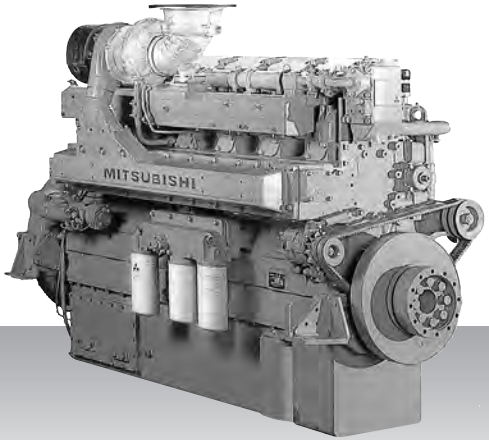

6-cylinder, 4-cycle, water cooled diesel engine,
wih direct-injection, turbocharger and air-cooler.

Bore x stroke (mm) : 170 x 220
Displacement (l) : 29.96

Commercial rating

kW	bhp	rpm	Hz	Fuel cons. l/hr*	Emission
500	671	1,200	60	on request	IMO-T2
640	858	1,500	50	on request	IMO-T2

*Average fuel consumption according to ISO, see page 6.
Specifications / data subject to change without prior notice.

Product dimensions & dry weight

L (mm) : 1,811
W (mm) : 1,108
H (mm) : 1,694
Dry weight (kg) : 2,960

Dimensions and weight are based on standard configuration.

Auxiliary generator -
IMO Tier II / CCNR-2 / EU-3A - High speed

S12A2-MPTAW

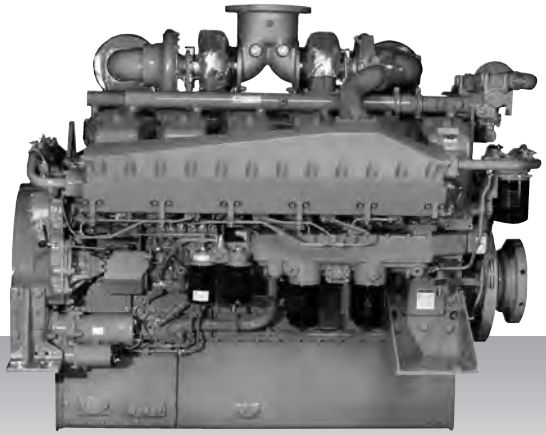

12-cylinder, 4-cycle, water cooled diesel engine,
wih direct-injection, turbocharger and air-cooler.

Bore x stroke (mm) : 150 x 160
Displacement (l) : 33.93

Commercial rating

kW	bhp	rpm	Hz	Fuel cons. l/hr*	Emission
709	951	1,500	50	on request	IMO-T2
828	1,110	1,800	60	102.0	IMO-T2

*Average fuel consumption according to ISO, see page 6.
Specifications / data subject to change without prior notice.

Product dimensions & dry weight

L (mm) : 2,059
W (mm) : 1,654
H (mm) : 1,596
Dry weight (kg) : 3,840

Dimensions and weight are based on standard configuration.

Auxiliary generator - IMO Tier II / CCNR-2 / EU-3A - High speed

S12R-MPTAW

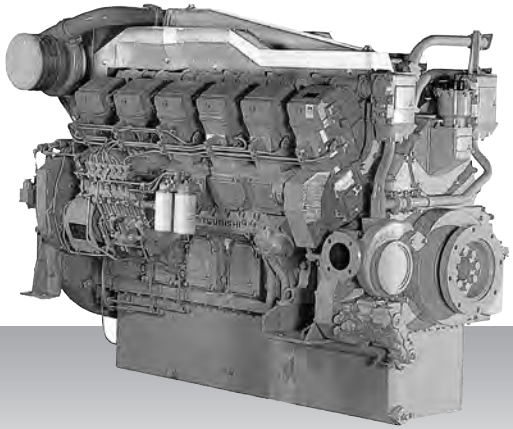

12-cylinder, 4-cycle, water cooled diesel engine, wih direct-injection, turbocharger and air-cooler.

Bore x stroke (mm) : 170 x 180
Displacement (l) : 49.03

Commercial rating

kW	bhp	rpm	Hz	Fuel cons. l/hr*	Emission
840	1,126	1,200	60	95.6	IMO-T2
1,120	1,502	1,500	50	124.0	IMO-T2
1,270	1,703	1,800	60	163.6	IMO-T2

*Average fuel consumption according to ISO, see page 6.
Specifications / data subject to change without prior notice.

Product dimensions & dry weight

L (mm) : 2,416
W (mm) : 1,585
H (mm) : 1,807
Dry weight (kg) : 5,470

Dimensions and weight are based on standard configuration.

Auxiliary generator -
IMO Tier II / CCNR-2 / EU-3A - High speed

S16R-MPTAW

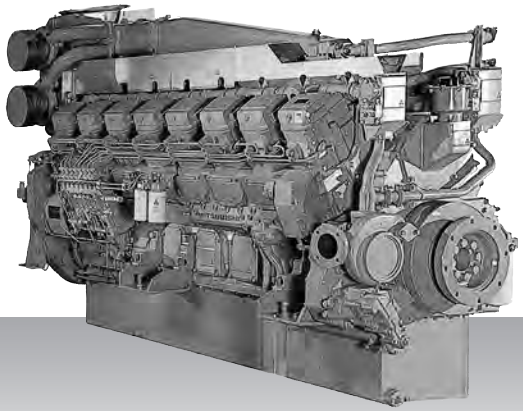

16-cylinder, 4-cycle, water cooled diesel engine,
wih direct-injection, turbocharger and air-cooler.

Bore x stroke (mm) : 170 x 180
Displacement (l) : 65.37

Commercial rating

kW	bhp	rpm	Hz	Fuel cons. l/hr*	Emission
1,120	1,502	1,200	60	on request	IMO-T2
1,500	2,012	1,500	50	182.6	IMO-T2
1,690	2,266	1,800	60	211.9	IMO-T2

*Average fuel consumption according to ISO, see page 6.
Specifications / data subject to change without prior notice.

Product dimensions & dry weight

L (mm) : 2,971
W (mm) : 1,585
H (mm) : 1,960
Dry weight (kg) : 6,950

Dimensions and weight are based on standard configuration.

Auxiliary generator - IMO Tier II /CCNR-2 / EU-3A - High speed

S16R2-T2MPTAW

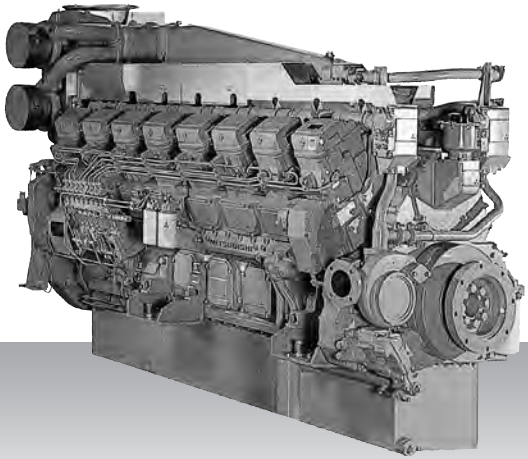

16-cylinder, 4-cycle, water cooled diesel engine, wih direct-injection, turbocharger and air-cooler.

Bore x stroke (mm) : 170 x 220
Displacement (l) : 79.90

Commercial rating

kW	bhp	rpm	Hz	Fuel cons. l/hr*	Emission
1,568	2,103	1,200	60	on request	IMO-T2
1,960	2,628	1,500	50	on request	IMO-T2

*Average fuel consumption according to ISO, see page 6.
Specifications / data subject to change without prior notice.

Product dimensions & dry weight

L (mm) : 2,946
W (mm) : 1,525
H (mm) : 2,030
Dry weight (kg) : 7,750

Dimensions and weight are based on standard configuration.

Auxiliary generator -
IMO Tier II - Medium speed

S6U-MPTK

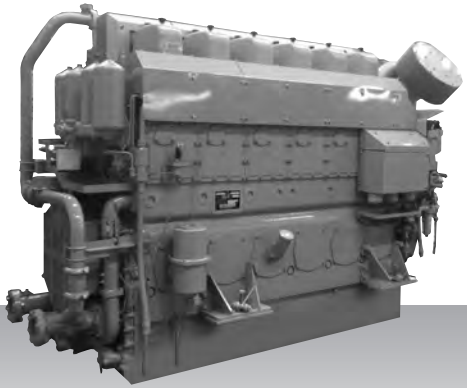

6-cylinder, 4-cycle, water cooled diesel engine,
with direct-injection, turbocharger, air-cooler,.

Bore x stroke (mm) : 240 x 260
Displacement (l) : 70.57

Commercial rating

kW	bhp	rpm	Hz	Fuel cons. g/kWh*	Emission
1,150	1,542	900	60	on request	IMO-T2
1,270	1,703	1,000	50	on request	IMO-T2
1,343	1,801	1,200	60	on request	IMO-T2

*Fuel consumption value at 100% rated power in g/kWh.
Specifications / data subject to change without prior notice.

Product dimensions & dry weight

L (mm) : 3,211
W (mm) : 1,429
H (mm) : 2,104
Dry weight (kg) : 8,400

Dimensions and weight are based on standard configuration.

Auxiliary generator -
IMO Tier II - Medium speed

S6U2-MPTK

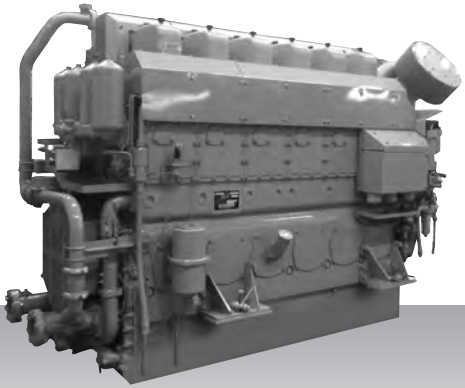

6-cylinder, 4-cycle, water cooled diesel engine,
wih direct-injection, turbocharger and air-cooler.

Bore x stroke (mm) : 240 x 300
Displacement (l) : 81.43

Commercial rating

kW	bhp	rpm	Hz	Fuel cons. g/kWh*	Emission
1,250	1,676	900	60	on request	IMO-T2
1,363	1,828	1,000	50	on request	IMO-T2

*Fuel consumption value at 100% rated power in g/kWh.
Specifications / data subject to change without prior notice.

Product dimensions & dry weight

L (mm) : 3,226
W (mm) : 1,429
H (mm) : 2,177
Dry weight (kg) : 8,600

Dimensions and weight are based on standard configuration.

Auxiliary generator -
IMO Tier II - Medium speed

S8U-MPTK

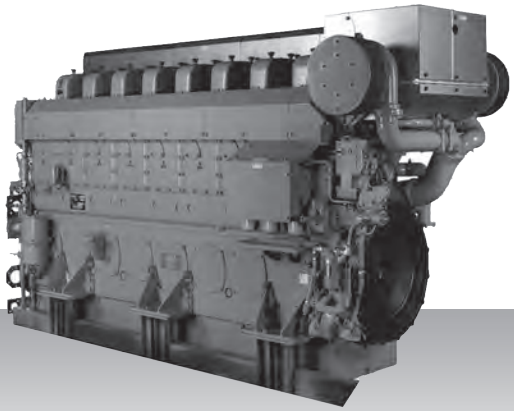

8-cylinder, 4-cycle, water cooled diesel engine,
with direct-injection, turbocharger and air-cooler.

Bore x stroke (mm) : 240 x 260
Displacement (l) : 94.10

Commercial rating

kW	bhp	rpm	Hz	Fuel cons. g/kWh*	Emission
1,533	2,056	900	60	on request	IMO-T2
1,693	2,270	1,000	50	on request	IMO-T2
1,790	2,400	1,200	60	on request	IMO-T2

*Fuel consumption value at 100% rated power in g/kWh.
Specifications / data subject to change without prior notice.

Product dimensions & dry weight

L (mm) : 4,065
W (mm) : 1,539
H (mm) : 2,192
Dry weight (kg) : 11,000

Dimensions and weight are based on standard configuration.

Auxiliary generator -
IMO Tier II - Medium speed

S12U-MPTK

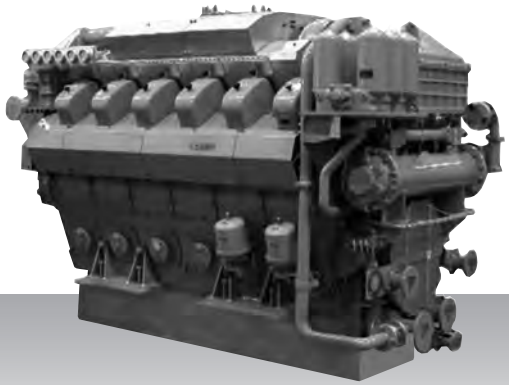

12-cylinder, 4-cycle, water cooled diesel engine,
wih direct-injection, turbocharger and air-cooler.

Bore x stroke (mm) : 240 x 260
Displacement (l) : 141.15

Commercial rating

kW	bhp	rpm	Hz	Fuel cons. g/kWh*	Emission
2,299	3,083	900	60	on request	IMO-T2
2,541	3,408	1,000	50	on request	IMO-T2
2,685	3,601	1,200	60	on request	IMO-T2

*Fuel consumption value at 100% rated power in g/kWh.
Specifications / data subject to change without prior notice.

Product dimensions & dry weight

L (mm) : 3,562
W (mm) : 1,910
H (mm) : 2,374
Dry weight (kg) : 16,600

Dimensions and weight are based on standard configuration.

Auxiliary generator -
IMO Tier II - Medium speed

S16U-MPTK

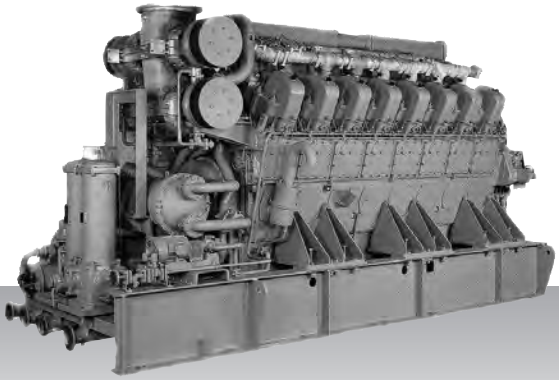

16-cylinder, 4-cycle, water cooled diesel engine,
wih direct-injection, turbocharger and air-cooler.

Bore x stroke (mm) : 240 x 260
Displacement (l) : 188.19

Commercial rating

kW	bhp	rpm	Hz	Fuel cons. g/kWh*	Emission
3,065	4,110	900	60	on request	IMO-T2
3,388	4,543	1,000	50	on request	IMO-T2
3,580	4,801	1,200	60	on request	IMO-T2

*Fuel consumption value at 100% rated power in g/kWh.
Specifications / data subject to change without prior notice.

Product dimensions & dry weight

L (mm) : 4,628
W (mm) : 1,710
H (mm) : 2,473
Dry weight (kg) : 20,500

Dimensions and weight are based on standard configuration.

Generator set specifications

LNG Tanker - M/T Ternsund
Partner - Power House AB

ENGINE MODEL LINE-UP - MARINE GENERATOR SET

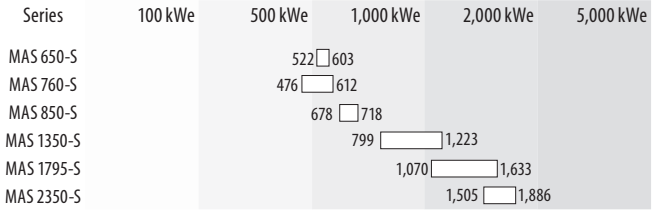

Generator set products - IMO Tier II / EU-3A

Engine model	kVA	kWe	rpm	Hz	Emission	Page
Diesel-electric propulsion						
50 Hz						
MAS 650-S	652	522	1,500	50	IMO-T2	93
MAS 760-S	765	612	1,500	50	IMO-T2	94
MAS 850-S	847	678	1,500	50	IMO-T2	95
MAS 1350-S	1,351	1,081	1,500	50	IMO-T2	96
MAS 1795-S	1,796	1,437	1,500	50	IMO-T2	97
MAS 2350-S	2,358	1,886	1,500	50	IMO-T2	98
60 Hz						
MAS 650-S	684	548	1,800	60	IMO-T2	93
MAS 760-S	594	476	1,200	60	IMO-T2	94
MAS 850-S	898	718	1,800	60	IMO-T2	95
MAS 1350-S	999	799	1,200	60	IMO-T2	96
MAS 1350-S	1,385	1,108	1,800	60	IMO-T2	96
MAS 1795-S	1,337	1,070	1,200	60	IMO-T2	97
MAS 1795-S	1,857	1,485	1,800	60	IMO-T2	97
MAS 2350-S	1,881	1,505	1,200	60	IMO-T2	98
Auxiliary generator						
50 Hz						
MAS 650-S	652	522	1,500	50	IMO-T2	93
MAS 760-S	765	612	1,500	50	IMO-T2	94
MAS 850-S	847	678	1,500	50	IMO-T2	95
MAS 1350-S	1,351	1,081	1,500	50	IMO-T2	96
MAS 1795-S	1,796	1,437	1,500	50	IMO-T2	97
MAS 2350-S	2,358	1,886	1,500	50	IMO-T2	98
60 Hz						
MAS 650-S	753	603	1,800	60	IMO-T2 / EU-3A	93
MAS 760-S	594	476	1,200	60	IMO-T2	94
MAS 850-S	988	790	1,800	60	IMO-T2	95
MAS 1350-S	999	799	1,200	60	IMO-T2	96
MAS 1350-S	1,529	1,223	1,800	60	IMO-T2	96
MAS 1795-S	1,337	1,070	1,200	60	IMO-T2	97
MAS 1795-S	2,041	1,633	1,800	60	IMO-T2	97
MAS 2350-S	1,881	1,505	1,200	60	IMO-T2	98

Generator set -
IMO Tier II / EU-3A

MAS 650-S

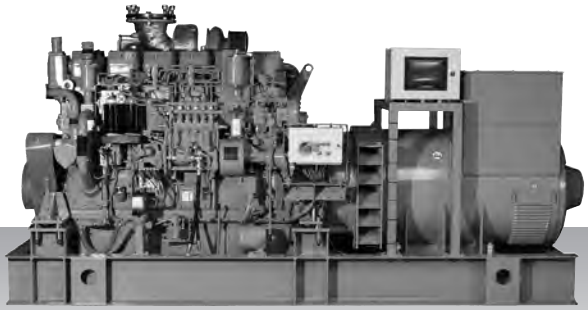

Engine model S6R-(Z3)MPTAW

Commercial rating

	kVA	kWe	rpm	Hz	Emission
Diesel-electric propulsion	652	522	1,500	50	IMO-T2
	684	548	1,800	60	IMO-T2
Auxiliary generator	652	522	1,500	50	IMO-T2
	753	603	1,800	60	IMO-T2 / EU-3A

Specifications/ data subject to change without prior notice.

Product dimensions & dry weight

L (mm) : 3,600
W (mm) : 1,615
H (mm) : 1,900
Dry weight (kg) : 5,900

Dimensions and weight are based on standard configuration.

Generator set -
IMO Tier II / EU-3A

MAS 760-S

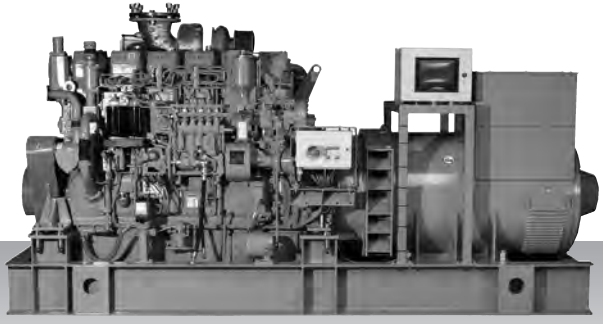

Engine model S6R2-T2MPTK

Commercial rating

	kVA	kWe	rpm	Hz	Emission
Diesel-electric propulsion	594	476	1,200	60	IMO-T2
	765	612	1,500	50	IMO-T2
Auxiliary generator	594	476	1,200	60	IMO-T2
	765	612	1,500	50	IMO-T2

Specifications/ data subject to change without prior notice.

Product dimensions & dry weight

L (mm) : 3,600
W (mm) : 1,615
H (mm) : 1,931
Dry weight (kg) : 6,030

Dimensions and weight are based on standard configuration.

Generator set -
IMO Tier II / EU-3A

MAS 850-S

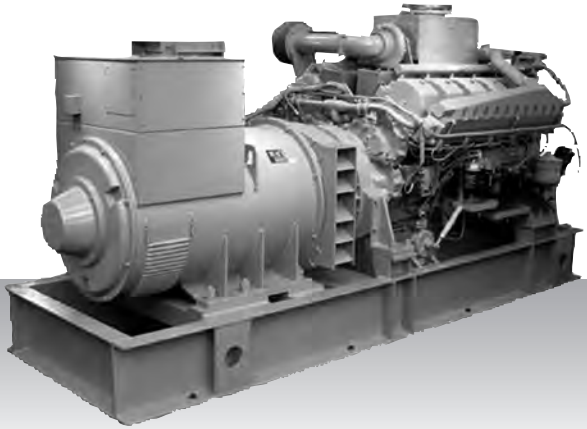

Engine model S12A2-MPTAW

Commercial rating

	kVA	kWe	rpm	Hz	Emission
Diesel-electric propulsion	847	678	1,500	50	IMO-T2
	898	718	1,800	60	IMO-T2
Auxiliary generator	847	678	1,500	50	IMO-T2
	988	790	1,800	60	IMO-T2

Specifications/ data subject to change without prior notice.

Product dimensions & dry weight

L (mm) : 3,760
W (mm) : 1,818
H (mm) : 1,900
Dry weight (kg) : 8,000

Dimensions and weight are based on standard configuration.

Generator set -
IMO Tier II / EU-3A

MAS 1350-S

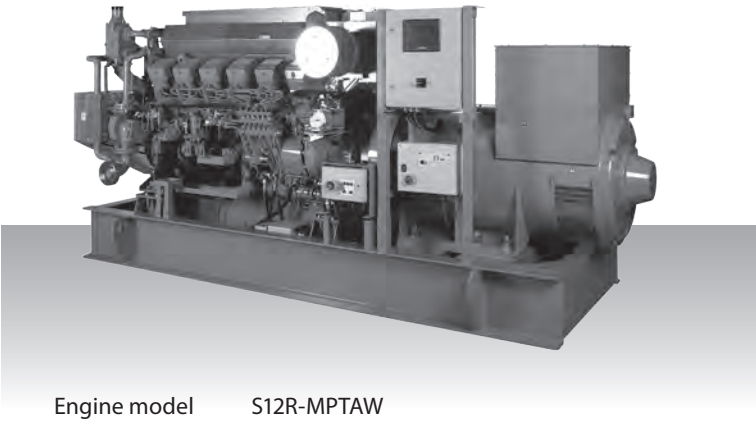

Engine model S12R-MPTAW

Commercial rating

	kVA	kWe	rpm	Hz	Emission
Diesel-electric propulsion	999	799	1,200	60	IMO-T2
	1,351	1,081	1,500	50	IMO-T2
	1,385	1,108	1,800	60	IMO-T2
Auxiliary generator	999	799	1,200	60	IMO-T2
	1,351	1,081	1,500	50	IMO-T2
	1,529	1,223	1,800	60	IMO-T2

Specifications/ data subject to change without prior notice.

Product dimensions & dry weight

L (mm) : 4,100
W (mm) : 1,725
H (mm) : 2,280
Dry weight (kg) : 10,000

Dimensions and weight are based on standard configuration.

Generator set -
IMO Tier II / EU-3A

MAS 1795-S

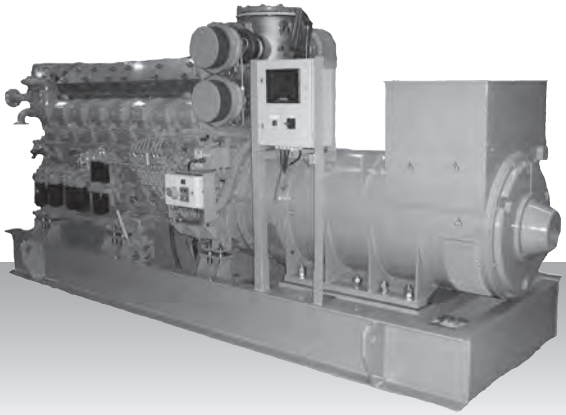

Engine model S16R-MPTAW

Commercial rating

	kVA	kWe	rpm	Hz	Emission
Diesel-electric propulsion	1,337	1,070	1,200	60	IMO-T2
	1,796	1,437	1,500	50	IMO-T2
	1,857	1,485	1,800	60	IMO-T2
Auxiliary generator	1,337	1,070	1,200	60	IMO-T2
	1,796	1,437	1,500	50	IMO-T2
	2,041	1,633	1,800	60	IMO-T2

Specifications/ data subject to change without prior notice.

Product dimensions & dry weight

L (mm) : 4,880
W (mm) : 1,725
H (mm) : 2,280
Dry weight (kg) : 14,000

Dimensions and weight are based on standard configuration.

Generator set -
IMO Tier II / EU-3A

MAS 2350-S

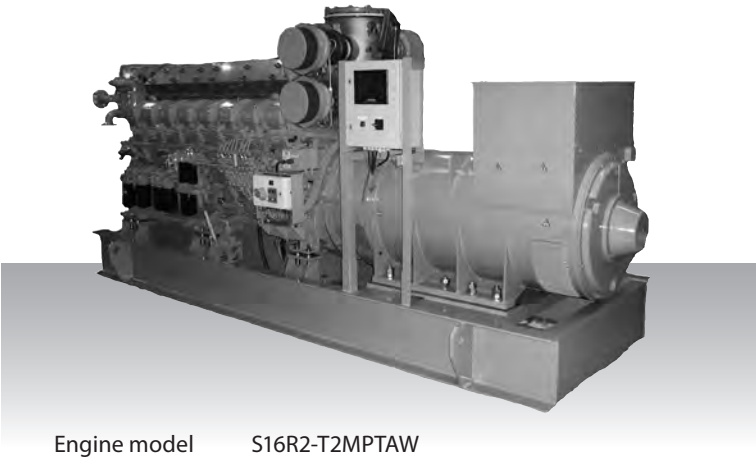

Engine model S16R2-T2MPTAW

Commercial rating

	kVA	kWe	rpm	Hz	Emission
Diesel-electric propulsion	1,881	1,505	1,200	60	IMO-T2
	2,358	1,886	1,500	50	IMO-T2
Auxiliary generator	1,881	1,505	1,200	60	IMO-T2
	2,358	1,886	1,500	50	IMO-T2

Specifications/ data subject to change without prior notice.

Product dimensions & dry weight

L (mm) : 4,950
W (mm) : 1,750
H (mm) : 2,400
Dry weight (kg) : 18,000

Dimensions and weight are based on standard configuration.

Gas generator set specifications

Ferry Boat - Dronninge
Partner - Mitsubishi Turbocharger and Engine Europe B.V.
Norwegian Branch Office, Marine and Power Solutions

ENGINE MODEL LINE-UP - MARINE GAS GENERATOR SET

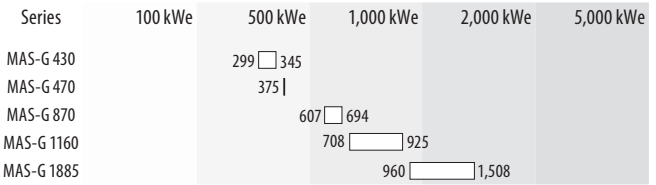

Gas generator set products*

Engine model	kVA	KWe	rpm	Hz	Page
50 Hz					
MAS-G 430	431	345	1,500	50	101
MAS-G 870	868	694	1,500	50	103
MAS-G 1160	1,157	925	1,500	50	104
MAS-G 1885	1,885	1,508	1,500	50	105
60 Hz					
MAS-G 430	374	299	1,200	60	101
MAS-G 470	468	375	1,200	60	102
MAS-G 870	750	607	1,200	60	103
MAS-G 1160	975	780	1,200	60	104
MAS-G 1885	1,200	960	1,200	60	105

* For gas direct propulsion fixed pitch propellor and controlable pitch propellor please contact Mitsubishi Turbocharger and Engine Europe B.V.

Gas generator set

MAS-G 430

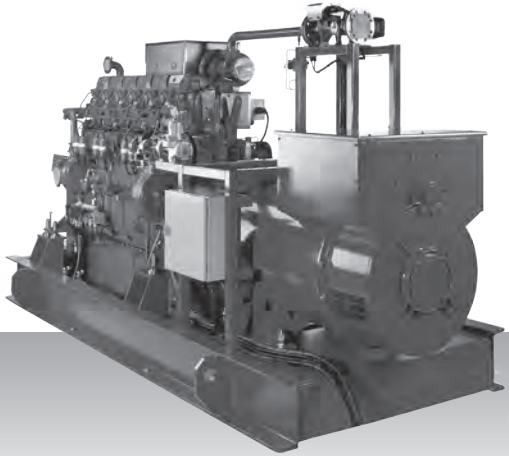

Engine model GS6R-MPTK

Commercial rating

	kVA	kWe	rpm	Hz
Gas-electric propulsion	374	299	1,200	60
	431	345	1,500	50

Specifications / data subject to change without prior notice.

Product dimensions & dry weight

L (mm) : 1,797
W (mm) : 1,088
H (mm) : 1,638
Dry weight (kg) : 2,400

Dimensions and weight are based on standard configuration.

Gas generator set

MAS-G 470

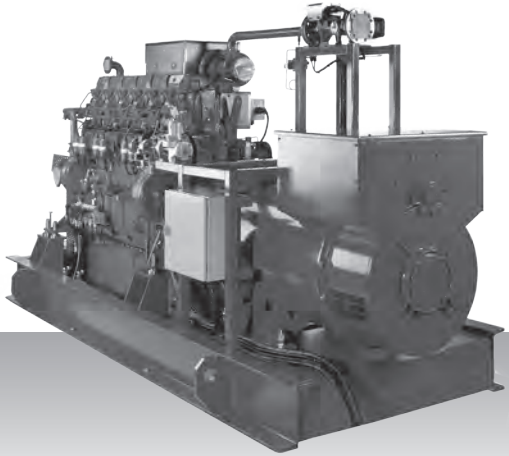

Engine model GS6R2-MPTK

Commercial rating

	kVA	kWe	rpm	Hz
Gas-electric propulsion	468	375	1,200	60

Specifications / data subject to change without prior notice.

Product dimensions & dry weight

L (mm) : 1,864
W (mm) : 1,063
H (mm) : 1,718
Dry weight (kg) : 2,650

Dimensions and weight are based on standard configuration.

Gas generator set

MAS-G 870

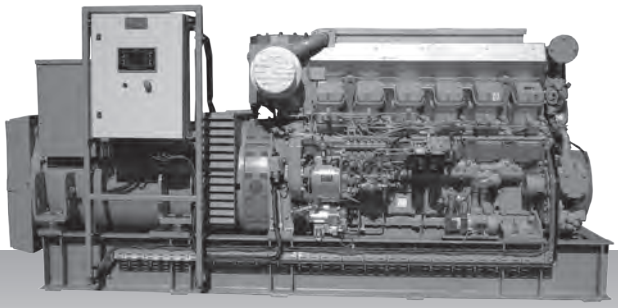

Engine model GS12R-MPTK

Commercial rating

	kVA	kWe	rpm	Hz
Gas-electric propulsion	750	607	1,200	60
	868	694	1,500	50

Specifications / data subject to change without prior notice.

Product dimensions & dry weight

L (mm) : 2,371
W (mm) : 1,820
H (mm) : 2,137
Dry weight (kg) : 5,375

Dimensions and weight are based on standard configuration.

Gas generator set

MAS-G 1160

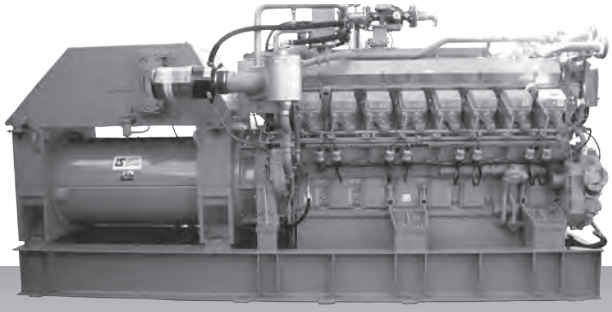

Engine model GS16R-MPTK

Commercial rating

	kVA	kWe	rpm	Hz
Gas-electric propulsion	975	780	1,200	60
	1,157	925	1,500	50

Specifications / data subject to change without prior notice.

Product dimensions & dry weight

L (mm) : 2,841
W (mm) : 1,820
H (mm) : 2,137
Dry weight (kg) : 6,800

Dimensions and weight are based on standard configuration.

Gas generator set

MAS-G 1885

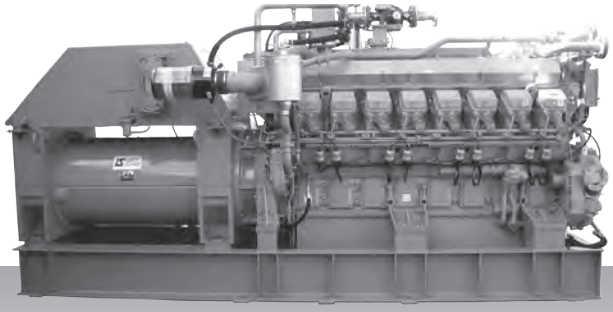

Engine model GS16R2-MPTK

Commercial rating

	kVA	kWe	rpm	Hz
Gas-electric propulsion	1,200	960	1,200	60
	1,885	1,508	1,500	50

Specifications / data subject to change without prior notice.

Product dimensions & dry weight

L (mm) : 3,423
W (mm) : 2,164
H (mm) : 2,122
Dry weight (kg) : 8,105

Dimensions and weight are based on standard configuration.

International offices

WORLDWIDE

Headquarters

Mitsubishi Heavy Industries, Ltd.

16-5 Konan 2-chome, Minato-ku, Tokyo, Japan
Tel: +81-3-6716-3111
Fax: +81-3-6716-5800
www.mhi.co.jp/en

Headquarters engine division

Mitsubishi Heavy Industries Engine & Turbocharger, Ltd.

3000, Tana, Chuo-ku, Sagamihara, Kanagawa, 252-5293, Japan
Tel: +81-42-862-0701
Fax: +81-42-763-0800
www.mhiet.co.jp/en/

Asia-Pacific

Singapore

MHI Engine System Asia Pte. Ltd.

No. 3 Tuas Avenue 12, Singapore 639024, Republic of Singapore
Tel: +65-6862-2202
Fax: +65-6862-5728
www.mhiesa.com.sg

Indonesia

PT. MHI Engine System Indonesia

#302 Bld. Cilandak Commercial Estate P.O. Box 7510 CCE, Cilandak, Jakarta, Indonesia
Tel: +62-21-7890191
Fax: +62-21-7890278

Philippines

MHI Engine System Philippines, Inc.

24 Warehouse 4C Sunblest Compound KM 23, West service road BO. Cupang, Muntinlupa, Metro Manila, Philippines
Tel: +63-2-775-0209
Fax: +63-2-775-0310

Vietnam

MHI Engine System Vietnam Co., Ltd.

39 Dai Lo Huu Nghi, Vietnam Singapore Industrial Park Thuan An District, Binh Duong Province Socialist Republic of Vietnam
Tel: +63-2-775-0209
Fax: +63-2-775-0310

Americas

U.S.A.

Mitsubishi Turbocharger and Engine America, Inc.

Two Pierce Place, 11th Floor, Itasca, IL 60143 U.S.A.
Tel: +1-630-268-0750
Fax: +1-630-268-9293
www.mitsubishi-engine.com

Brazil

MHI Sul Americana Distribuidora de Motores Ltda.

Avenida Doutor Altino Arantes, 331 Vila Clementino Cep 04042-032,
Sao Paulo, SP, Brazil
Tel: +55-11-3515-7890
Fax: +55-11-3515-7899
www.msamotores.com.br

Europe, Russia, Middle East and Africa

Headquarters

Mitsubishi Turbocharger and Engine Europe B.V.

Damsluisweg 2, 1332 EC, Almere, The Netherlands
Tel: +31-36-538-8311
Email: info@mtee.eu
www.mtee.eu

Branch office

Mitsubishi Turbocharger and Engine Europe B.V.
Norwegian Branch Office, Marine and Power Solutions

Industriveien 1, 3430 Spikkestad, Norway
Tel: +47-31-291-940
Email: info@mtee.no
www.mtee.no

DISTRIBUTORS AND DEALERS OF MARINE ENGINES

Albania, Bosnia and Herzegovina, Croatia, Kosovo, Macedonia, Montenegro, Serbia, Slovenia
EXTREME d.o.o.
www.extreme-slo.com

Belarus
Motors & Transmission
www.mit.by

Denmark, Greenland
West Diesel A.S.
www.westdiesel.dk

Estonia, Latvia, Lithuania
BMG Diesel Center
www.dieselcenter.ee

Finland
Inter Marine Oy
www.intermarine.fi

France
MIDIF
www.midif.fr

Germany, Austria, Switzerland
ScanDiesel GmbH
www.scandiesel.de

Greece
A.EI.M.A. SA
www.aeima.gr

Iceland
MD Vélar Ltd.
www.mdvelar.is

Ireland
Diamond Diesels UK Ltd.
www.diamonddiesels.co.uk

Padmos Ireland
www.padmos.nl

Italy
Cerdiesel S.p.A.
www.cerdiesel.com

Compagnia Tecnica Motori S.p.A.
www.ctm.it

Morocco
Ste Naval Maintenance
ste.naval@hotmail.fr

Netherlands, Belgium, Luxemburg
Koedood Dieselservice B.V.
www.koedood.nl

Machinefabriek G. Olthof N.V.
www.olthof.eu

Machinefabriek Padmos Stellendam B.V.
www.padmos.nl

Norway
Mitsubishi Turbocharger and Engine Europe B.V., Norwegian Branch Office, Marine and Power Solutions
www.mtee.no

Oman
OHI Marine
www.ohigroup.com

Poland
BTH FAST
www.bthfast.eu

Portugal
Progener
www.progener.es

Romania
SC Watermota Srl
www.watermota.ro

Russia
"M-MOTORS" LLC
www.mitsubishi-engine.ru

South Africa, Swaziland, Lesotho
Power O2
www.powero2.co.za

Spain
ITXASTEK SAL
unai@itxastek.com

Progener
www.progener.es

Solé Diesel S.A.
www.solediesel.com

Sweden
Power House AB
www.powerhouse.se

Turkey
Enka Marketing Export Import Inc.
www.enka.com.tr

United Kingdom
Diamond Diesels UK Ltd
www.diamonddiesels.co.uk

PARTNERS IN MARINE ENGINES AND GENERATOR SETS

10 to 100 kW
Solé Diesel S.A.
www.solediesel.com

VETUS B.V.
www.vetus.com

Craftsman
www.craftsmanmarine.com

For more information about Mitsubishi marine engines and generator sets specifications please contact your local distributor or Mitsubishi Turbocharger and Engine Europe B.V.

Disclaimer

Mitsubishi Turbocharger and Engine Europe B.V. reserves the right to modify any characteristic or specification without prior notice and without incurring any obligation. The illustrations may include optional equipment and/or accessories. All information in this brochure is based on the latest information available at the time of printing. Unless mentioned otherwise, the information mentioned is owned by Mitsubishi Turbocharger and Engine Europe B.V. Text, lay-out, illustrations, scripts, articles and other items in this product guide are protected by copyright.

Your loyal, reliable partner since 1917

In 1917, Mitsubishi Heavy Industries (MHI) became the first Japanese company to develop and build a diesel engine, and since then has steadfastly pioneered technologies for the reciprocating engine. MHI offers a broad line-up, ranging from construction machinery and marine engines to engines for power generation. In recent years, the company has been involved in the general development of advanced gas turbines, rocket engines, and other types of internal combustion engines, even as it continues to look at the true significance and its decades-long quest to further refine the reciprocating engine.

MANAGEMENT SYSTEM CERTIFICATION
DNV·GL
ISO 9001 ISO 14001

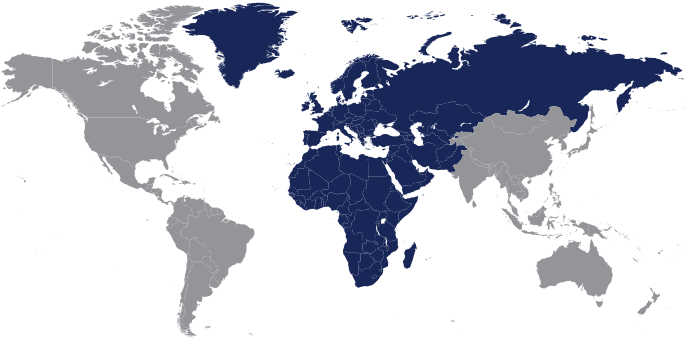

MITSUBISHI TURBOCHARGER AND ENGINE EUROPE B.V.

Headquarters Engine, Generator set & Powerplant Division Europe, Middle East and Africa

Damsluisweg 2
1332 EC Almere
P.O. Box 30101
1303 AC Almere
The Netherlands

Phone +31-36-538-8311

info@mtee.eu
www.mtee.eu