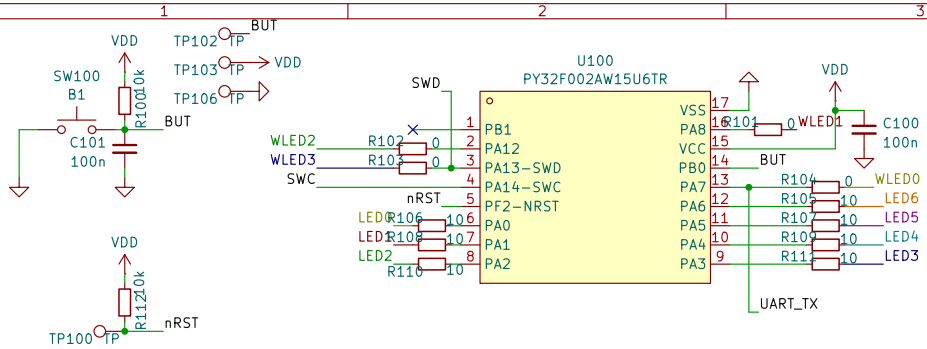

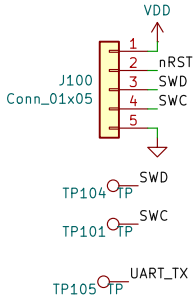

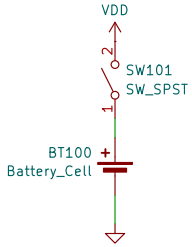

r1:
* initial release
rev 1.1:
* add pads for fixture programming and debugging
* add pullup for reset (accidentally ommited before)
* update red led resistor values
* aestethics cleanup
Notes:
* LED designators have been resetted accidentally, but in next revisions they will be replaced with RGB most likely.)

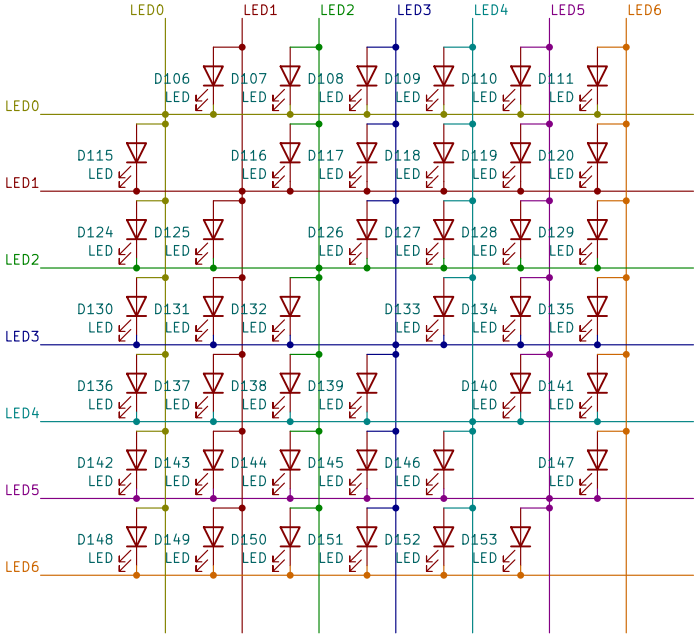

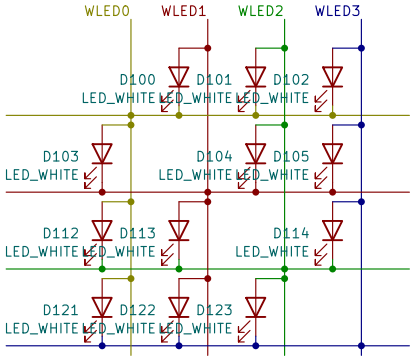

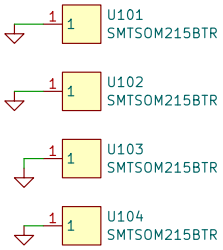

Sheet: /
File: blobbadge.kicad_sch

Title:

Size: A4	Date:	Rev:
KiCad E.D.A. 8.0.6		Id: 1/1