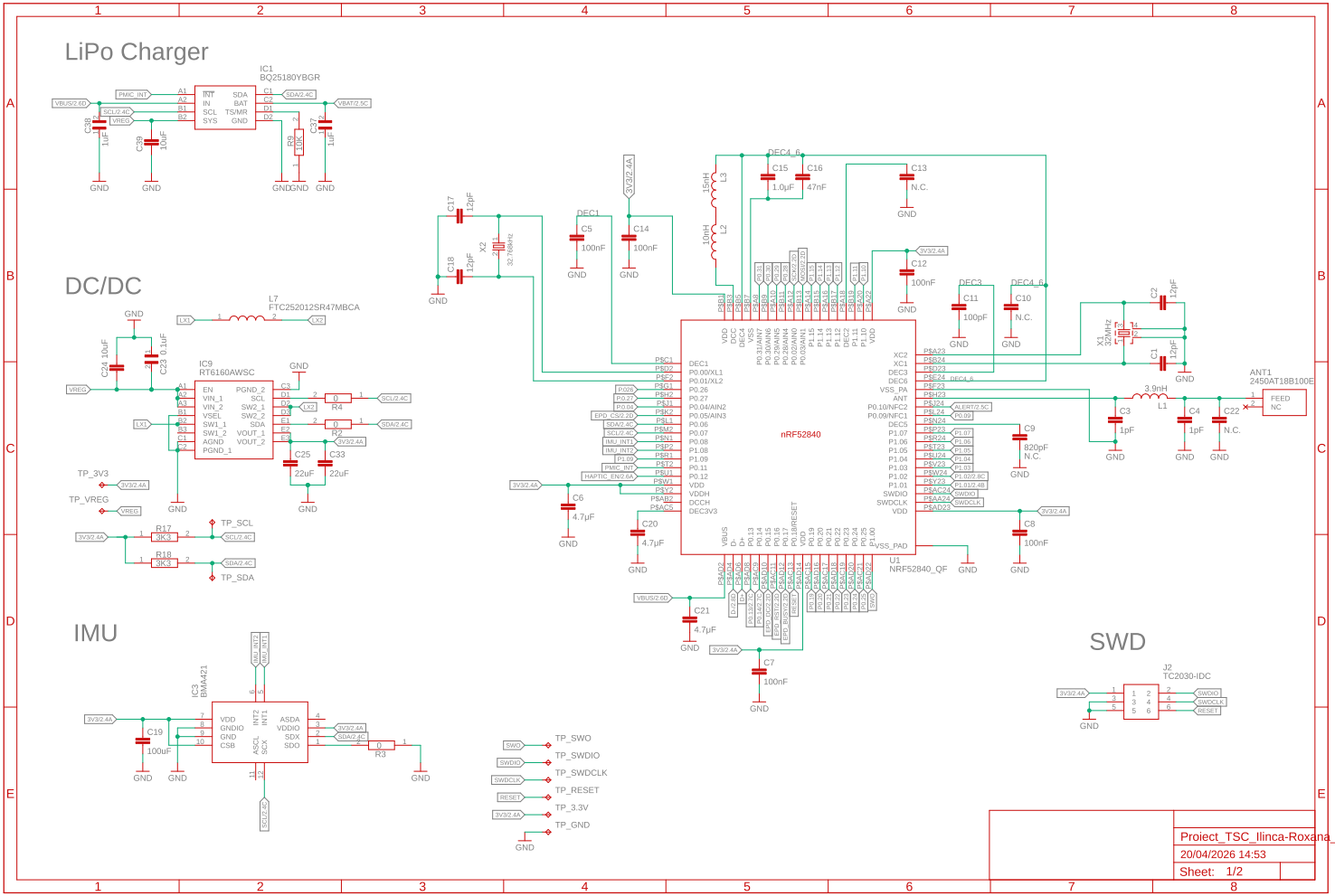
LiPo Charger
IC1
BQ25180YBGR
DC/DC
L7
FTC252012SR47MBCA
IC9
RT6160AWSC
IMU
IC3
BMA421
nRF52840
U1
NRF52840_QF
SWD
J2
TC2030-IDC
ANT1
2450AT18B100E
FEED
NC
X1
32MHz
X2
32.768kHz
TP_SWO
TP_SWDIO
TP_SWDCLK
TP_RESET
TP_3.3V
TP_GND
TP_SCL
TP_SDA
TP_3V3
TP_VREG
Proiect_TSC_Ilinca-Roxana_Tololoi
20/04/2026 14:53
Sheet: 1/2

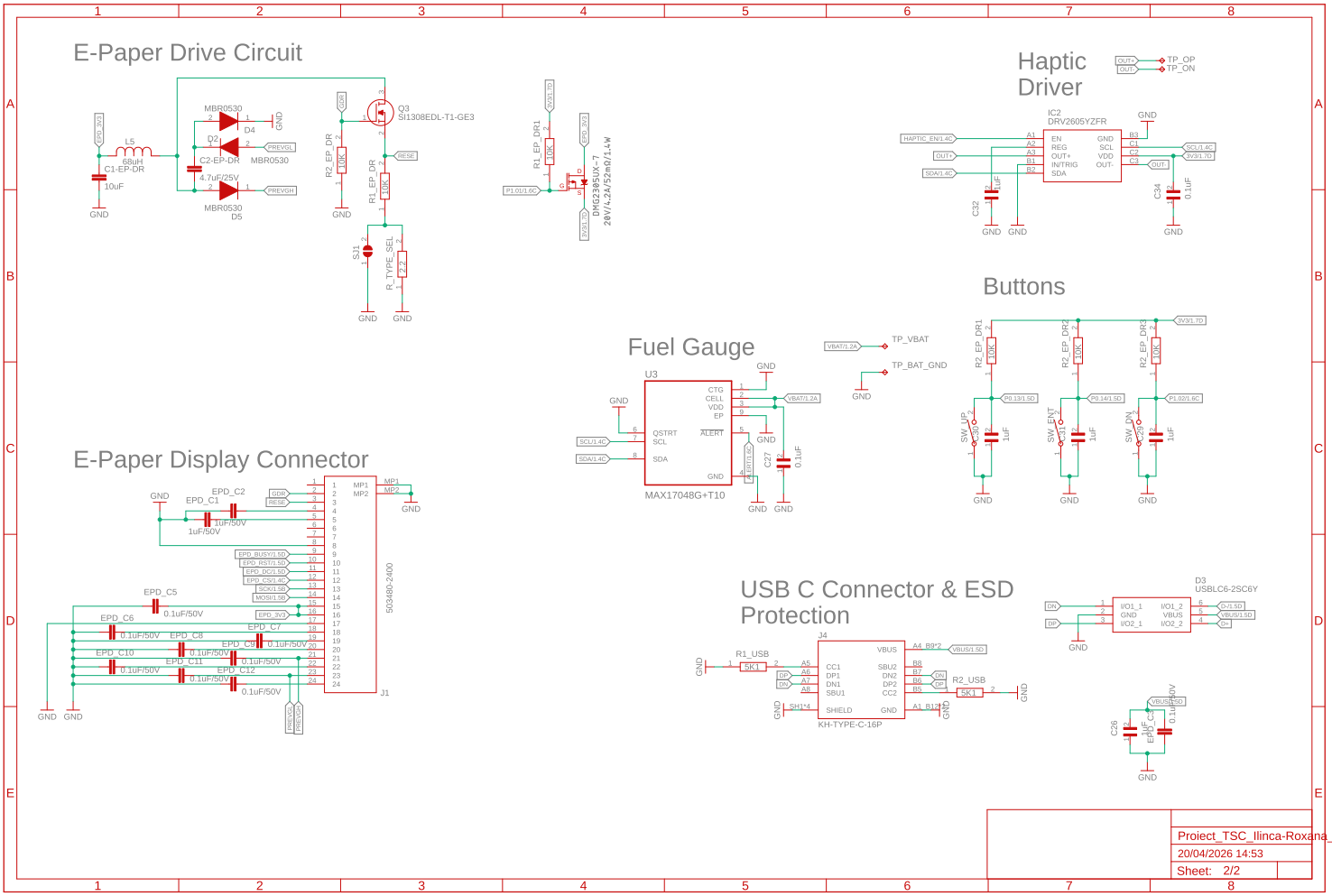

Proiect_TSC_Ilinca-Roxana_Tololoi
20/04/2026 14:53
Sheet: 2/2