Dynamic and Steady-State Modeling of FACTS Devices for Power Quality Enhancement in Electric Power Systems

Royalty Holyworth Chihava
Electrical Power and Machines Engineering Department
Gijón Polytechnic School of Engineering
Gijón, Spain

Abstract— Flexible AC Transmission Systems (FACTS) devices offer a powerful solution for mitigating these power quality concerns by providing fast-acting dynamic compensation. This report focuses on proposing the implementation of FACTS devices on the power system network to enhance overall power quality and system performance [1]-[3]. Two distinct modeling domains for FACTS devices are introduced and investigated: dynamic modeling and phasor average modeling. The dynamic modeling approach employs a detailed 48-pulse three-level multipulse GTO-based converter model, along with its associated control structure. Conversely, the phasor average modeling technique utilizes simplified algebraic equations to characterize the steady-state performance of FACTS devices, facilitating system-level studies. Simulation results validate the effectiveness of the proposed FACTS device configurations in mitigating power quality disturbances and improving overall system operation.

I. The System Under Test and the Need for Compensation

Figure 1 describes the represented system under study. Bus 4 is the farthest from both generation sources and the most likely to experience voltage dips when subjected to heavy load connections. To investigate this, a shunt heavy inductive load with a power factor of 0.85 (a common value in industry) will be connected to this bus. The load will be gradually increased, and the steady-state voltages at buses 1, 2, 3, and 4 will be measured.

For the purpose of this study, a three-phase RL (resistive-inductive) load is considered, modeled as a constant impedance load. A constant impedance load is characterized by a load impedance that remains constant, regardless of changes in the voltage magnitude. This means that as the voltage varies, the current drawn by the load changes proportionally, resulting in a corresponding change in the active and reactive power consumption.

The constant impedance model is the most appropriate choice for this type of load because it closely represents the behavior of many industrial loads, such as motors, furnaces, and heating elements, which exhibit a relatively constant impedance over a wide range of voltage variations.

Table 1 provides the load specifications, including the active power (P) and reactive power (Q) values, for each test case, ranging from 0 to 1000 MVA. These values are calculated based on the constant impedance assumption, a line-to-line voltage of 500 kV, and a power factor of 0.85 lagging, which is a common value encountered in industrial applications.

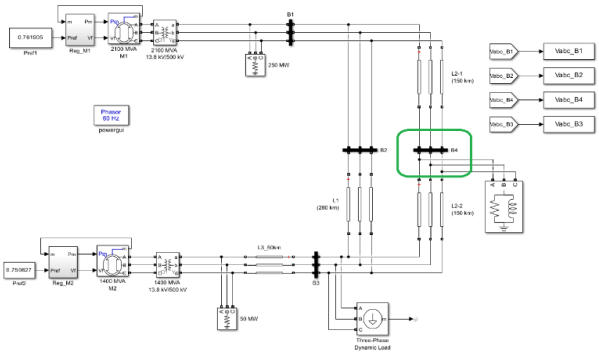

Fig. 1 The proposed system configuration

Table 1: Three-Phase RL Constant Impedance Load Specifications

Load Rating (MVA)	Active Power (P) in MW	Reactive Power (Q) in MVAR
0		0
100	85	52.7
200	170	105.4
300	255	158
400	340	210.7
500	425	263.4
600	510	316.1
700	595	368.7
800	680	421.4
900	765	474.1
1000	850	526.8

Table 2 and Fig. 2 show the steady-state voltage for these buses under this test. It can be seen that bus 4 experiences the most significant voltage dip, and at a load of almost 500 MVA, it experiences an undervoltage condition of 0.97 per unit voltage.

The STATCOM (Static Synchronous Compensator) FACTS device represents a powerful option to regulate the voltage at bus 4. The STATCOM regulates voltage by injecting or absorbing reactive power (VARs) to or from the power system. When the system voltage starts to decrease, the STATCOM generates reactive power (capacitive mode) and injects it into the system, which helps support the voltage level [4], [5]. Conversely, when the system voltage increases above the desired level, the STATCOM absorbs reactive power (inductive mode) from the system, thereby regulating the voltage. To determine the STATCOM's rating that can keep the voltage within a 3% envelope ($\Delta V = 3\%$), reactive power compensation will be added to the bus, as shown in Table 3 and Fig. 3. When the reactive power is between 200-300 VAR, the voltage levels at bus 4 and the nearby buses are enhanced to be within the preferred limits.

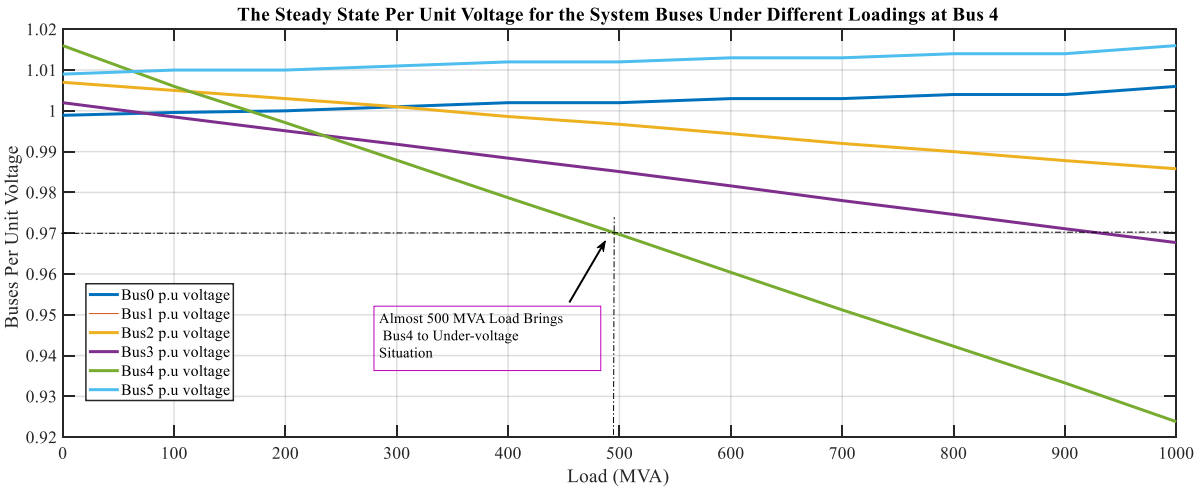

Fig. 2 The Buses Voltage profile while changing the load at Bus 4

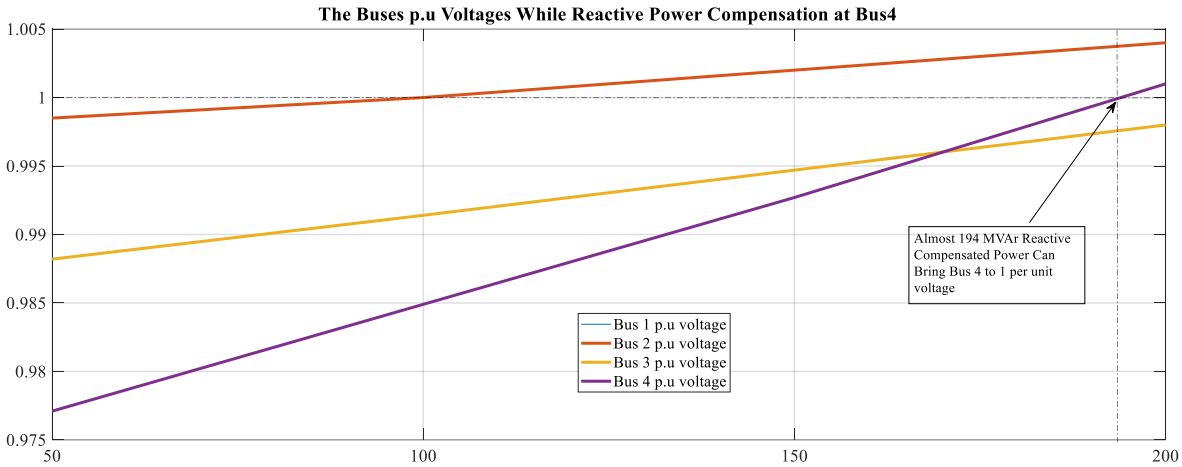

Fig. 3 The Buses Voltage profile while reactive Power Compensation at Bus 4

Table 2: The per unit steady state voltage values for the four buses under each test case.

Test case	Bus 1 p.u voltage	Bus 2 p.u voltage	Bus 3 p.u voltage	Bus 4 p.u voltage
1	1.007	1.007	1.002	1.016
2	1.005	1.005	0.9985	1.006
3	1.003	1.003	0.9951	0.9971
4	1.001	1.001	0.9918	0.9879
5	0.9986	0.9986	0.9884	0.9787
6	0.9967	0.9967	0.9851	0.9697
7	0.9944	0.9944	0.9816	0.9604
8	0.992	0.992	0.978	0.9512
9	0.99	0.99	0.9746	0.9423
10	0.9878	0.9878	0.9711	0.9333
11	0.9858	0.9858	0.9677	0.9238

Table 3: The per unit steady state voltage values for the four buses while compensating reactive power at Bus4.

Compensated reactive power (MVAr)	Bus 1 p.u voltage	Bus 2 p.u voltage	Bus 3 p.u voltage	Bus 4 p.u voltage
50	0.9985	0.9985	0.9882	0.9771
100	1	1	0.9914	0.9849
150	1.002	1.002	0.9947	0.9927
200	1.004	1.004	0.998	1.001

II. Construction and simulation of a 48-pulse grid following converter

The 48-pulse converter was constructed using 8 6-pulse NPC converters. This was done by using 8 sinusoidal inputs as reference signal to the 8 6-pulse converters and these were then used together with the information of the desired zero voltage duration (alpha) to generate the required gate signals to the converters. The 8 reference sinusoidal inputs used to generate the 48 pulses are shown below:

[1] $\sin(wt + \Phi + 11.25^\circ)$
[2] $\sin(wt + \Phi - 18.75^\circ)$
[3] $\sin(wt + \Phi - 3.75^\circ)$
[4] $\sin(wt + \Phi - 33.75^\circ)$
[5] $\sin(wt + \Phi + 3.75^\circ)$
[6] $\sin(wt + \Phi - 26.25^\circ)$
[7] $\sin(wt + \Phi - 11.25^\circ)$
[8] $\sin(wt + \Phi - 41.25^\circ)$

where Φ is the angle of the output signal (phase A) and the other angles in the sine argument are the ones used to generate the 48-pulse. It should be noted that to generate phase B and phase C output we use the 8 sinusoids above as inputs but shifted by -120 and +120 degrees respectively. This results in the following 3-phase fundamental voltage output of the 48-pulse converter: Va = $V\sin(wt + \Phi)$, Vb = $\sin(wt + \Phi - 120^\circ)$, Vc = $V\sin(wt + \Phi + 120^\circ)$.

To generate the gate signals to the IGBTs of the individual 6 -pulse NPC converter the code used in the simulation is shown below:

```
function [SG1, SG2, SG5, SG6, SG9, SG10] = fcn(Va,Vb,Vc,alpha)
SG1 = 0; SG2 = 0; SG5 = 0; SG6 = 0; SG9 = 0; SG10 = 0;
if Va >= 0
   if Va < sind(alpha)
      SG1 = 0;
      SG2 = 1;
   end
   if Va >= sind(alpha)
      SG1 = 1;
      SG2 = 1;
   end
end
if Va < 0
   if Va > sind(alpha + 180)
      SG1 = 0;
      SG2 = 1;
   end
   if Va <= sind(alpha + 180)
      SG1 = 0;
      SG2 = 0;
   end
end
if Vb >= 0
   if Vb < sind(alpha)
      SG5 = 0;
      SG6 = 1;
   end
   if Vb >= sind(alpha)
      SG5 = 1;
      SG6 = 1;
   end
end
if Vb < 0
   if Vb > sind(alpha + 180)
      SG5 = 0;
      SG6 = 1;
   end
   if Vb <= sind(alpha + 180)
      SG5 = 0;
      SG6 = 0;
   end
end
if Vc >= 0
   if Vc < sind(alpha)
      SG9 = 0;
      SG10 = 1;
   end
   if Vc >= sind(alpha)
      SG9 = 1;
      SG10 = 1;
   end
end
if Vc < 0
   if Vc > sind(alpha + 180)
      SG9 = 0;
      SG10 = 1;
   end
   if Vc <= sind(alpha + 180)
      SG9 = 0;
      SG10 = 0;
   end
end
```

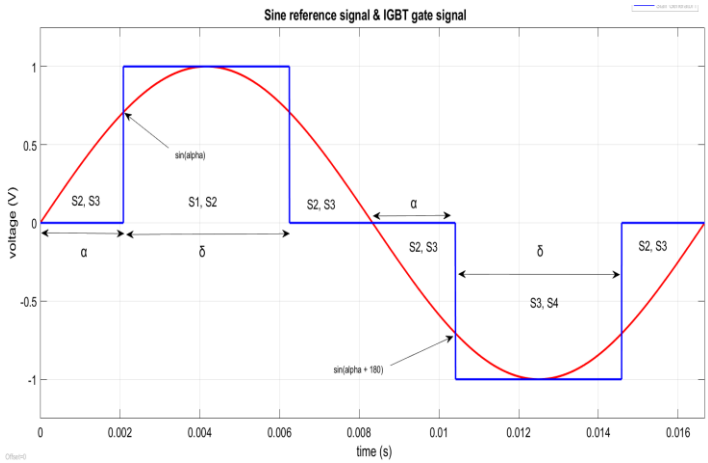

Fig. 4 Sine reference signal & IGBT gate signal

From the above figure we can deduce what the generated code is doing. The sinusoidal signal above represents Va in the code so for positive values of the sinusoid smaller than sin(α) switches 2 and 3 are switched on. In the code we switch off switch 1 (SG1) and switch on switch 2 (SG2) because switch 1 state is always opposite to that of switch 3 and switch 2 state opposite to switch 4 state. The condition for switching switches 1 and 2 on is when we are in the positive half cycle and the value of the sinusoid is greater than sin(α). For the negative half cycle of the sinusoid switches 2 and 3 are on when sin(α + 180) is greater than the negative value of the sinusoid. Switches 3 and 4 are switched on for sin(α + 180) less than the negative values of the reference sinusoid (Va). Using different sine reference signal (Vb & Vc) and the illustrated switching sequence for phase A the gate signal pattern of the remaining 2 legs of a 3 phase 6-pulse NPC converter are formulated. It should be noted that Va = $\sin(wt + \Phi + 11.25^{\circ})$ is the phase A reference sinusoidal signal input to the first 6-pulse NPC converter and by shifting the angle by -120 and +120 degrees we can get the sinusoidal reference signal for phase B (Vb) and phase C (Vc) respectively. The phase A sinusoidal reference signal for the remaining 7 6-pulse NPC converters is the one listed above from [2] to [8].

Calculation of the value of Vdc for the 48-pulse NPC converter

The grid generator used in the simulation had the following 3 phase output waveforms:

- Phase A = 10kV × sin (wt)
- Phase B = 10kV × sin (wt -120)
- Phase C = 10kV × sin (wt + 120)

where 10kV is the rms phase voltage magnitude and w = $2\pi 60$ rad/s. The desired maximum peak voltage magnitude of the 48-pulse converter was 10% higher than the maximum peak voltage of the 3-phase grid generator source. The higher the peak voltage magnitude of the converter the higher the value of capacitive reactive power injected into the grid. Using Fourier analysis, the voltage peak value of the fundamental sinusoid we get from the output 48-pulse voltage signal is approximately equal to the peak voltage magnitude of this 48-pulse voltage signal. From the above information the value of the DC bus voltage of an individual 6-pulse NPC converter was calculated as follows:

$$V_{peak_phase_conv} = 1.1 \times 10000 \times \sqrt{2} = 15556.35V$$

$$\text{Peak voltage of the 1st 6} - \text{pulse converter} = \frac{2Vdc}{3}$$

To generate a 12-pulse we add 2 6-pulse converters, but we add the phase signal output of the first 6-pulse converter to a phase-to-phase signal output of the second 6-pulse converter. The resultant phase angle of the fundamental sinusoid of the output signal is equal to the input reference sinusoidal signal of the first 6-pulse converter because the input reference sinusoidal signal of the second 6-pulse converter is delayed by a phase of 30 degrees when compared to the input reference sinusoidal signal of the first 6-pulse converter and since the input reference sinusoidal signal is delayed 30 degrees when we take the phase-to-phase output signal it will have an overall phase angle difference to the output of first 6-pulse converter of 0 degrees.

$\text{Peak voltage of the 2nd } 6-\text{pulse converter} = \text{Vdc}$

The 8 6-pulse NPC converters are connected each to a 3-phase transformer. The transformers are 4 1:1 transformer and 4 $\sqrt{3}$:1 transformer. All the 6-pulse NPC converters which we take the phase-to-phase voltage output are the ones connected to a $\sqrt{3}$:1 transformer. To make a 48 pulse NPC converter we need to add the resultant output waveform of 4 12-pulse converters. Each 12-pulse converter is a summation of 2 6-pulse converter and for a 12-pulse we require one 1:1 transformer and one $\sqrt{3}:1$ transformer.

$\text{Peak voltage of the 2nd } 6-\text{pulse converter} = \frac{Vdc}{\sqrt{3}}$ where $\frac{1}{\sqrt{3}}$ comes from the $\sqrt{3}$:1 transformer.

$$Voltage\ output\ of\ a\ 12-pulse\ converter = \frac{2Vdc}{3} + \frac{Vdc}{\sqrt{3}}$$

Since we have 4 12-pulse converters to make a 48-pulse the output peak voltage of each 12-pulse is $15556.35V \div 4 = 3889.08V$.

$\frac{2Vdc}{3} + \frac{Vdc}{\sqrt{3}} = 3889.08V$ where Vdc = 3126.23V≅3126V

Determination of the Zero-voltage duration

The zero-voltage duration which is represented by the angle alpha above is varied so as to change the magnitude of the voltage output sinusoidal signal of the 48-pulse. As the angle alpha increases the magnitude of the fundamental sinusoid we obtain from Fourier analysis decreases. The equation of the amplitude of the fundamental sinusoid as a function of the angle alpha is shown below:

$$V(t)_1 = \frac{2Vdc}{\pi}\sin(\alpha + {}^{\delta}/_{2})\sin({}^{\delta}/_{2})\sin(w_0 t) \qquad (1)$$

$$\alpha = \frac{\pi - \delta}{2} \qquad (2)$$

where α and δ are the angles shown in Fig.4. Below is a figure showing the magnitude of the fundamental voltage and other harmonics as the zero-voltage goes from 0 to 180 degrees:

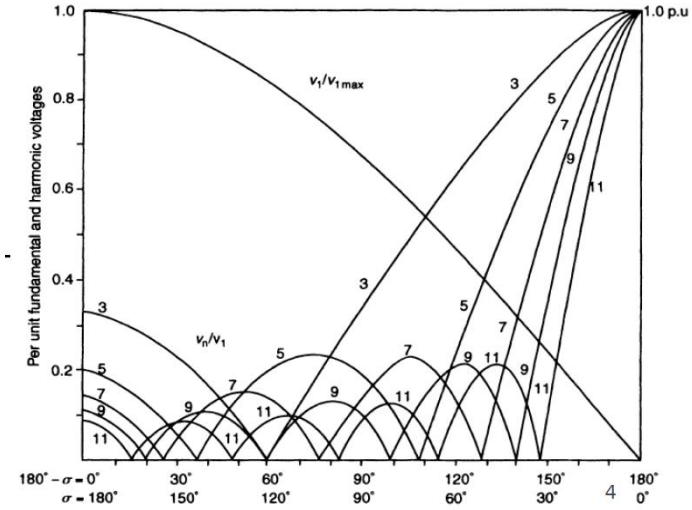

Fig. 5 Fundamental and harmonic voltages (in pu) as function of zero-voltage duration

It can be noted that the amplitude of the fundamental voltage follows a cosine function as the zero-voltage duration goes from 0 to 180 degrees. Hence, the code used in the simulation to get the angle alpha required to get a certain output voltage amplitude of the 48-pulse was as follows:

```
function alpha = fcn(mag)
x = 15495;
if mag < x
alpha = acosd(mag/x);
else
    alpha = 0;
end
```

Discussion of simulation results of the 48-pulse converter

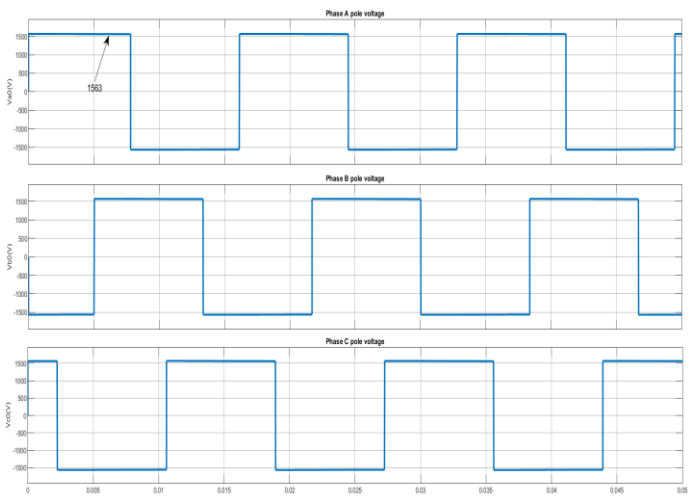

Fig. 6 Pole voltage when α = 0˚

When α is 0 degrees the pole voltage goes from Vdc/2 (1563V) to -Vdc/2 (-1563V). Hence, there is no zero-voltage state in the pole voltage waveform (S2 & S3 will not be on at the same time). If you do a Fourier analysis this results in the highest pole voltage amplitude because this type of waveform results in a modulation index of $4/\pi$ if triangular carrier PWM technique was used.

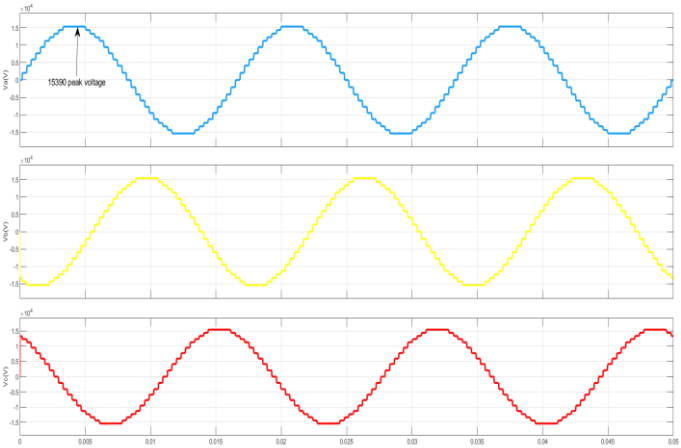

Fig. 7 48-pulse phase output voltage when α = 0˚

The peak phase output voltage of the 48-pulse is 15390V which is close to the calculated value of 15556.35V. This difference is due to the voltage drop introduced by the transformer reactance.

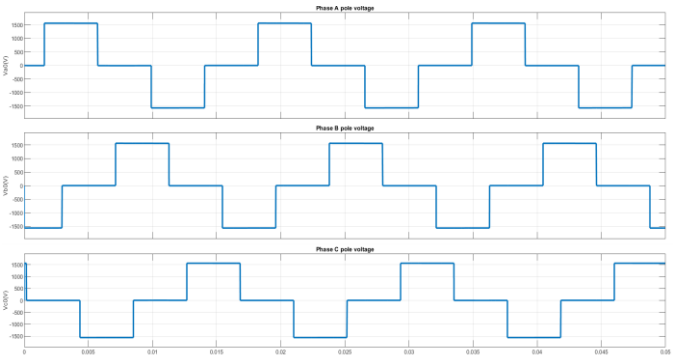

Fig. 8 Pole voltage when α = 45˚

For a zero-voltage angle of 45 degrees the converter becomes a 3-level NPC converter and the zero-voltage switching state (S2 & S3 on) is now available.

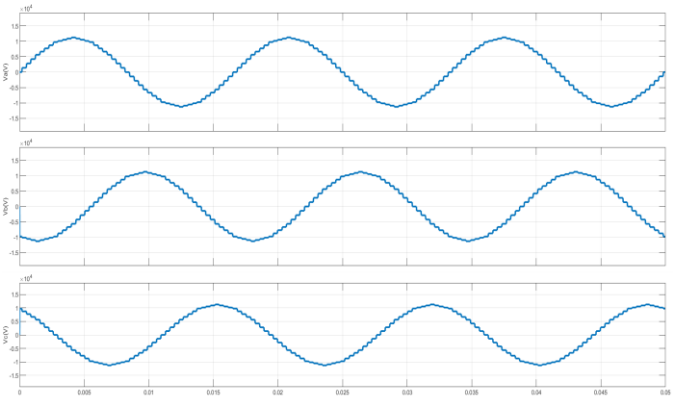

Fig. 9 48-pulse phase output voltage when α = 45˚

It can be noticed that as alpha increases the magnitude of the output voltage waveform of the 48-pulse decreases. It also worth noting that phase angle of the output voltage of the 48-pulse is not changed by adjusting alpha. To change the phase angle of the output voltage we have to change the firing angles of the IGBTs either by delaying or advancing the time when the IGBTs are switched on. To do this we need to change the reference sine wave used to generate the switching sequence (SPWM). This type of control where the output voltage of a converter is changed by varying the zero-voltage duration is called direct control.

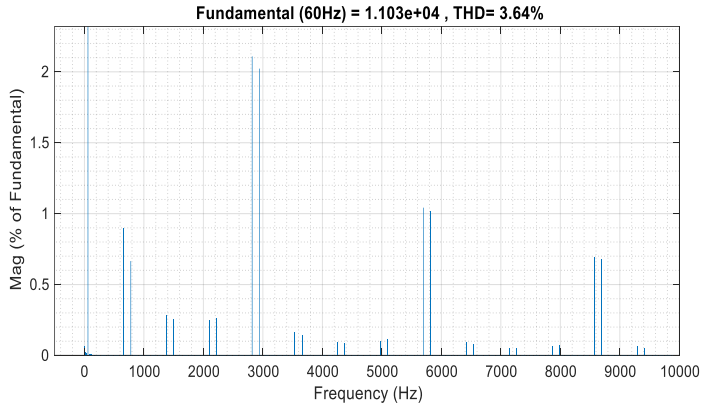

Fig. 10 THD analysis of a 48-pulse converter

A 48-pulse converter has a very low harmonic content. Even though the switching frequency of the IGBTs is low we still get a very good THD value (3.64%). This is why this technique of generating multi-pulse converters is used in high power systems as the issues of switching losses is mitigated since our switching frequency is very low as compared to the switching frequency of triangular based carrier SPWM which can be up to 10kHz.

Filter Design

To improve the quality of the current waveform injected into the grid an RL low pass filter was designed. The transfer function of a low pass RL filter and the formula to calculate the cutoff frequency of the filter are shown below:

$$\frac{V_{out}}{V_{in}} = \frac{R}{R + jwL} = \frac{R}{\sqrt{R^2 + (wL)^2}} \lfloor -\tan^{-1}({}^{wL}/_{R}) \qquad (3)$$

$$f_{cutoff} = {}^{R}/_{2\pi L} \qquad (4)$$

The cutoff frequency which was chosen was 500Hz and the value of R and L calculated were 44.64Ω and 14.2mH.

Power System Modelling

To analysis the whole system a mathematical model of the system was determined in the dq-axis domain. The system to be modelled is shown below:

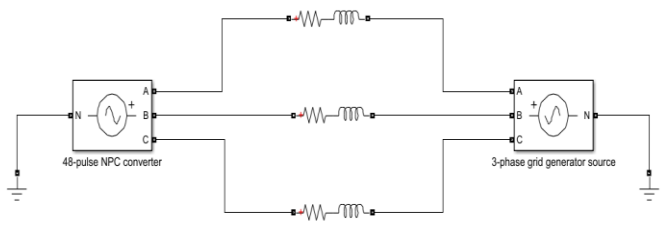

Fig. 11 Converter connected to the grid via an RL branch

The mathematical model of the above system in the synchronous reference frame is represented by the equations shown below:

$$V(s)_{conv_d} = RI(s)_d + LsI(s)_d - wLI(s)_q + V(s)_{grid_d} \quad (5)$$

$$V(s)_{conv_q} = RI(s)_q + LsI(s)_q + wLI(s)_d \quad (6)$$

A graphical representation of the equations above is shown in figure 12.

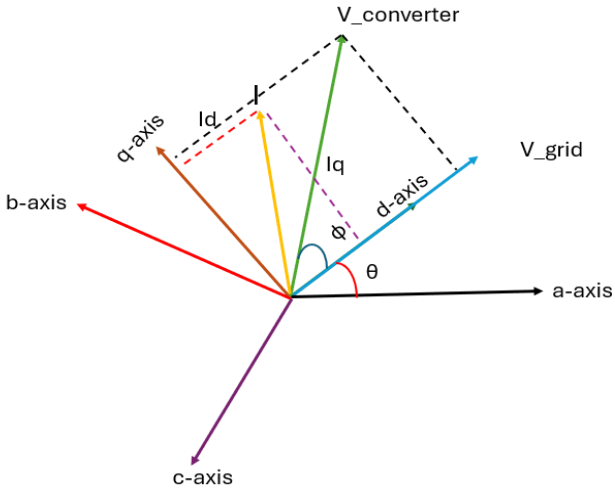

Fig. 12 Converter voltage, grid voltage and RL branch current space vectors in the synchronous reference frame

By synchronizing the grid voltage space vector with the d-axis we can be able to control the active power and reactive power we inject into the grid separately. Hence, this results in the design of 2 current controllers. The first current controller is responsible for active power control, and this is done by making sure that the corresponding Id current which gives the demanded active power flows into the system. The second current controller is responsible for reactive power control, and this is done by making sure that the corresponding Iq current which gives the demanded reactive power flows into the system. The relationship between apparent power and current is given below:

$$Active\ Power\ demanded = \frac{3}{2} V_{grid_d} I_d \quad (7)$$

$$Reactive\ Power\ demanded = -\frac{3}{2} V_{grid_d} I_q \quad (8)$$

It should be noted that the values of Id, Iq and grid voltage are peak values not rms values.

PLL and Current controller design

Since we need to lock the grid voltage space vector to the d-axis in the synchronous reference frame we need to design a phase-locked loop. Also, as explained in the previous section we need to design also current controllers in order to ensure that we inject the demanded active and reactive power into the grid. The closed loop transfer function of the controllers and the system (plant) will be a second order transfer function of the form shown below:

$$G(s)_{CL} = \frac{\omega_n{}^2}{s^2 + 2\zeta\omega_n s + \omega_n{}^2} \quad (9)$$

where ω_n is the natural frequency and ζ is the damping ratio. The closed loop system used to design the PLL controller is shown below:

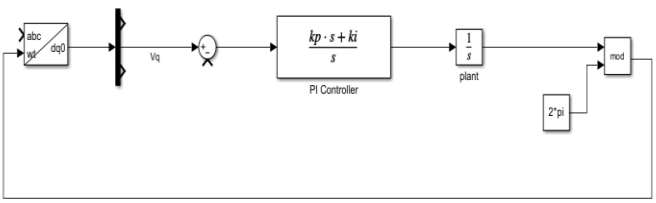

Fig. 13 PLL closed loop system

The damping ratio was chosen to be 0.75 and the natural frequency chosen to be 15Hz. By using the following formula:

$$s^2 + 2\zeta\omega_n s + \omega_n{}^2 = s^2 + k_p s + k_i$$

the value of ki and kp calculated were 8882.64 and 141.372 respectively. The mod block is used to divide the output coming out of the integrator by 2π and output the remainder. This is done because we want the output angle to be periodic and with a period of 2π. The closed loop system used to get the values of ki and kp for the current controller is shown below:

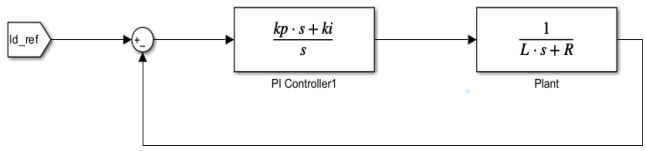

Fig. 14 Current controller closed loop system

The values of the inductor and the resistance were obtained from the RL branch connecting the grid voltage source and the 48-pulse converter. Their values were 16.58mH and 0.8929Ω. The natural frequency was chosen to be 300Hz and a damping ratio of 1. By using the following formula:

$$s^2 + 2\zeta\omega_n s + \omega_n{}^2 = s^2 + \frac{R + k_p}{L} s + \frac{k_i}{L}$$

the value of ki and kp calculated were 58909.69 and 61.61 respectively. The same current controller design was used for both Id and Iq currents. It should be noted that outer PI controllers (current) are designed to have a faster dynamic response than the inner controllers (PLL).

Simulation Results and Discussion of the control of a Grid connected 48-pulse converter

i. Converter Open-Loop Control Analysis

The open-loop control of the 48-pulse converter is implemented using two equations derived from active and reactive power flow between two sources connected by a lossless branch (with only inductive reactance X = 2πfL). These equations are:

$$\tan(\delta) = \frac{PX}{E^2 - QX} \quad (10)$$

$$V = \frac{E^2 - QX}{\cos(\delta)} \quad (11)$$

Where P is the active power, Q is the reactive power, E is the grid voltage, V is the converter voltage, X is the inductive impedance, and δ is the power angle. Using these formulas, the converter's output voltage reference is calculated directly. This reference signal is then used to generate the PWM gating signals for the IGBTs in the 48-pulse converter. This approach differs from the closed-loop system, where d and q components are generated by two current controllers. In the open-loop configuration, these controllers are bypassed, and the voltage reference is determined solely from the desired power flow and system parameters.

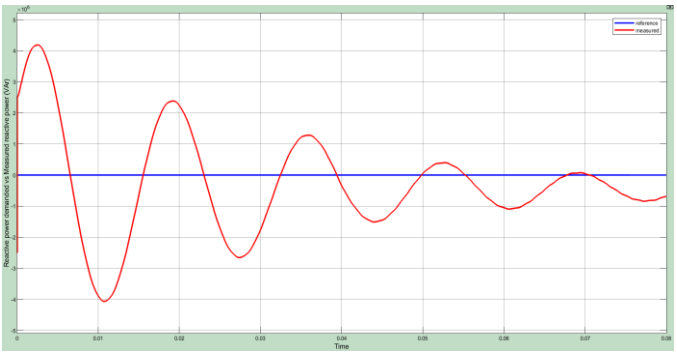

Fig. 15 Reactive power demanded vs Measured reactive power (open-loop control).

Fig.15 demonstrates the limitations of open-loop control when applied to a 48-pulse converter for reactive power regulation. While the system attempts to track the reference reactive power demand, it exhibits significant steady-state errors and lacks robustness against disturbances. This performance deficit stems from several factors inherent to open-loop control. The absence of a feedback mechanism prevents the system from accurately assessing whether the demanded reactive power is being delivered, leading to persistent errors. Unlike closed-loop systems where Id and Iq independently regulate active and reactive power, the open-loop control allows interactions between active and reactive power calculations, exacerbating steady-state errors. Furthermore, the system's inability to compensate for large disturbances results in poor tracking performance under such conditions. The open-loop nature also prevents the system from making real-time adjustments to meet the desired reactive power flow.

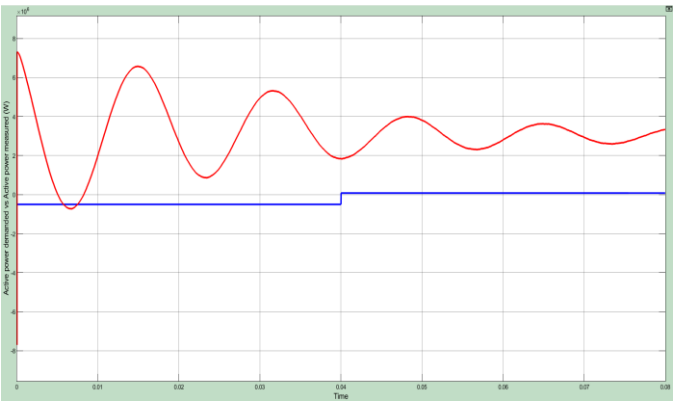

Fig. 16 Active power demanded vs Measured active power (open-loop control).

The open-loop control system's performance in tracking both active and reactive power references is significantly hampered by the inherent coupling between these power calculations. This interdependence makes it challenging for the system to simultaneously meet both active and reactive power demands accurately. Consequently, while the control system attempts to follow the active power reference signal, it results in a notable steady-state error. This limitation underscores a key weakness of open-loop control in grid-connected converters, where precise and independent regulation of active and reactive power is often crucial for optimal system operation and grid stability.

ii. Converter Closed-Loop Control Analysis

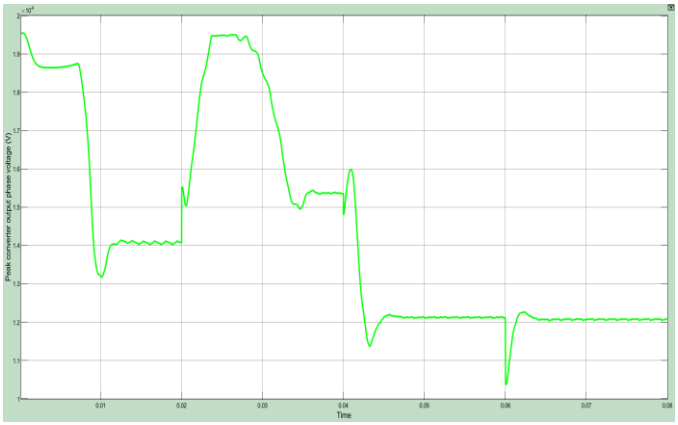

Fig. 17 The fundamental Output Voltage Peak of a 48-pulse converter

The simulation results reveal that the significant disturbance at the initial time (t = 0 seconds) caused the current controllers to generate a voltage magnitude exceeding the designed converter's maximum peak voltage capability. This overreach led to integrator windup in the PI controllers, potentially causing prolonged overshoot and instability. To mitigate this effect, an anti-windup technique was implemented using the built-in features of the Simulink PI controller block. This anti-windup mechanism prevents the integrator from accumulating error beyond the converter's operational limits, thereby improving the system's transient response and overall stability during large disturbances.

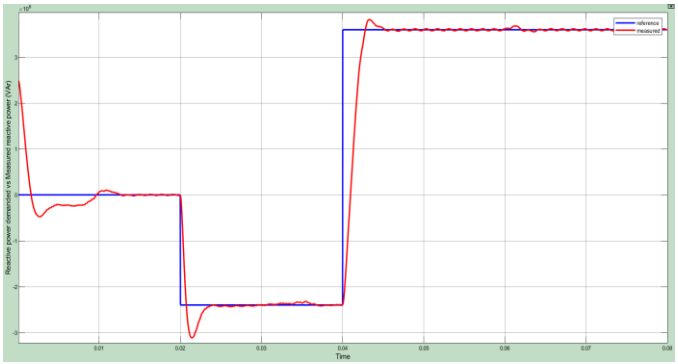

Fig. 18 Reactive Power Demanded vs Reactive Power measured.

The simulation results demonstrate that the designed reactive current controller effectively tracks the reference input current (Iqref), with the implementation of an anti-windup technique significantly enhancing the system's dynamic response. Analysis of Fig.14 and Fig.15 reveals key insights into the converter's reactive power behaviour. When the reactive power is negative (between 0.0375s and 0.04s), the converter supplies reactive power to the grid, resulting in a converter voltage magnitude exceeding the peak grid voltage of 14.142kV. Conversely, when the reactive power is positive (between 0.056s and 0.06s), the converter absorbs reactive power from the grid, causing its voltage magnitude to drop below 14.142kV. These voltage magnitude variations align with fundamental principles of reactive power flow: a higher converter voltage corresponds to reactive power injection into the grid, while a lower voltage indicates reactive power absorption from the grid.

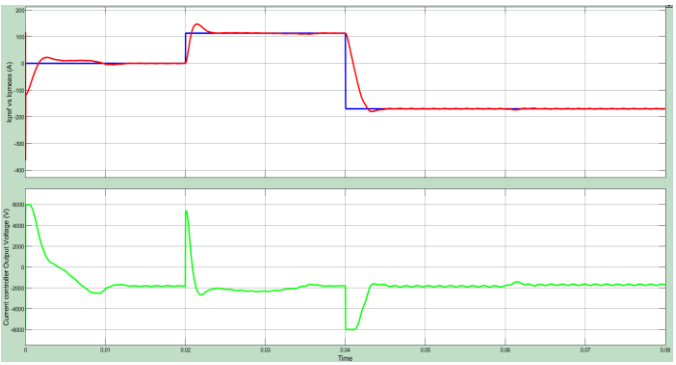

Fig. 19 Reactive current and reactive current controller output voltage

Reactive current (Iq) direction determines the converter's reactive power exchange with the grid. Positive Iq injects reactive power, while negative Iq absorbs it. Fig.16 illustrates the system's response to abrupt changes in reactive power demand. At the simulation start (t=0), the sudden change in reactive power requirement caused the current controller output to reach its saturation limit, resulting in controller wind-up as previously discussed. A second significant disturbance occurred at t=0.04s, when a positive reactive power step change was introduced. However, in this instance, the controller wind-up was minimal, and the dynamic response was notably faster. This improved performance stems from the brief controller output saturation and the converter's operational state, as opposed to a cold start.

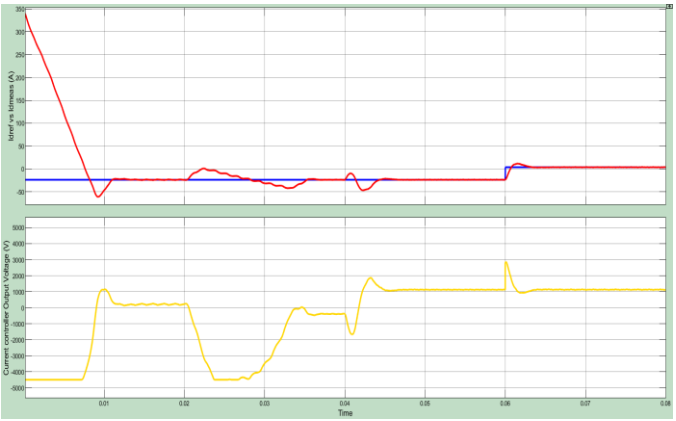

Fig. 20 Active current and active current controller output voltage.

Fig. 21 Converter fundamental output voltage phase angle.

Fig. 20 and Fig. 21 demonstrate the relationship between active current (Id) and power flow. When Id is negative, the converter supplies active power to the grid. This is evidenced by the converter phase angle of 8 degrees, which exceeds the grid phase angle of 0 degrees. This phase difference between the converter output voltage and the grid voltage directly influences active power flow. The greater angle of the converter voltage relative to the grid voltage results in power transfer from the converter to the grid, aligning with fundamental power system principles. This observation underscores the critical role of phase angle control in managing active power exchange between the converter and the grid.

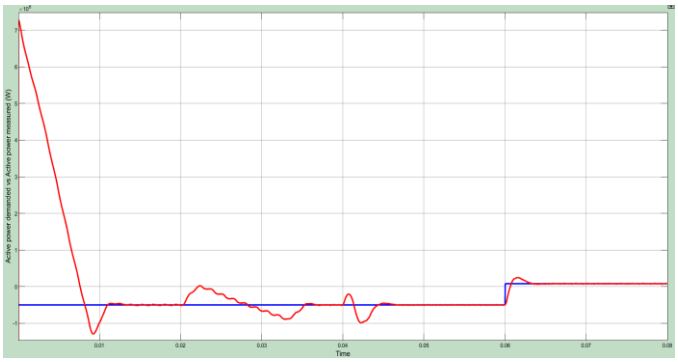

Fig. 22 Active Power Demanded vs Active Power measured.

The graphs of active power and active current (Id) exhibit identical shapes, demonstrating effective decoupling of active and reactive power control. This decoupling is crucial for independent management of real and reactive power flows. Furthermore, the active power current controller accurately tracks the reference input signal, validating the proper design and tuning of the PI controller.

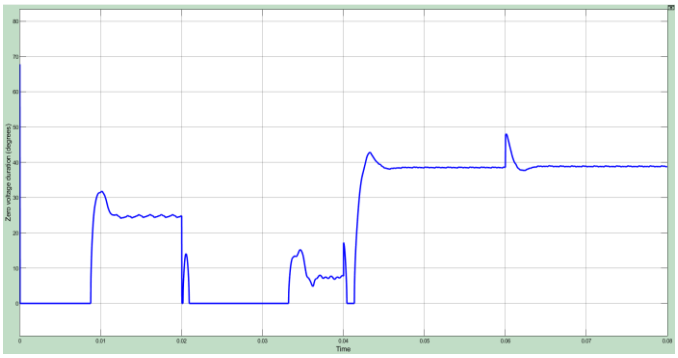

Fig. 23 Zero voltage duration.

The results from Fig. 17 and Fig. 23 demonstrate the effectiveness of direct control strategy in regulating the 48-pulse converter's output voltage. This method manipulates the zero voltage duration (angle) of the pole voltages in each of the eight 6-pulse converters that constitute the 48-pulse system. The overall converter output voltage magnitude varies inversely with this angle. At 0 degrees, the system produces its maximum output voltage, while the magnitude progressively decreases as the angle increases, reaching zero at 90 degrees.

III. Average Phasor Modelling of the STATCOM

A phasor model is a steady-state representation of a power system, where the sinusoidal quantities (voltages and currents) are represented by their phasor equivalents at the system fundamental frequency. It assumes that the system is operating under balanced, sinusoidal conditions, and neglects the transient dynamics.

In the phasor model, the STATCOM (Static Synchronous Compensator) is represented as a variable voltage source. This representation involves connecting the voltage source to an ideal transformer and an RL (resistance-inductance) branch to account for its impedance. The phasor model focuses on voltage

differences and current computations, which simplifies the system's analysis and control.

A. Power Components Modeling (Shunt Converter)

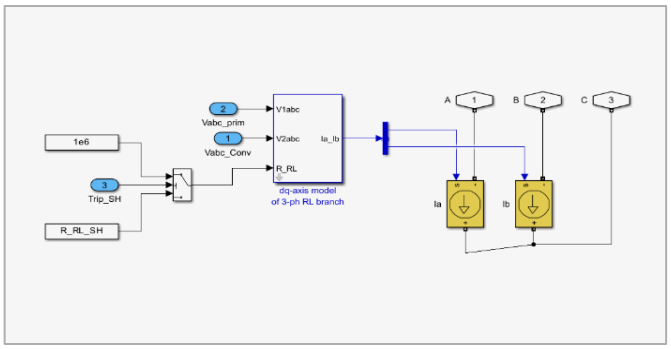

Fig. 24 STATCOM representation

The first subsystem, "Power Components Modeling (Shunt & Series Converter)," is responsible for modeling the shunt converter, which is a crucial component of the STATCOM. As shown in Fig.24, the shunt converter is represented by a variable voltage source connected to an ideal transformer and an RL branch. The RL branch accounts for the impedance of the STATCOM, which is essential for determining the current flow. The voltage at the Point of Common Coupling (PCC) is represented by the input signal Vabc_prim. The voltage difference between the STATCOM (Vabc_Conv_SH) and the PCC (Vabc_prim) is applied across the RL branch, which determines the current flow (Ia_Ib). The current signal Ia_Ib is then used to drive two linear current sources, representing the power stage modeling of the shunt converter. These current sources mimic the behavior of the STATCOM's power electronics, injecting or absorbing reactive power to regulate the voltage at the PCC.

The trip function in a STATCOM system is a protective mechanism that disconnects the STATCOM from the power grid under abnormal conditions. It monitors parameters such as current and voltage and activates the trip signal when abnormalities are detected.

The transformation used to go from abc to dq0 is shown below:

$$\frac{2}{3}\begin{bmatrix} \cos(wt-90) & \cos(wt-90-120) & \cos(wt-90+120) \\ -\sin(wt-90) & -\sin(wt-90-120) & -\sin(wt-90+120) \\ 1/\sqrt{2} & 1/\sqrt{2} & 1/\sqrt{2} \end{bmatrix}$$

where wt – 90 is used to transform from the stationary α-β reference frame to the rotating dq0 reference frame. This transformation aligns the grid generator's three-phase voltage space vector with the d-axis of the synchronous reference frame. Specifically, it converts the balanced three-phase AC voltages (Va sin(ωt), Vb sin(ωt - 2π/3), and Vc sin(ωt + 2π/3)) into a rotating reference frame where the voltage vector has only a d-axis component, with no q-axis component. Another advantage of this transformation is its simplification of the abc to dq0 conversion process. In the aligned synchronous reference frame, the dq0 equivalent of any balanced three-phase abc signal corresponds directly to the phasor representation of its a-phase component. Specifically, for the three-phase AC voltages Va sin(ωt), Vb sin(ωt - 2π/3), and Vc sin(ωt + 2π/3), the transformation yields Va(1+j0) in the dq-plane, where Vd = Va and Vq = 0.

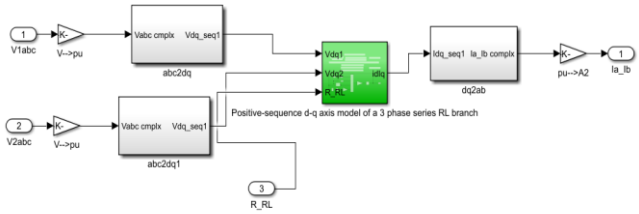

Fig. 25 dq0 model of a STATCOM connected to the grid via an RL branch

To analyze the STATCOM (Static Synchronous Compensator) and its behavior within the power system, the process involves converting three-phase voltages on the bus side and converter side to per unit values and then transforming these voltages into the d-q reference frame using the aforementioned abc to dq0 transformation. To convert the voltage signals into per unit, we need to divide by the base peak voltage; however, V_{nom} is the RMS line to line base voltage; that´s why, this value is multiplied by $\frac{\sqrt{2}}{\sqrt{3}}$ to convert it into peak base voltage.

As stated previously, The STATCOM is modeled as a variable voltage source connected to another voltage source representing the point of common coupling (PCC) voltage through an RL branch. This configuration is shown in the following system diagram:

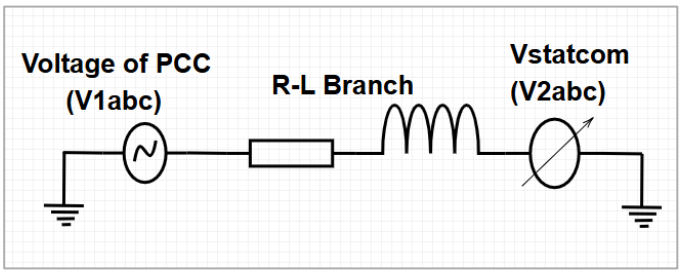

Fig. 26 simplified dq0 model of a STATCOM connected to the grid via an RL branch

In the d-q reference frame, the voltage equations are given by:

$$V_{dq1} - V_{dq2} = RI_{dq} + L\frac{dI_{dq}}{dt}$$

However, differentiation in the d-q axis has two components due to its rotating nature (i.e., $\frac{d}{dt}$ *becomes* $\frac{d}{dt} + j\omega$).

$$V_{d1} - V_{d2} = RI_d + L\frac{dI_d}{dt} - L\omega I_q$$
$$V_{q1} - V_{q2} = RI_q + L\frac{dI_q}{dt} + L\omega I_d$$

By applying the Laplace transform:

$$V_{d1} - V_{d2} = RI_d + LsI_d - L\omega I_q$$
$$V_{q1} - V_{q2} = RI_q + LsI_q + L\omega I_d$$

Converting to Per Unit (pu) Quantities:
Given that:

- $\omega = 2\pi f_{nom}$ (where f_{nom} is the nominal frequency)
- $L_{pu} = \frac{L}{L_{base}} = \frac{L}{\frac{Z_{base}}{\omega}} = \frac{L\omega}{Z_{base}}$
- $\omega_{pu} = \frac{\omega_{actual}}{\omega_{base}} = 1\ p.u$

$$V_{d1}(pu) - V_{d2}(pu) = R(pu)I_d(pu) + \frac{Ls}{\omega_{base}}I_d(pu) - \frac{L\omega}{\omega_{base}}I_q(pu)$$
$$V_{q1}(pu) - V_{q2}(pu) = R(pu)I_q(pu) + \frac{Ls}{\omega_{base}}I_q(pu) + \frac{L\omega}{\omega_{base}}I_d(pu)$$

By satisfying $\frac{\omega}{\omega_{base}} = 1\ p.u$, and rewriting the equations, we get the following equations as shown in Fig.27:

$$I_d(pu) = \frac{\omega_{base}}{Ls}[V_{d1}(pu) - V_{d2}(pu) + LI_q(pu)]$$
$$I_q(pu) = \frac{\omega_{base}}{Ls}[V_{q1}(pu) - V_{q2}(pu) - LI_d(pu)]$$

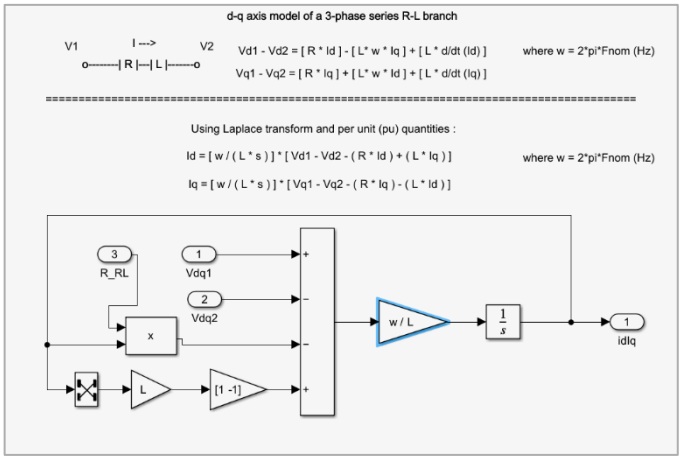

Fig. 27 STATCOM positive sequence dq0 model

B. Output Voltage Computation (Shunt Converter)

The model incorporates a block that calculates the converter output voltage using three key parameters. First, it uses the per unit voltage magnitude. Second, it considers the converter output voltage phase angle, which is derived from two components: the angle between the d and q components of the converter space vector voltage (φ), and the three-phase bus voltage phase angle (θ). These angles are summed to determine the overall phase of the converter output. Third, it factors in the peak phase voltage magnitude (in SI units). Fig. 28 provides a visual representation of this voltage determination process, illustrating how these parameters interact to produce the final converter output voltage.

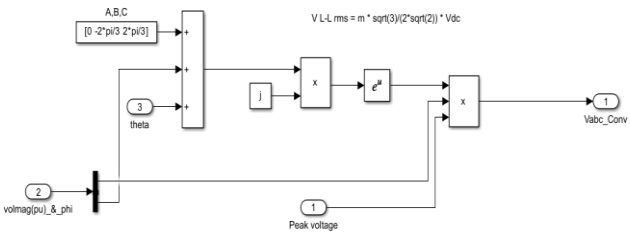

Fig. 28 The converter output voltage computation

C. DC Voltage Computation (Shunt Converter)

The voltage across the DC-link capacitor is continuously monitored and regulated by a specialized circuit block. This block takes as inputs the converter output voltage (Vabc_conv_SH) and current measurements from the converter's AC side. Those signals are used to calculate the active power flow at the AC side of the converter. Assuming negligible switching losses within the converter itself, the active power flowing out of the AC side is equal to the input DC power supplied by the DC bus capacitor. This relationship is governed by the equations shown below, which relates the DC-link capacitor voltage to its capacitance value (C), as shown in Fig.20.

$$P_{AC} = P_{DC} = I_{dc}V_{dc} = V_{dc}C\frac{dv_{dc}}{dt}$$
$$\rightarrow \frac{dv_{dc}}{dt} = \frac{P_{AC}}{CV_{dc}}$$

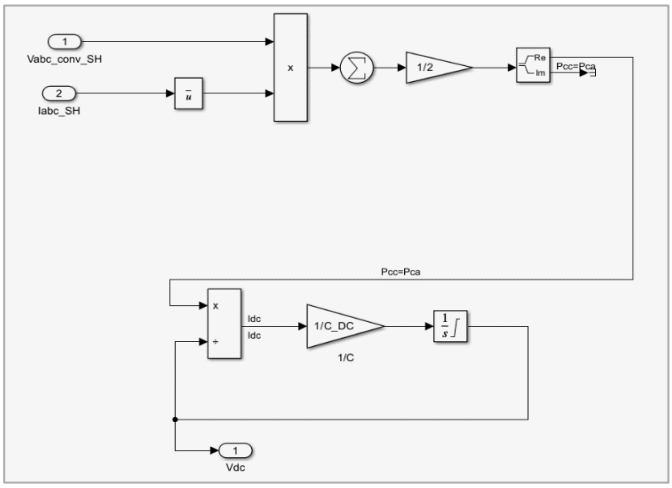

Fig. 29 The converter DC voltage computation

D. Measurement System Sub-system

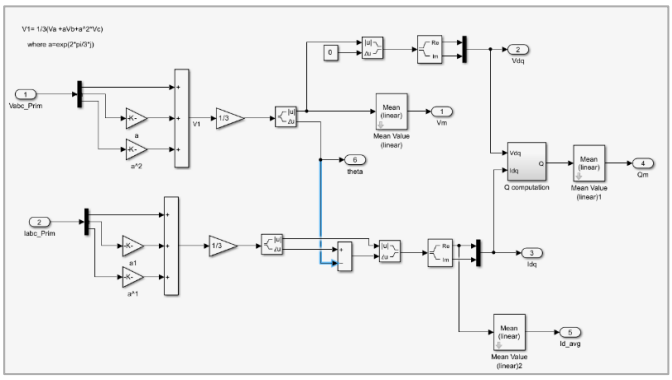

Fig. 30 The measurement circuit.

Fig. 30 depicts the STATCOM Measurement System block, which takes in the three-phase PCC voltage (V_{abc_prim}) and the STATCOM current (I_{abc_prim}) measurements as inputs. The first input (V_{abc_prim}) goes through a gain block ($K=\frac{\sqrt{3}}{V_{nom_SH}*\sqrt{2}}$), which scales the voltage to per unit. The second input (I_{abc_prim}) goes through another gain block ($K=\frac{V_{nom_SH}*\sqrt{3}}{P_{nom_SH}*\sqrt{2}}$), which scales the current to per unit.

The STATCOM control system employs a voltage-oriented control strategy, which begins by converting the three-phase voltage and current measurements at the point of common coupling (PCC) into per-unit quantities using appropriate scaling factors. Subsequently, these per-unit three-phase quantities are transformed into space vector representations using the following relationship:

$$V_1 = V_a + aV_b + a^2V_c$$

Where a = $e^{j\frac{2\pi}{3}}$

The initial abc to dq0 transformation which is represented by the above formula aligns the grid generator voltage (Va sin(ωt), Vb sin(ωt - 2π/3), Vc sin(ωt + 2π/3)) with the d-axis of the synchronous reference frame. However, for voltage-oriented control of the STATCOM, we need to align the bus voltage at the point of common coupling (PCC) with the d-axis instead.

To achieve this, we maintain the magnitude (Vm) of the bus voltage space vector (V1) but set its angle to zero. This new phasor is then converted to its d and q components, effectively aligning the PCC bus voltage with the d-axis.

This realignment necessitates adjusting all other space vectors originally obtained from the grid generator voltage-aligned transformation. For each dq space vector, we preserve its

magnitude but adjust its angle by subtracting the original bus dq voltage vector phasor angle (θ) from its current angle.
For example, the three-phase converter currents are transformed into a space vector representation. The angle between this current space vector and the new d-axis is calculated by subtracting the original bus dq voltage angle (θ) from the current's original angle. This new angle, along with the preserved current magnitude, is used to obtain the updated dq current components (Id and Iq).
Now, the subsystem provides the following outputs: Vm (peak phase voltage magnitude), Vd (d-axis voltage component), Vq (q-axis voltage component, set to zero), Id (d-axis current component), Iq (q-axis current component), and Id_avg (average value of the d-axis current component).

E. The STATCOM Control Subsystem

The STATCOM Control block has four main subsystems which are the AC voltage regulator, DC voltage regulator, DC bus voltage calculation and current regulator.

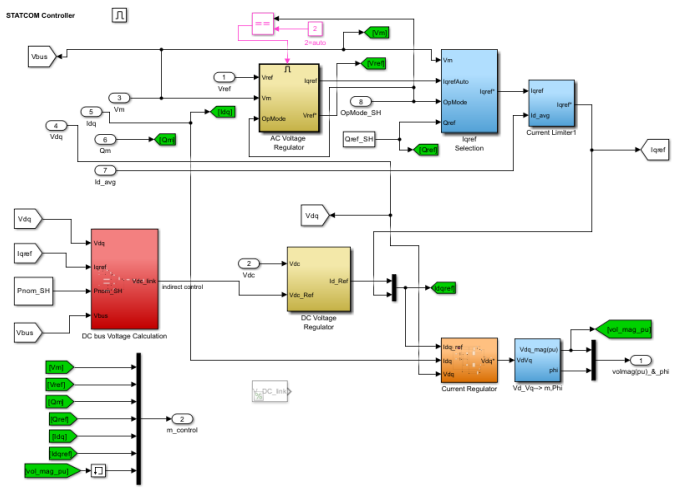

Fig. 31 The STATCOM Control block.

The AC voltage regulator block uses the VI characteristic curve of the STATCOM to derive the required reactive current (Iqref) to bring the bus voltage close to a reference voltage (Vref) which is 1 per unit (500kV rms (line-line)). In order to make sure that the bus voltage aligns with the reference voltage a PI controller was used. It's important to note that the presence of the droop resistance (0.03 p.u.) introduces a small steady-state error in the PI controller's output. Consequently, the regulated bus voltage will not exactly match the reference voltage but will be very close to it. This droop characteristic serves two crucial purposes:

1. It enables parallel operation of STATCOMs with different power ratings for bus voltage regulation.
2. It prevents the STATCOM from consistently operating at its maximum power rating when regulating bus voltage.

The slight voltage deviation resulting from the droop resistance is a deliberate trade-off that enhances system stability and flexibility in multi-STATCOM configurations.
A current limiter block (Fig.31) is used to make sure that the generated Iqref together with the Id_avg (from STATCOM measurement system block) have a magnitude which is less than or equal to the current rating of the STATCOM.

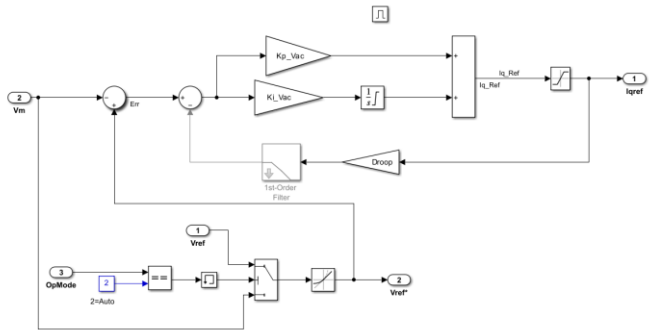

Fig. 32 AC voltage regulator block.

The DC bus voltage calculation block generates the DC bus voltage required to generate a certain AC converter voltage output which results in the desired reactive power compensation. This is achieved using an indirect control strategy. To do this the following equations were used:

$$Vconv = Pnom * (Vd_{p.u} Iq_{p.u}) * \frac{X_{p.u} * \frac{Vnom^2}{Pnom}}{3 * \frac{\sqrt{2}Vnom * Vm}{\sqrt{3}}} + \frac{\sqrt{2}Vnom * Vm}{\sqrt{3}}$$

$$Vdc = \frac{2 * Vconv}{k}$$

where Vconv is the peak phase converter voltage, Pnom is the rated power of the STATCOM (194MVA), Vnom is the rms line to line voltage (500kV), k is the transformer turns ratio, X is the inductive impedance of the RL branch, Vm, Vd, and Iq are the parameters coming from the STATCOM measurement system block discussed earlier. The above formula is derived from equating the 2 equations of reactive power in the dq0 reference frame and abc reference frame.

$$-\frac{3}{2} VdIq = 3E \frac{(E - V)}{X}$$

In the above formula E represents grid voltage while V represents converter voltage (Vconv).

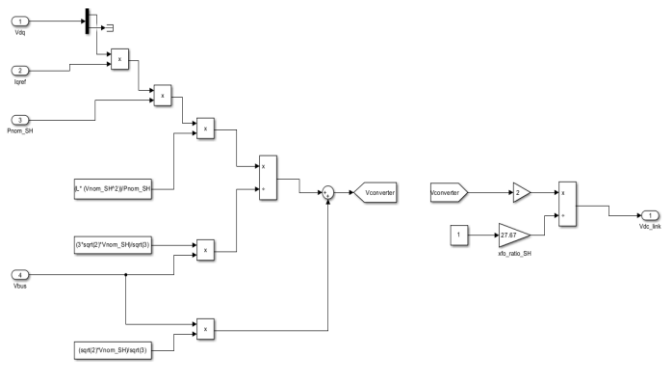

Fig. 33 DC bus voltage calculation block.

The output of the DC bus voltage calculation block goes in as an input to the DC bus voltage regulator block which has a PI controller to regulate Vdc (DC bus voltage). It does this by providing the required Idref (active power current) which charges or discharges the DC bus capacitor depending on whether the measured DC bus voltage is lower or higher than the reference Vdc coming from the DC bus voltage calculation block.

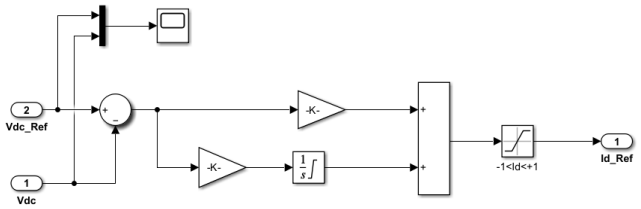

Fig. 34 DC bus voltage regulator block.

The current regulator block implements a closed-loop current control system for an RL branch, modelled in the synchronous reference frame. It receives Idref and Iqref signals from preceding blocks, which serve as reference inputs for two separate current controller blocks. These controllers also receive feedback signals Id and Iq from the STATCOM measurement block, enabling precise current regulation. Additionally, the block takes in Vd and Vq (these Vd and Vq are from STATCOM measurement block) components of the voltage at the Point of Common Coupling (PCC), with Vq set to zero, indicating that the bus space voltage vector is aligned with the d-axis.

The control system employs separate PI controllers for the d-axis and q-axis currents, each processing the difference between the reference and measured values. To enhance dynamic response, feedforward terms are incorporated into the control logic. The outputs of these two current controllers are then combined with their respective feedforward terms to generate the required Vd and Vq components of the converter voltage space vector. This allows for precise and responsive control of both active and reactive power flow through the STATCOM.

The generated Vd and Vq components are first used to calculate the magnitude and phase difference (φ) of the converter voltage relative to the bus voltage. These calculations occur prior to the output voltage computation block. The output voltage computation block then utilizes these pre-calculated magnitude and phase difference values to determine the actual three-phase AC voltage output (Vabc_conv_SH) of the converter.

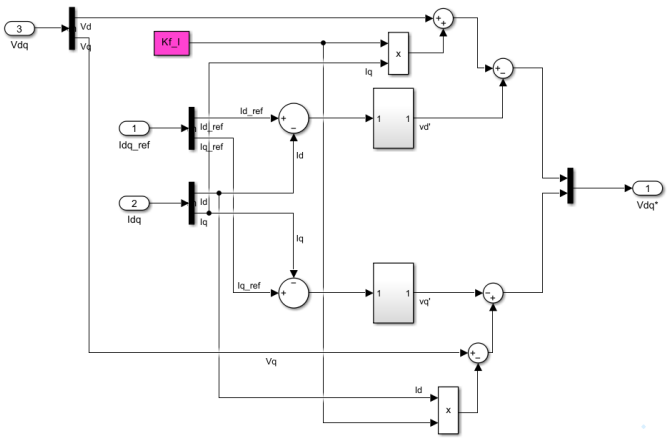

Fig. 35 Current regulator block.

F. Simulation results of power system network with a STATCOM

The power rating of the designed STATCOM is 194MVA. This value was obtained in section I and is equivalent to the amount of reactive power compensation required to bring the bus voltage of bus 4 which has a 500MVA load with a power factor of 0.85 connected to it from a voltage of 0.9697 per unit to 1 per unit.

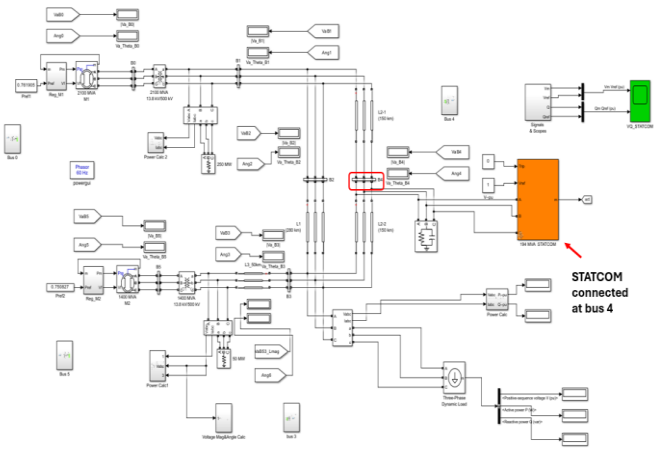

Fig. 36 Power system network with a STATCOM connected at bus 4.

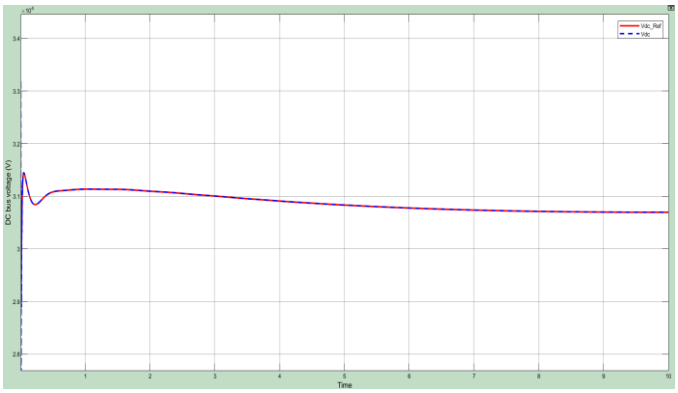

Fig. 37 DC bus voltage regulation.

The above figure shows that the voltage across the capacitor of the DC bus is changing depending on the amount of reactive power demanded to compensate the bus voltage. This shows that the STATCOM control design is indirect control. Also, it can be seen that the DC voltage controller is working well as it is able to track the reference DC bus voltage.

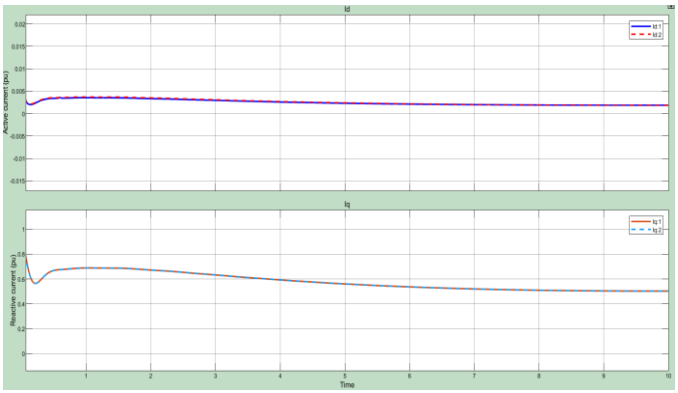

Fig. 38 Active and Reactive current regulation.

The active power current is not zero since we are using indirect control meaning that the active power flowing at the DC side of the converter is responsible for increasing or decreasing the capacitor voltage. Also, some of the active power current is also used to account for the switching losses (negligible since it's a 48-pulse converter). In above figure Id is positive meaning that the STATCOM is absorbing active power from the grid. The reactive power current is positive meaning that the STATCOM

is injecting capacitive reactive power into the grid to boost the bus voltage. This is because our load is an inductive load with a PF of 0.85 and a constant apparent power of 500MVA (constant power load). It can also be seen that both current controllers are able to track their reference current respectively.

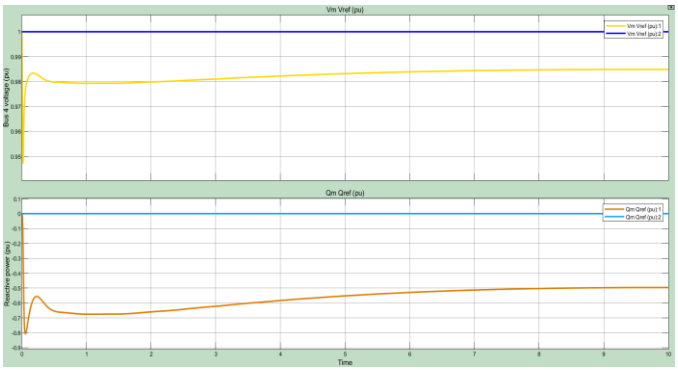

Fig. 39 Bus voltage and Bus Reactive power.

As discussed earlier because of the presence of the droop resistance the bus voltage will be close to the reference voltage but not equal to it. Using a droop resistance of 0.03 per unit the bus voltage was boosted to 0.9849 per unit as compared to 0.9697 per unit when the STATCOM was not connected to the bus. The bus reactive power is negative meaning capacitive reactive power injected into the grid. This also agrees with what was discussed earlier of positive reactive current flowing in the RL branch connecting the STATCOM and bus 4. Also, since we are analysing the STATCOM in voltage regulation mode the reference reactive power is not being tracked and can only be tracked in Var control mode.

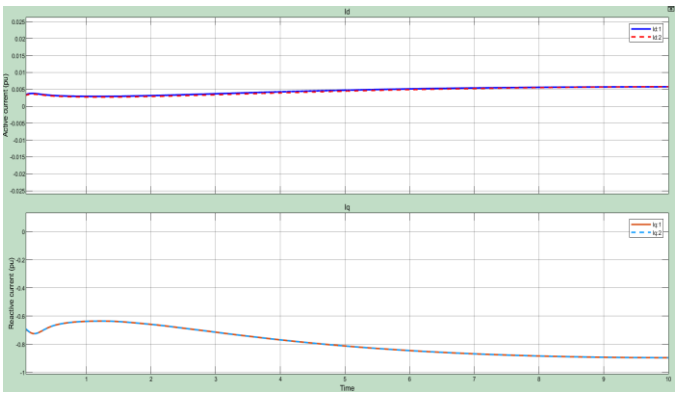

Fig. 40 Capacitive load Reactive current.

A capacitive load with a PF of -0.85 and a constant power rating of 500MVA was connected at bus 4. It can be seen that the reactive current is negative meaning that the converter absorbs reactive power in order to lower the bus voltage, so it stays within the 0.97 per unit to 1.03 per unit bus voltage range.

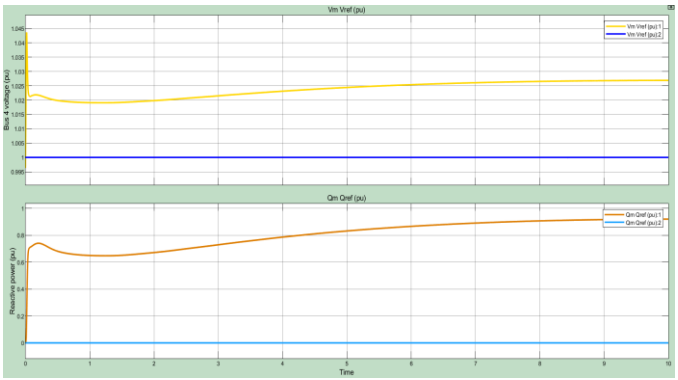

Fig. 41 Bus reactive power for a capacitive load.

In Fig.41 we can see that the reactive power is positive. This means that inductive reactive power is flowing from the bus to the converter.

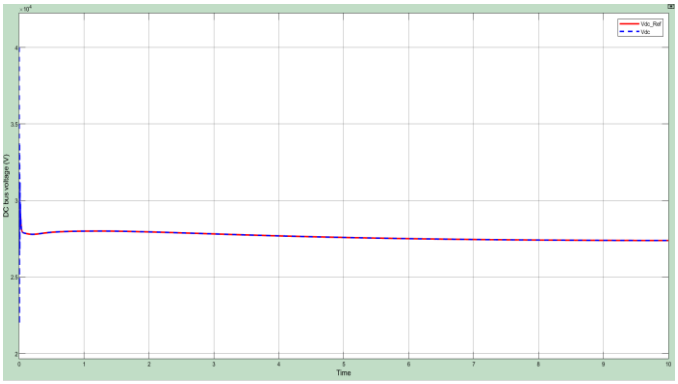

Fig. 42 DC Bus voltage when a capacitive load is connected at the bus.

Comparing the magnitudes of the DC bus voltage for both cases of when an inductive and a capacitive load is connected (Fig.37 & Fig.42) it can be seen that the DC bus voltage values when a capacitor load is connected are smaller than the DC bus voltage values when an inductive load is connected. This is because the converter output voltage must be lower than the bus voltage in the case when there is a capacitive load connected and it must be higher than the bus voltage in the other case when there is an inductive load connected.

Conclusion

This study yielded several significant findings across its three sections, providing valuable insights into power system voltage regulation and STATCOM control strategies. The power system analysis identified Bus 4 as the weakest in terms of voltage regulation, emphasizing the need for targeted reactive power compensation to maintain overall grid stability within the desired 0.97-1.03 p.u. range. In the 48-pulse converter control section, closed-loop control demonstrated superior performance over open-loop control, exhibiting better reference signal tracking, reduced steady-state errors, and improved disturbance rejection. The study also achieved effective decoupled control of active and reactive power, with Id regulating active power and Iq regulating reactive power independently. The direct control method proved effective, involving two key aspects: adjusting the zero voltage vector to control output voltage magnitude, and changing the sine reference signal phase angle to adjust IGBT firing angles, thereby controlling the phase angle of the converter's output voltage. The STATCOM implementation successfully regulated Bus 4 voltage within the desired range

using indirect control methods, which involved adjusting the DC bus voltage to manage reactive power output. The average phasor model of the STATCOM simplified control design by eliminating the need for a PLL controller and simplifying abc-dq0 transformations. Overall, the study demonstrated the effectiveness of both direct and indirect control methods for power regulation in grid-connected converters, the efficacy of STATCOM devices in addressing localized voltage regulation issues, and the impact of simulation approach on computational efficiency and model complexity, with phasor models offering a good balance between accuracy and simulation speed.

References:

[1] N. G. Hingorani and L. Gyugyi, Understanding FACTS: Concepts and Technology of Flexible AC Transmission Systems. New York, NY, USA: IEEE Press, 1999.

[2] X. P. Zhang, C. Rehtanz, and B. Pal, Flexible AC Transmission Systems: Modelling and Control. Berlin, Germany: Springer, 2012.

[3] S. Meier, M. Allmeling, and K. Mauch, “Overview of FACTS devices for wind power plants directly connected to the transmission network,” in Proc. Nordic Wind Power Conf., Roskilde, Denmark, 2007.

[4] K. K. Sen, "STATCOM-STATic synchronous COMpensator: theory, modeling, and applications," *IEEE Power Engineering Society. 1999 Winter Meeting (Cat. No.99CH36233)*, New York, NY, USA, 1999, pp. 1177-1183 vol.2, doi: 10.1109/PESW.1999.747375.