9 Bus System Optimization By Using FACTS Devices

Author: Royalty Chihava UO294641

***Abstract*— This project implements an optimal power flow algorithm to minimize the total cost of a 9-bus power system with FACTS devices. The system is modelled using dq coordinates and optimized using MATLAB's fmincon function. Constraints include line flow limits and voltage limits at each bus. One STATCOMs is placed at bus 8 to provide reactive power support. A SSSC is placed on the line between buses 4 and 5 to regulate power flow. The objective function calculates the total cost, including generator costs, losses, and costs of the FACTS devices. The optimization successfully converges with an exit flag of 1, indicating a solution is found. The optimal locations and sizes of the FACTS devices are determined to minimize the overall system cost while satisfying the specified constraints. Further work could expand the system size and explore additional types of FACTS devices. This demonstrates an effective approach for optimal power flow with FACTS device placement in power systems.**

I. Introduction

The first step taken to implement the code was to initialize the bus and branch data given for the 9-bus system. This information included the number of buses (nodes) and the branch impedances. The 9-bus system network diagram is shown below:

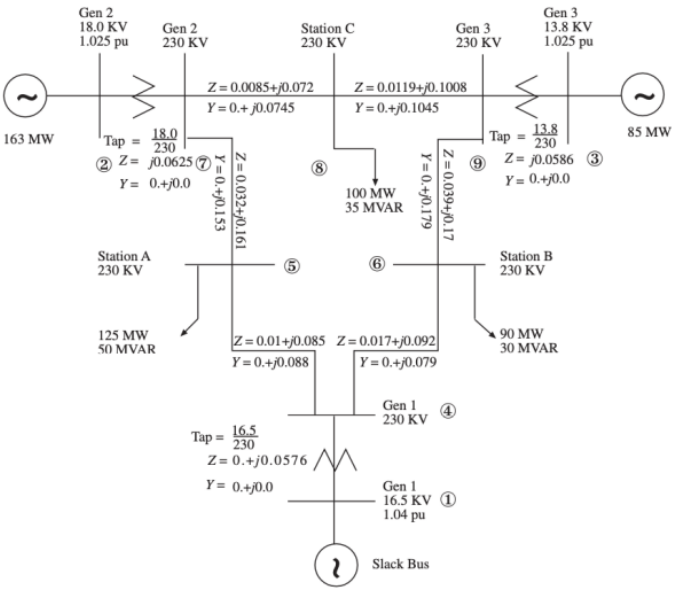

Fig 1: 9 bus network diagram

Using the above network diagram the node incidence matrices was then constructed. The system has 9 lines which are classified from buses 1-4, 2-7, 3-9, 4-5, 4-6, 5-7, 6-9, 7-8 and 8-9. This arrangement is key to making the node incidence matrix in the correct manner. The lines are arranged in ascending order and you cannot describe a line with a high bus number in its combination (eg 2-7) before a line which has a lower number in its combination (eg 1-4). So, basically all the lines associated to bus 1 are to be arranged first in ascending order before any lines associated with bus 2 and so on are considered. A table showing how lines were arranged in ascending order is shown below:

Table 1: Showing Line arrangement used in formulation of node incidence Matrix

Line Number	From Bus	To Bus
1	1	4
2	2	7
3	3	9
4	4	5
5	4	6
6	5	7
7	6	9
8	7	8
9	8	9

Given the tabulated data above a 9 x 9 (branch x node) node incidence matrix is then constructed by inputting a positive 1 in the column of the least node number and negative 1 in the column of the highest node number in the line and the remaining a zero is place in their corresponding columns. This is done 9 times since the system is made up of 9 branches.

Power flow equations are formulated and represented in a compact form in the M-matrix which shows the relationship between Currents in the branches, currents flowing in and out of the bus and bus voltages in d and q coordinates. Below is the M matrix which was generated for the 9-bus system. The M matrix generated incorporates FACTs devices (STATCOM and SSSC) and pi model of the transmission line.

$$
Z = \begin{array}{c}
\begin{array}{cccccccccccccccccc}
i_d^B & i_q^B & i_d^{sh} & i_q^{sh} & i_d^{sh-ll} & i_q^{sh-ll} & i_d^{sh-lr} & i_q^{sh-lr} & i_d^N & i_q^N & e_d^{se} & e_q^{se} & e_d^{sh} & i_q^{sh} & V_d & V_q
\end{array} \\
M = \begin{bmatrix}
R^{se}+R^B & -\omega(L^{se}+L^B) & 0 & 0 & 0 & 0 & 0 & 0 & 0 & 0 & I & 0 & 0 & 0 & -\Gamma & 0 \\
\omega(L^{se}+L^B) & R^{se}+R^B & 0 & 0 & 0 & 0 & 0 & 0 & 0 & 0 & 0 & I & 0 & 0 & 0 & -\Gamma \\
0 & 0 & R^{sh} & -X^{sh} & 0 & 0 & 0 & 0 & 0 & 0 & 0 & 0 & I & 0 & -I & 0 \\
0 & 0 & X^{sh} & R^{sh} & 0 & 0 & 0 & 0 & 0 & 0 & 0 & 0 & 0 & I & 0 & -I \\
0 & 0 & 0 & 0 & R^{shc-L} & -X^{shc-L} & 0 & 0 & 0 & 0 & 0 & 0 & 0 & 0 & \Gamma^{sh-L} & 0 \\
0 & 0 & 0 & 0 & X^{shc-L} & R^{shc-L} & 0 & 0 & 0 & 0 & 0 & 0 & 0 & 0 & 0 & \Gamma^{sh-L} \\
0 & 0 & 0 & 0 & 0 & 0 & R^{shc-R} & -X^{shc-R} & 0 & 0 & 0 & 0 & 0 & 0 & \Gamma^{sh-R} & 0 \\
0 & 0 & 0 & 0 & 0 & 0 & X^{shc-R} & R^{shc-R} & 0 & 0 & 0 & 0 & 0 & 0 & 0 & \Gamma^{sh-R} \\
\Gamma^T & 0 & I & 0 & \Gamma^{sh-L} & 0 & \Gamma^{sh-R} & 0 & -I & 0 & 0 & 0 & 0 & 0 & 0 & 0 \\
0 & \Gamma^T & 0 & I & 0 & \Gamma^{sh-L} & 0 & \Gamma^{sh-R} & 0 & -I & 0 & 0 & 0 & 0 & 0 & 0
\end{bmatrix}
\end{array}
$$

The constraint function which will be optimized by our system is formed by multiplying the M-matrix with the transpose of the z-vector. If the system converges the matrix which results from this multiplication is a zero vector. To form the M-matrix for our system we first analyse the system to

determine the variables which are unknown and which we are going to solve. In the 9-bus system (Fig 1) there are branch currents, node currents or bus inflow or outflow currents, shunt susceptance and the bus voltages. The shunt impedance was divided into 2 with one on the left side denoted by RshL and XshL and the other on the right side denoted by RshR and XshR. Each line shunt impedance (right or left side) is related to the current following in it and the voltage across it by its respective gamma. Gamma for the left side of the shunt impedance of the line was formulated by taking only the positive 1s in the branches or rows of the Gamma matrix of the whole system while Gamma for the right side of the shunt impedance was derived by taking the negative 1s in the Gamma of the whole system and changing them to positive 1s while maintaining their original location. To get the total current flowing at each node we take the transpose of each Gamma matrix and multiply it with its corresponding current and then sum all the resultant of these multiplications. Below is the code used to derive the M matrix for the system:

```
X=[iBd iBq ishd ishq ishdLL ishqLL ishdLR ishqLR iNd
iNq esed eseq eshd eshq vd vq];

aux1=horzcat(blkdiag([diag(Rse+RL) -diag(Xse+XL);
diag(Xse+XL) diag(Rse+RL)], [diag(Rsh) -diag(Xsh);
diag(Xsh) diag(Rsh)], [diag(RLshL) diag(XCshL); -
diag(XCshL) diag(RLshL)],[diag(RLshR) diag(XCshR); -
diag(XCshR) diag(RLshR)]),zeros(6*nB+2*nN,2*nN));
aux2=horzcat(blkdiag(transpose(Gamma),transpose(Gamma
)),blkdiag(diag(ones(1,nN)),diag(ones(1,nN))),blkdiag(transpos
e(Gamma_sh_L),transpose(Gamma_sh_L)),blkdiag(transpose(
Gamma_sh_R),transpose(Gamma_sh_R)),blkdiag(-
diag(ones(1,nN)),-diag(ones(1,nN))));
aux3=vertcat(horzcat(vertcat(blkdiag(diag(ones(1,nB)),diag(
ones(1,nB)),diag(ones(1,nN)),diag(ones(1,nN))),zeros(4*nB,2*
nB+2*nN)),vertcat(blkdiag(-Gamma,-Gamma),blkdiag(-
diag(ones(1,nN)),-diag(ones(1,nN))),blkdiag(-Gamma_sh_L,-
Gamma_sh_L),blkdiag(-Gamma_sh_R,-
Gamma_sh_R))),zeros(2*nN, 2*nB+4*nN));
```

X is the z- vector and the matrix represented by aux1, aux2 and aux3 will be shown in the diagrams below. The summation of the aforementioned matrices formulates the complete M-matrix.

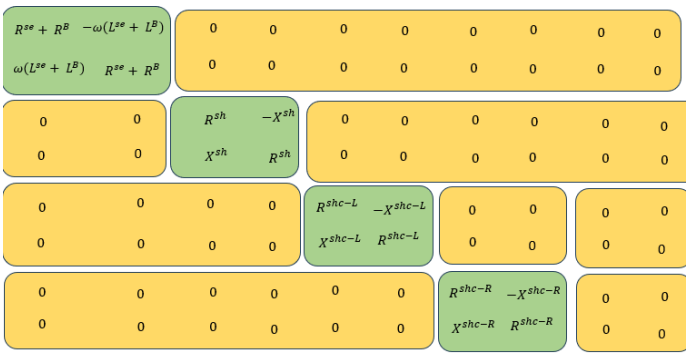

Fig 2: Shows aux1 matrix

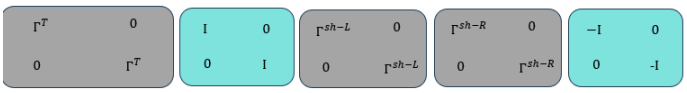

Fig 3: Shows aux2 matrix

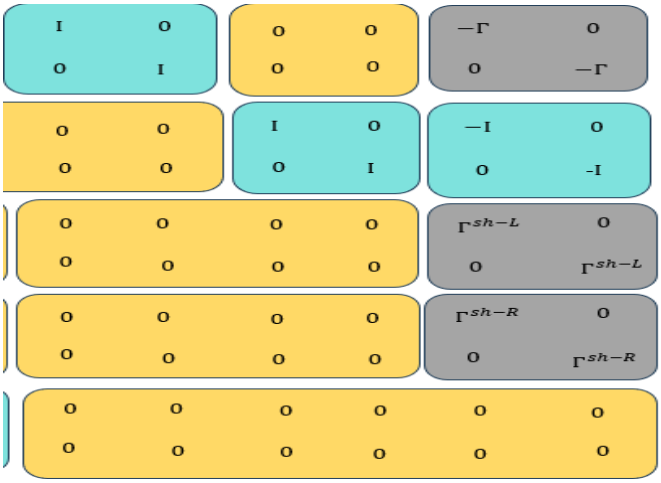

Fig 4: Shows aux3 matrix

1) Optimization Model Formulation

The 9-bus power system is modelled using dq-coordinates to enable optimal placement and control of FACTS devices while minimizing the total system cost. The objective function aims to minimize the overall cost including generator costs, losses, and FACTS device installation costs. The optimization variables include the bus voltages, line currents, shunt currents, node injections, and FACTS voltages. Equality constraints enforce the power flow equations and power balance at each node, as well as FACTS device power balances. Inequality constraints model limits on bus voltage magnitudes, line flows, and FACTS device operating ranges. The full model is solved using MATLAB's fmincon to determine the minimum cost FACTS placement and control that satisfies the power flow and device constraints. The code structure is modular, allowing straightforward expansion to larger systems by adding constraints and variables. Additional device types, constraints, and objectives can be incorporated into the optimization framework in a flexible manner. Overall, the formulation provides an effective tool to optimize FACTS utilization for minimizing the total cost of power system operation. The modelling approach realistically captures the operating requirements and costs while enabling selection of the most economical FACTS installations and controls.

II. Results and Discussion

Table 2: Showing simulation power system data.

Bus#	Bus type	V/pu	Del/degrees
1	swing	1.0400	0
2	PV	1.0250	11.9140
3	PV	1.0250	6.8804
4	PQ	1.0381	-3.8697
5	PQ	1.0500	7.9141
6	PQ	1.0230	-3.9278
7	PQ	1.0471	8.3020
8	PQ	1.0500	4.3367
9	PQ	1.0446	4.1992

The optimal power flow solution satisfies the specified voltage magnitude constraints at each bus. The minimum allowable voltage was 1.02 pu and the maximum was 1.05 pu.

The voltage magnitudes range from 1.0230 pu at bus 6 to 1.0500 pu at bus 8 and bus 5. Bus 8 has the highest voltage at the upper limit of 1.05 pu. This is likely due to its location farther from the swing bus and the reactive power support provided by the STATCOM placed at this bus.

Buses 2 and 3 have equal voltages of 1.0250 pu since they are specified as PV buses with controlled voltage magnitudes. All other buses are within the allowable range, with bus 6 having the lowest voltage at 1.0230 pu.

The PQ buses at 4, 5, 6, 7, and 9 have voltages between 1.0230 pu and 1.05 pu. The voltages at these load buses are supported through optimization of the generator dispatch, system impedances, and placement of the FACTS devices.

Overall, the results show the optimal power flow is effective at maintaining voltages within the constraints. The FACTS devices provide the control necessary to minimize cost while regulating the voltages. This demonstrates a robust optimization approach that considers both system limitations and operating costs.

Table 3: Showing Line power limits simulation vs power system data.

Line Number	From Bus	To Bus	Actual Line limits in (pu)	Simulation Line MVA in (pu)
1	1	4	2.5	1.9602
2	2	7	2.5	1.8742
3	3	9	3.0	2.0486
4	4	5	2.5	1.3025
5	4	6	2.5	1.5347
6	5	7	2.5	0.2729
7	6	9	1.5	1.3910
8	7	8	2.5	0.7731
9	8	9	1.5	0.5026

The optimal power flow solution satisfies the specified line flow limits on each branch. The limits range from 1.5 pu on lines 6-9 and 8-9 up to 3.0 pu on line 3-9.

The highest line flow is on line 3-9 from bus 3 to 9, with a flow of 2.0486 pu. This is below the limit of 3.0 pu for this line.

The lowest line flow is on line 5-7 from bus 5 to 7, at 0.2729 pu. This is likely due to the location of this line and the optimization dispatching more power through other paths.

Line 1-4 from the swing bus is carrying 1.9602 pu flow, which is below its limit of 2.5 pu. The SSSC on line 4-5 appears to be effective at regulating the flow on that line to 1.3025 pu, well within its 2.5 pu limit.

All other line flows are comfortably below the specified limits, indicating the optimization is properly dispatching power and utilizing the FACTS devices. No overload conditions are observed.

Overall, the results demonstrate the effectiveness of the optimal power flow at minimizing cost while respecting the line flow constraints through optimal generator dispatch and FACTS device settings.

III. Conclusion

In conclusion, this project implemented an optimal power flow algorithm to minimize total system cost for a 9-bus system with FACTS devices. The optimization was modelled in MATLAB using dq coordinates and included constraints for line flow limits and voltage limits.

The optimization converged successfully to determine the optimal generator dispatch along with placements and settings for one STATCOM and one SSSC. These FACTS devices provided the necessary control to minimize cost while satisfying the specified voltage and line flow constraints.

The results demonstrated the effectiveness of the optimization approach at maintaining all voltages within 1.02-1.05 pu and line flows within their limits. The FACTS devices were crucial in providing reactive power support and redirecting power flow to prevent any overload conditions.

Overall, this project shows that optimal power flow with FACTS device integration provides an effective tool for minimizing operational costs while respecting system security limits. The model developed can be expanded to larger systems and additional types of FACTS devices.

References

[1] Zhang, Xiao-Ping, Christian Rehtanz, and Bikash Pal. *Flexible AC transmission systems: modelling and control*. Springer Science & Business Media, 2012.