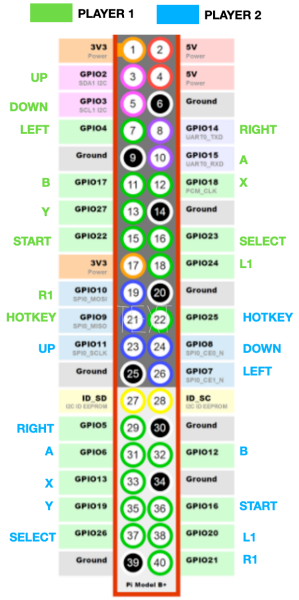

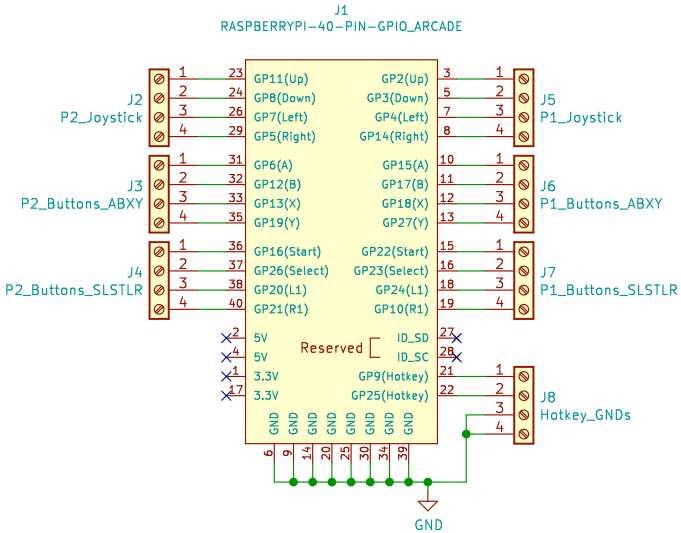

Sheet: /
File: rpi-arcade-hat.sch

Title: RPi Recalbox Arcade Control Interface

Size: A4	Date: 2021-09-26	Rev: 1.0
KiCad E.D.A. kicad (5.1.9-0-10_14)		Id: 1/1