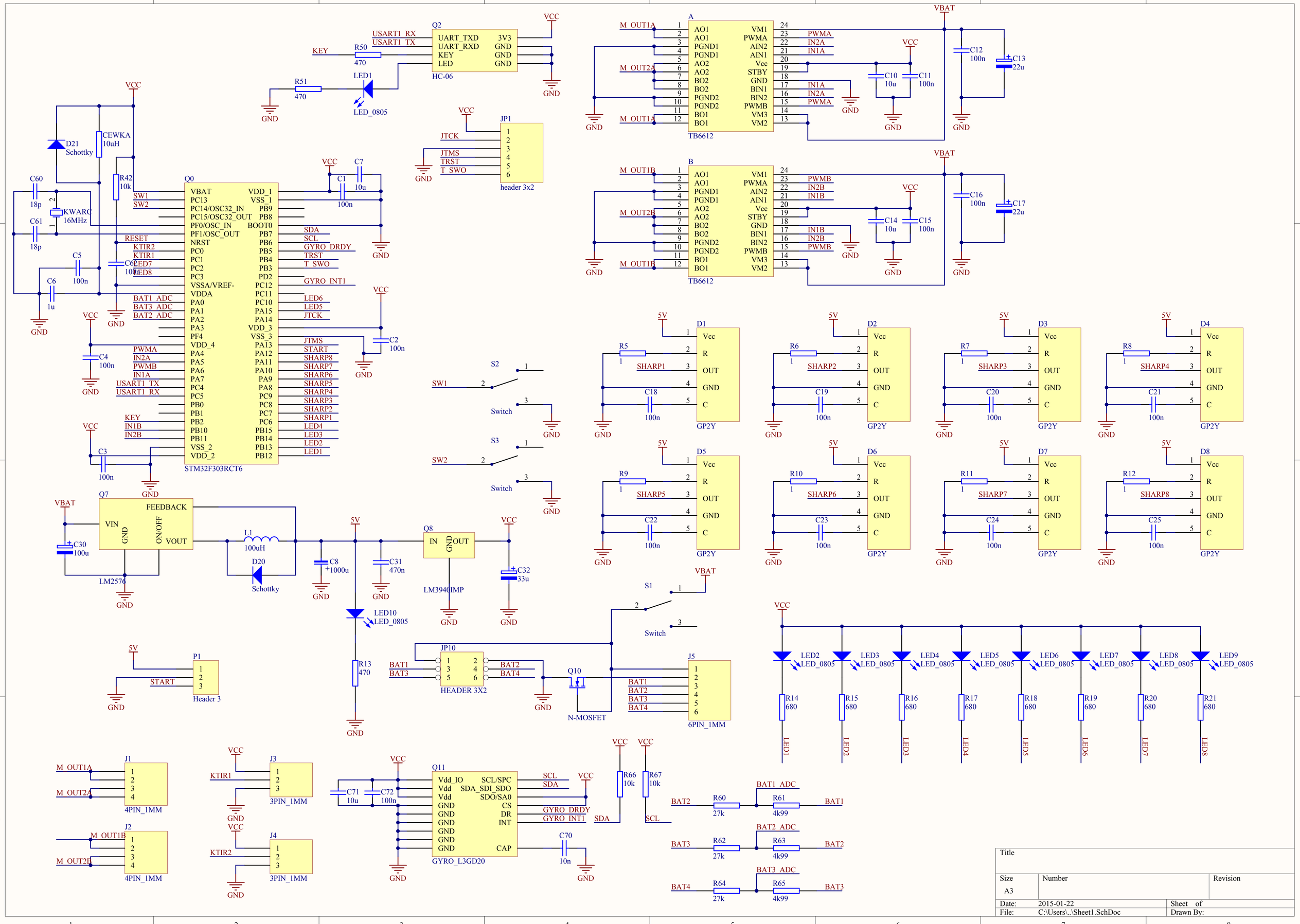
Q2
HC-06
UART_TXD
UART_RXD
KEY
LED
3V3
GND
USART1_RX
USART1_TX
R50
470
R51
470
LED1
LED_0805
VCC
GND
JP1
header 3x2
JTCK
JTMS
TRST
T_SWO
Q0
STM32F303RCT6
VBAT
PC13
PC14/OSC32_IN
PC15/OSC32_OUT
PF0/OSC_IN
PF1/OSC_OUT
NRST
PC0
PC1
PC2
PC3
VSSA/VREF-
VDDA
PA0
PA1
PA2
PA3
PF4
VDD_4
PA4
PA5
PA6
PA7
PC4
PC5
PB0
PB1
PB2
PB10
PB11
VSS_2
VDD_2
VDD_1
VSS_1
PB9
PB8
BOOT0
PB7
PB6
PB5
PB4
PB3
PD2
PC12
PC11
PC10
PA15
PA14
VDD_3
VSS_3
PA13
PA12
PA11
PA10
PA9
PA8
PC9
PC8
PC7
PC6
PB15
PB14
PB13
PB12
SW1
SW2
RESET
KTIR2
KTIR1
LED7
LED8
BAT1_ADC
BAT3_ADC
BAT2_ADC
PWMA
IN2A
PWMB
IN1A
USART1_TX
USART1_RX
KEY
IN1B
IN2B
SDA
SCL
GYRO_DRDY
TRST
T_SWO
GYRO_INT1
LED6
LED5
JTCK
JTMS
START
SHARP8
SHARP7
SHARP6
SHARP5
SHARP4
SHARP3
SHARP2
SHARP1
LED4
LED3
LED2
LED1
D21
Schottky
CEWKA
10uH
R42
10k
KWARC
16MHz
C60
18p
C61
18p
C5
100n
C6
1u
C7
C1
10u
100n
C2
100n
C3
100n
C4
100n
C62
100n
Q7
LM2576
FEEDBACK
VIN
GND
ON/OFF
VOUT
C30
100u
L1
100uH
D20
Schottky
C8
1000u
C31
470n
Q8
LM3940IMP
IN
OUT
C32
33u
LED10
LED_0805
R13
470
S1
S2
S3
Switch
P1
Header 3
JP10
HEADER 3X2
BAT1
BAT3
BAT2
BAT4
Q10
N-MOSFET
J5
6PIN_1MM
A
TB6612
AO1
PGND1
AO2
BO2
PGND2
BO1
VM1
PWMA
AIN2
AIN1
Vcc
STBY
BIN1
BIN2
PWMB
VM3
VM2
M_OUT1A
M_OUT2A
M_OUT1A
IN1A
IN2A
C10
10u
C11
100n
C12
100n
C13
22u
B
M_OUT1B
M_OUT2B
M_OUT1B
IN1B
IN2B
C14
10u
C15
100n
C16
100n
C17
22u
D1
D2
D3
D4
D5
D6
D7
D8
GP2Y
Vcc
R
OUT
GND
C
R5
R6
R7
R8
R9
R10
R11
R12
C18
C19
C20
C21
C22
C23
C24
C25
5V
LED2
LED3
LED4
LED5
LED6
LED7
LED8
LED9
R14
680
R15
680
R16
680
R17
680
R18
680
R19
680
R20
680
R21
680
J1
4PIN_1MM
J2
4PIN_1MM
J3
3PIN_1MM
J4
3PIN_1MM
KTIR1
KTIR2
Q11
GYRO_L3GD20
Vdd_IO
Vdd
SCL/SPC
SDA_SDI_SDO
SDO/SA0
CS
DR
INT
CAP
C71
10u
C72
100n
C70
10n
R66
10k
R67
10k
R60
27k
R61
4k99
R62
27k
R63
4k99
R64
27k
R65
4k99
BAT1_ADC
BAT2_ADC
BAT3_ADC
Title
Size
A3
Number
Revision
Date:
2015-01-22
Sheet of
File:
C:\Users\..\Sheet1.SchDoc
Drawn By:

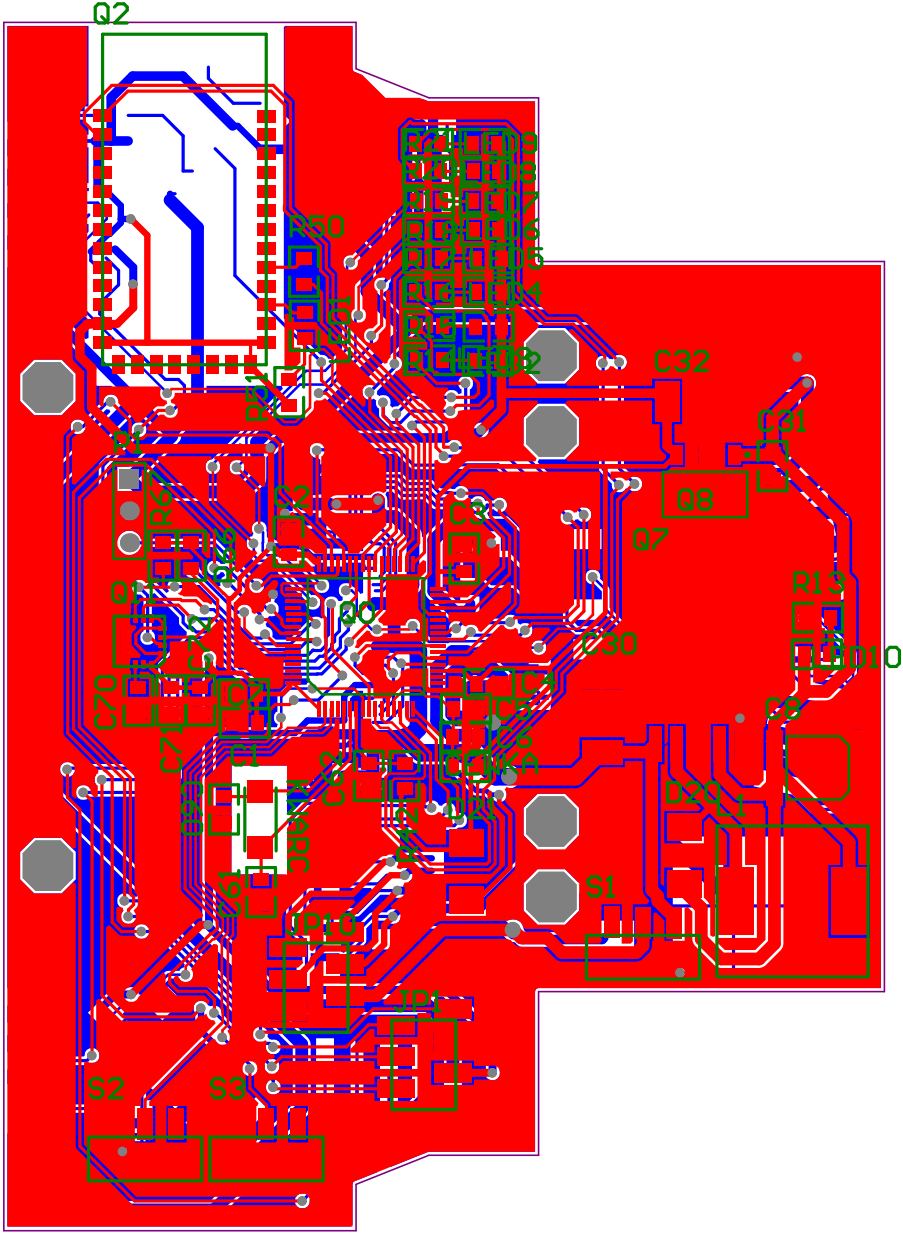
Q2
C32
C31
Q8
Q7
R13
D10
C30
C3
D20
S1
IP10
IP1
S2
S3
C70
C71
C6
C4
C5
C2
C1
R6
R2
R3
R4
R5
R7
R8
R9
R10
R11
R12
R14
R15
R16
R17
R18
R19
R20
R21
R22
R23
R24
R25
R26
R27
R28
R29
R30
R31
R32
R33
R34
R35
R36
R37
R38
R39
R40
R41
R42
R43
R44
R45
R46
R47
R48
R49
R50
R51
R52
R53
R54
R55
R56
R57
R58
R59
R60
R61
R62
R63
R64
R65
R66
R67
R68
R69
R70
R71
R72
R73
R74
R75
R76
R77
R78
R79
R80
R81
R82
R83
R84
R85
R86
R87
R88
R89
R90
R91
R92
R93
R94
R95
R96
R97
R98
R99
R100
R101
R102
R103
R104
R105
R106
R107
R108
R109
R110
R111
R112
R113
R114
R115
R116
R117
R118
R119
R120
R121
R122
R123
R124
R125
R126
R127
R128
R129
R130
R131
R132
R133
R134
R135
R136
R137
R138
R139
R140
R141
R142
R143
R144
R145
R146
R147
R148
R149
R150
R151
R152
R153
R154
R155
R156
R157
R158
R159
R160
R161
R162
R163
R164
R165
R166
R167
R168
R169
R170
R171
R172
R173
R174
R175
R176
R177
R178
R179
R180
R181
R182
R183
R184
R185
R186
R187
R188
R189
R190
R191
R192
R193
R194
R195
R196
R197
R198
R199
R200
R201
R202
R203
R204
R205
R206
R207
R208
R209
R210
R211
R212
R213
R214
R215
R216
R217
R218
R219
R220
R221
R222
R223
R224
R225
R226
R227
R228
R229
R230
R231
R232
R233
R234
R235
R236
R237
R238
R239
R240
R241
R242
R243
R244
R245
R246
R247
R248
R249
R250
R251
R252
R253
R254
R255
R256
R257
R258
R259
R260
R261
R262
R263
R264
R265
R266
R267
R268
R269
R270
R271
R272
R273
R274
R275
R276
R277
R278
R279
R280
R281
R282
R283
R284
R285
R286
R287
R288
R289
R290
R291
R292
R293
R294
R295
R296
R297
R298
R299
R300
R301
R302
R303
R304
R305
R306
R307
R308
R309
R310
R311
R312
R313
R314
R315
R316
R317
R318
R319
R320
R321
R322
R323
R324
R325
R326
R327
R328
R329
R330
R331
R332
R333
R334
R335
R336
R337
R338
R339
R340
R341
R342
R343
R344
R345
R346
R347
R348
R349
R350
R351
R352
R353
R354
R355
R356
R357
R358
R359
R360
R361
R362
R363
R364
R365
R366
R367
R368
R369
R370
R371
R372
R373
R374
R375
R376
R377
R378
R379
R380
R381
R382
R383
R384
R385
R386
R387
R388
R389
R390
R391
R392
R393
R394
R395
R396
R397
R398
R399
R400
R401
R402
R403
R404
R405
R406
R407
R408
R409
R410
R411
R412
R413
R414
R415
R416
R417
R418
R419
R420
R421
R422
R423
R424
R425
R426
R427
R428
R429
R430
R431
R432
R433
R434
R435
R436
R437
R438
R439
R440
R441
R442
R443
R444
R445
R446
R447
R448
R449
R450
R451
R452
R453
R454
R455
R456
R457
R458
R459
R460
R461
R462
R463
R464
R465
R466
R467
R468
R469
R470
R471
R472
R473
R474
R475
R476
R477
R478
R479
R480
R481
R482
R483
R484
R485
R486
R487
R488
R489
R490
R491
R492
R493
R494
R495
R496
R497
R498
R499
R500
R501
R502
R503
R504
R505
R506
R507
R508
R509
R510
R511
R512
R513
R514
R515
R516
R517
R518
R519
R520
R521
R522
R523
R524
R525
R526
R527
R528
R529
R530
R531
R532
R533
R534
R535
R536
R537
R538
R539
R540
R541
R542
R543
R544
R545
R546
R547
R548
R549
R550
R551
R552
R553
R554
R555
R556
R557
R558
R559
R560
R561
R562
R563
R564
R565
R566
R567
R568
R569
R570
R571
R572
R573
R574
R575
R576
R577
R578
R579
R580
R581
R582
R583
R584
R585
R586
R587
R588
R589
R590
R591
R592
R593
R594
R595
R596
R597
R598
R599
R600
R601
R602
R603
R604
R605
R606
R607
R608
R609
R610
R611
R612
R613
R614
R615
R616
R617
R618
R619
R620
R621
R622
R623
R624
R625
R626
R627
R628
R629
R630
R631
R632
R633
R634
R635
R636
R637
R638
R639
R640
R641
R642
R643
R644
R645
R646
R647
R648
R649
R650
R651
R652
R653
R654
R655
R656
R657
R658
R659
R660
R661
R662
R663
R664
R665
R666
R667
R668
R669
R670
R671
R672
R673
R674
R675
R676
R677
R678
R679
R680
R681
R682
R683
R684
R685
R686
R687
R688
R689
R690
R691
R692
R693
R694
R695
R696
R697
R698
R699
R700
R701
R702
R703
R704
R705
R706
R707
R708
R709
R710
R711
R712
R713
R714
R715
R716
R717
R718
R719
R720
R721
R722
R723
R724
R725
R726
R727
R728
R729
R730
R731
R732
R733
R734
R735
R736
R737
R738
R739
R740
R741
R742
R743
R744
R745
R746
R747
R748
R749
R750
R751
R752
R753
R754
R755
R756
R757
R758
R759
R760
R761
R762
R763
R764
R765
R766
R767
R768
R769
R770
R771
R772
R773
R774
R775
R776
R777
R778
R779
R780
R781
R782
R783
R784
R785
R786
R787
R788
R789
R790
R791
R792
R793
R794
R795
R796
R797
R798
R799
R800
R801
R802
R803
R804
R805
R806
R807
R808
R809
R810
R811
R812
R813
R814
R815
R816
R817
R818
R819
R820
R821
R822
R823
R824
R825
R826
R827
R828
R829
R830
R831
R832
R833
R834
R835
R836
R837
R838
R839
R840
R841
R842
R843
R844
R845
R846
R847
R848
R849
R850
R851
R852
R853
R854
R855
R856
R857
R858
R859
R860
R861
R862
R863
R864
R865
R866
R867
R868
R869
R870
R871
R872
R873
R874
R875
R876
R877
R878
R879
R880
R881
R882
R883
R884
R885
R886
R887
R888
R889
R890
R891
R892
R893
R894
R895
R896
R897
R898
R899
R900
R901
R902
R903
R904
R905
R906
R907
R908
R909
R910
R911
R912
R913
R914
R915
R916
R917
R918
R919
R920
R921
R922
R923
R924
R925
R926
R927
R928
R929
R930
R931
R932
R933
R934
R935
R936
R937
R938
R939
R940
R941
R942
R943
R944
R945
R946
R947
R948
R949
R950
R951
R952
R953
R954
R955
R956
R957
R958
R959
R960
R961
R962
R963
R964
R965
R966
R967
R968
R969
R970
R971
R972
R973
R974
R975
R976
R977
R978
R979
R980
R981
R982
R983
R984
R985
R986
R987
R988
R989
R990
R991
R992
R993
R994
R995
R996
R997
R998
R999
R1000