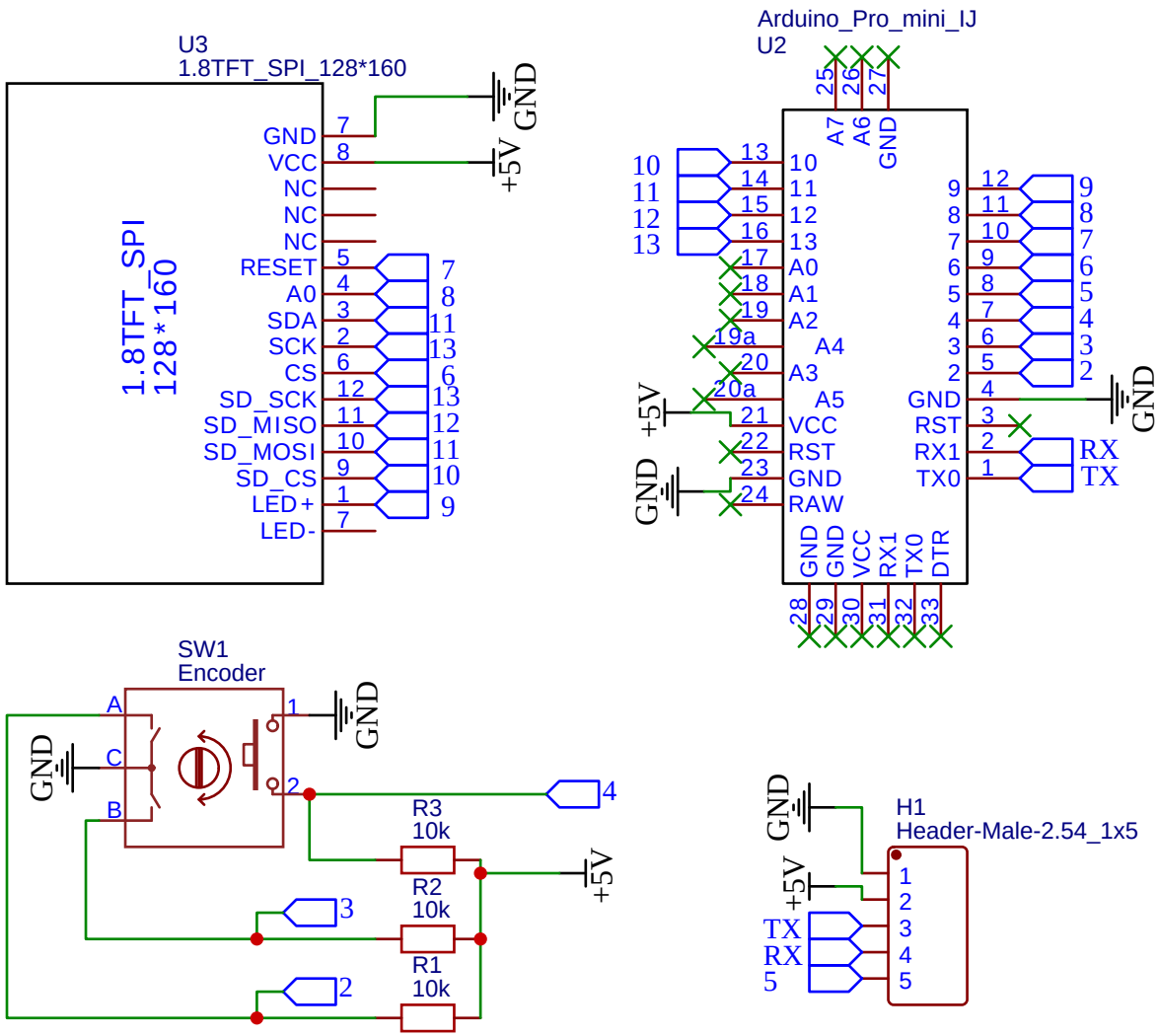

TITLE: GRBL Companion		REV: 1.0
EasyEDA	Company: Rozenrod	Sheet: 1/1
	Date: 2019-09-20 Drawn By: Rozenrod	