How to use Auto Placer in Software Configurable Breadboard

Summary: This Proof of Skills assignment walks the reader through the best practices for using the Auto Placer function in the SCB User Interface. As the name implies the SCB is configured or programed as it were from a net list file which can be thought of as the “program” to be run.

Step1:

Open the simple-example-autoplace.asc schematic in LTspice. Or enter it as an new schematic from the picture below.

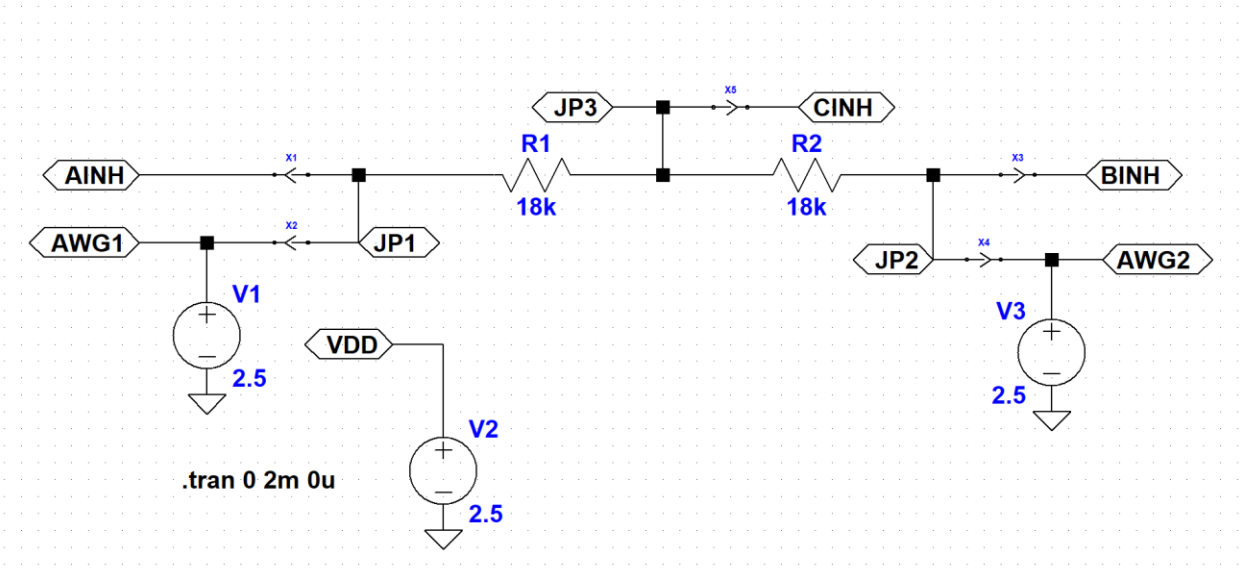

This simple example consists of two resistors connected in series. As can be seen in this example the circuit has just three nodes, the two ends of the series resistors (with net labels JP1 and JP2) and the middle node (with net label JP3). In the schematic we also join or connect 5 special nodes that represent the SCB waveform generator outputs (AWG1, AWG2) and scope inputs (AINH, BINH, CINH) to the circuit nodes. This is done by placing cross_point symbols between these nodes and one of the JP nodes. You can’t add two different net labels to the same node in LTspice. Note that the pointed side of the cross_point symbol points away from the JP nodes. Also note that there is no placement information with regard to R1 and R2 in the form of additional cross_point symbols in the schematic at this point.

To program the SCB hardware we need to save the Spice net list to a .cir file by clicking on the View drop down menu and selecting the Update and View SPICE netlist.

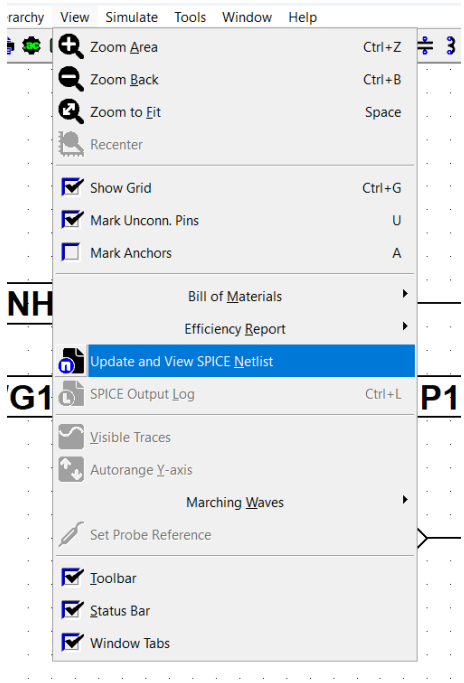

A text window will open showing the net list file to be saved.

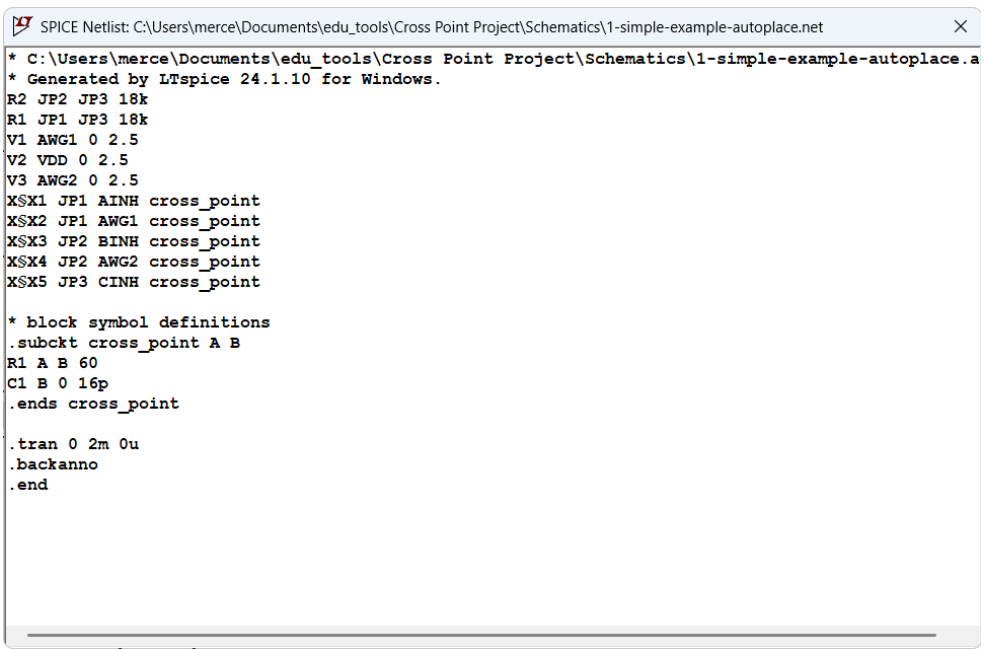

Right click in the text window and this dialog box will appear. Click on Edit as Independent Netlist to save file to disk.

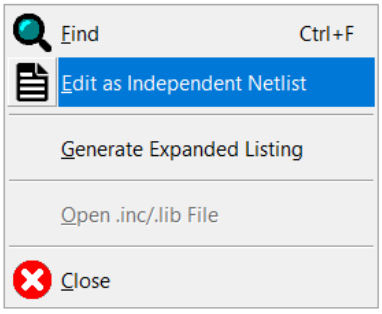

Step 2:

You now have a net list file to use to configure the SCB using the Auto Placer.

With the SCB connected to the computer over USB, Launch the Alice-universal-alpha.pyw python program. At this point the main Oscilloscope window and the AWG controls window can be minimized while configuring the SCB.

Click on the Open Text UI by clicking on the button on the right hand side of the Cross Point Interface window.

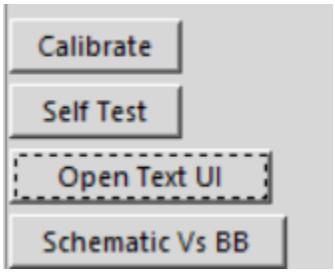

This will open the empty blank text editor / message display window.

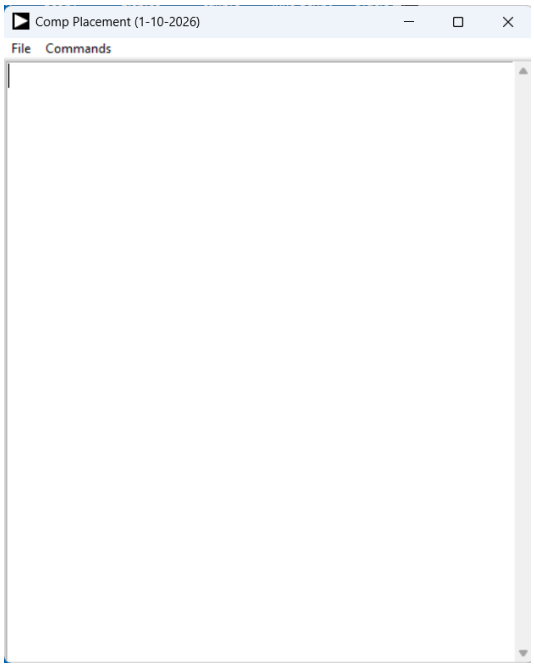

Click on the Commands dropdown menu and select the Auto Placer command.

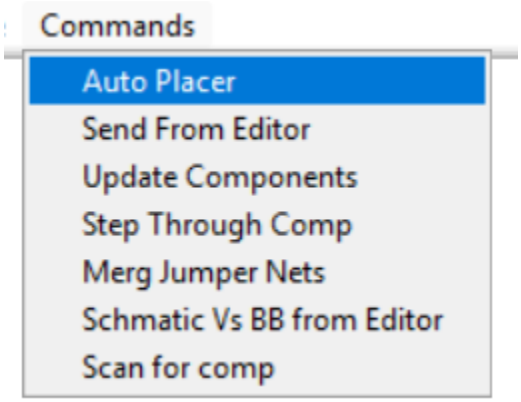

A file selector will open because you have not yet entered a file name.

Select and open the simple-example-autoplace.cir file you generated in Step 1.

The Auto Placer will now run placing the two resistors in this simple example netlist. A new expanded net list will appear in the text editor. Note that at this point this version of the net list can be saved to disk using the Save As File command.

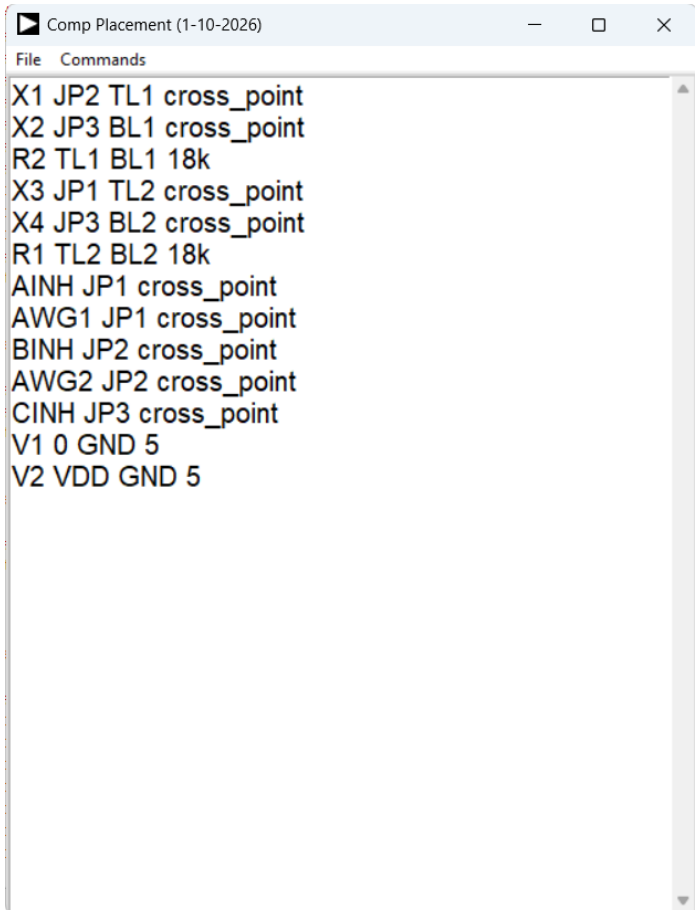

This new netlist has placed resistor R1 between the TL2 and BL2 breadboard holes and resistor R2 between the TL1 and BL1 breadboard holes. It chose the left side breadboard because jumpers in the range JP1-8 were called out in the schematic. If jumpers in the range of JP9-16 were used then it would have placed the components in the right side breadboard. (The order that the components are placed is based on the order they appear in the netlist and not based on the components name)

Now you need to configure the SCB connections from this new expanded net list by selecting the Send from Editor command from the drop down menu.

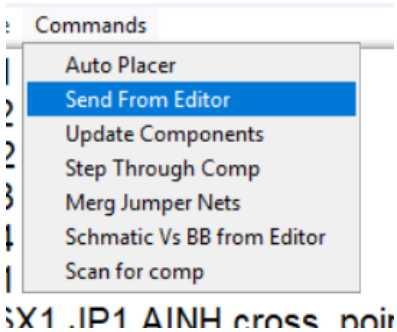

The text screen will now be blanked and the new SCB connections will be displayed.

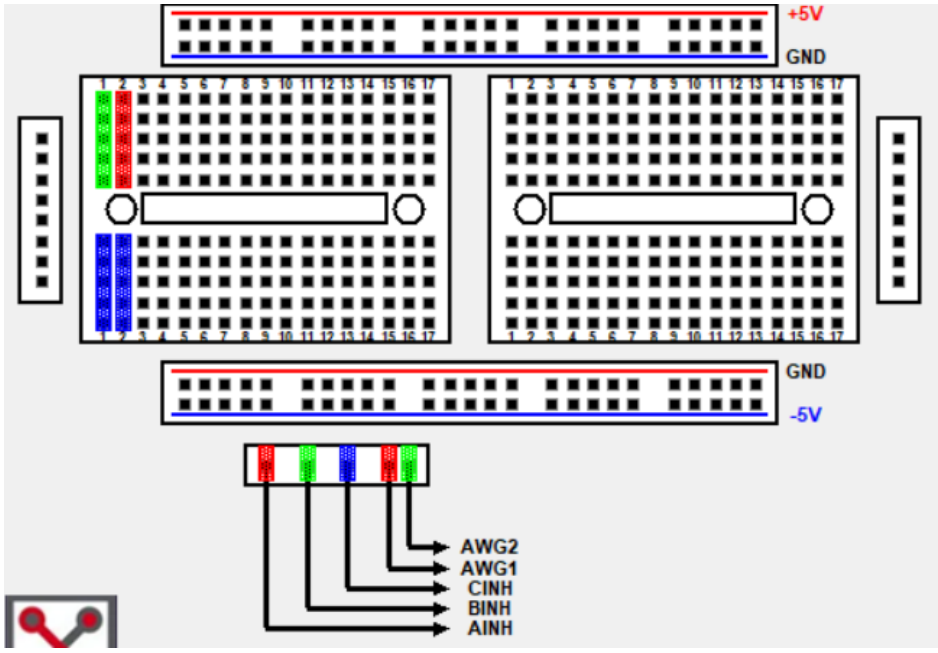

To display where R1 and R2 have been placed select the Update Components command.

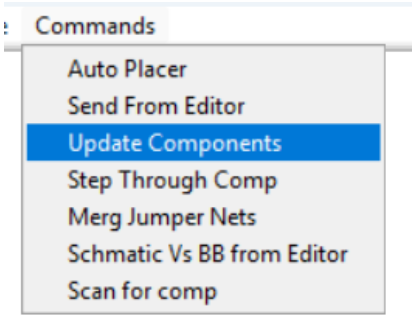

Resistor symbols will now be added to the breadboard display indicating where to insert R1 and R2.

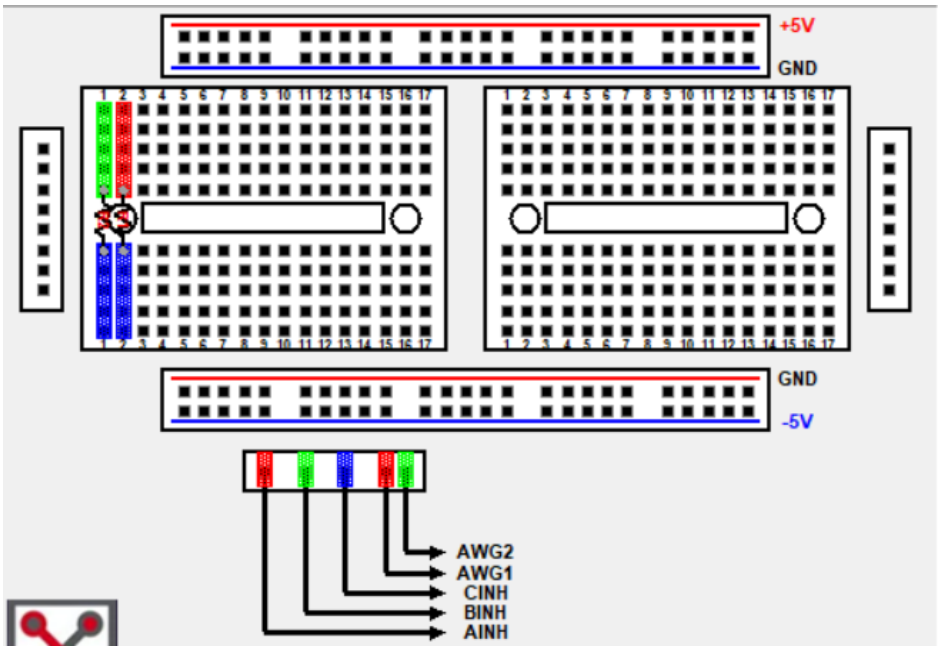

Text showing the location of R1 and R2 will also appear in the Text Editor window.

You can also step through the list of components one at a time by selecting the Step Through Comp command rather than Update Components.

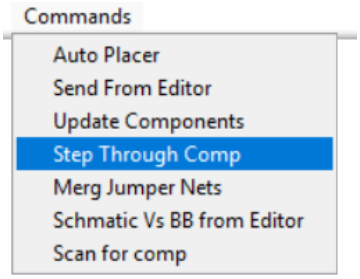

The SCB is now configured and you can procced with setting up the AWG and Scope channels to measure your circuit.