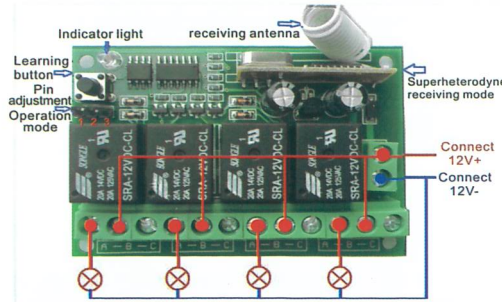

Schematic diagram of control DC12V load connection

1, learning pairing: press releases learning button, the light is off, press any key, the lights flash three under constant light, said the success in learning;
2, clear learning code: press the button to learn about 6 seconds, the indicating lamp is turned on, said stored information have been successfully removed.

◆Note: only the remote control this product is equipped with a remote control four keys within the fixed code and learning code, and each roadhas key code provisions, so different keys or key combinations can be output

Four, the choice of working mode:

A, self-locking - with short circuit to connect the 2\3 position
B, non locking - short circuit to take the vacant connection
C, interlock - connect the 1\2 position with a short circuit

12 volt learning type four remote control switch GV-RK04S-12 manual

A: functional features

1, mainly used in: remote control electric doors, windows, switches, security and other industrial or lighting remote control areas.
2, four passive output.
3, can change the way through jumper cap. Non lock and latch and interlock outputs.
4, high sensitivity, remote control distance of up to 50 meters to more than 100 meters.
6, the use of large capacity relay, can control the electrical equipment and equipment.
7 the use of wireless coding technology, no direction, no interference with each other, windows, switches, security and other industrial or lighting remote control areas.

Two, the main technical indicators

1, working voltage: DC12V (AC / DC alternative voltage can be customized)
2 operating frequency: 315/433.92MHz (optional other frequency can be customized)
3, working temperature: -40 +80 C
4, the receiving sensitivity is not less than -105dBm
5, the maximum load: 20A
6, size: 72mm "52mm" 26mm

Three, remote learning / removal method