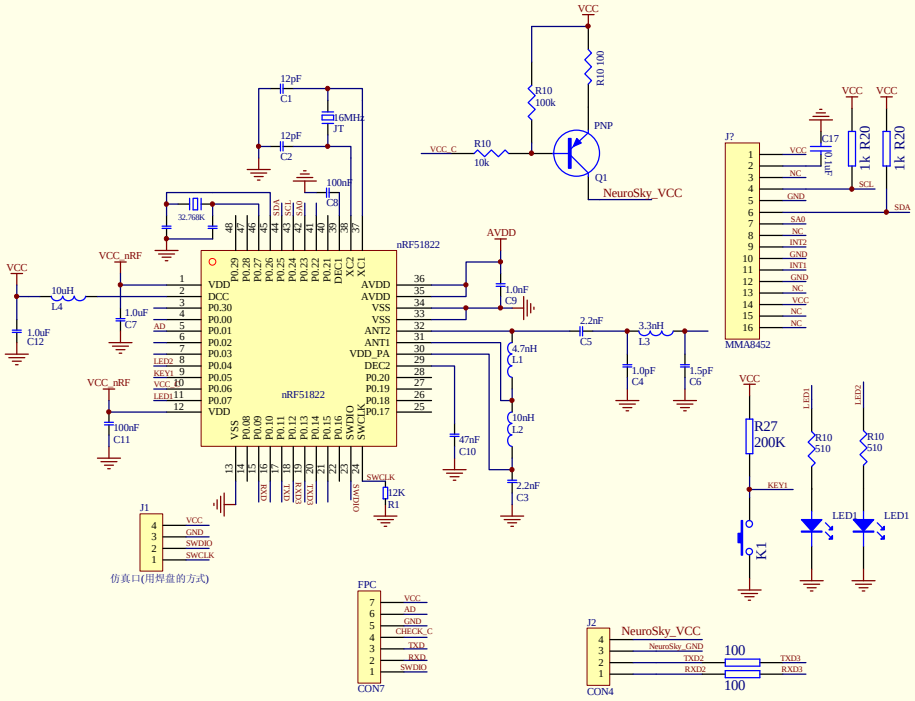

Title		
Size B	Number	Revision
Date: 5-Oct-2013	Sheet of	
File: E:\项目\2013\产品\BLE-3轴加速度\SCH\nRF51822.ddb		

Andrew