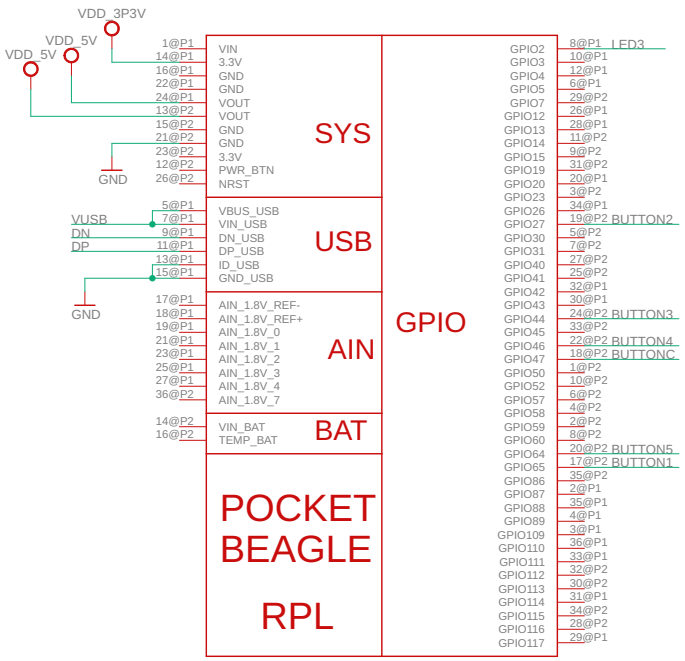

PocketBeagle

3 pin 100 mil Header

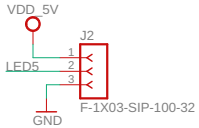

Level Shifter

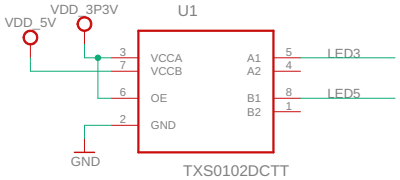

USB

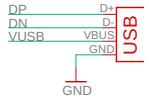

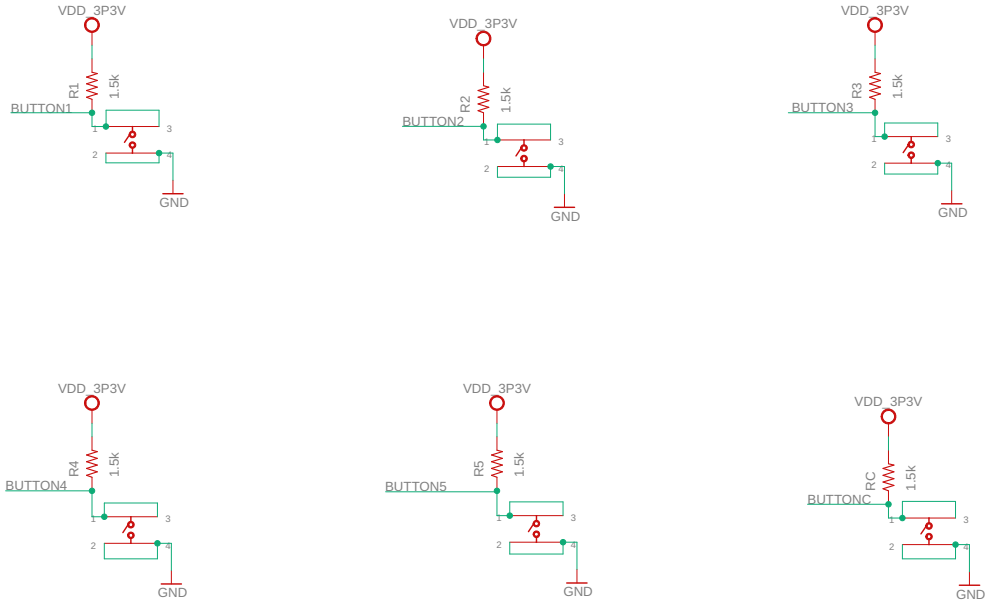

Buttons

Fiducials

Mounting Holes

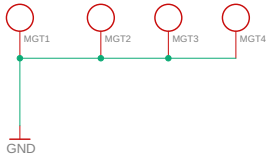

PCB for Multi-Fandom Kpop Fan Light with Music	Rebecca Liu
	Project_02_PCB
	12/20/19 11:07 PM
	Sheet: 1/1