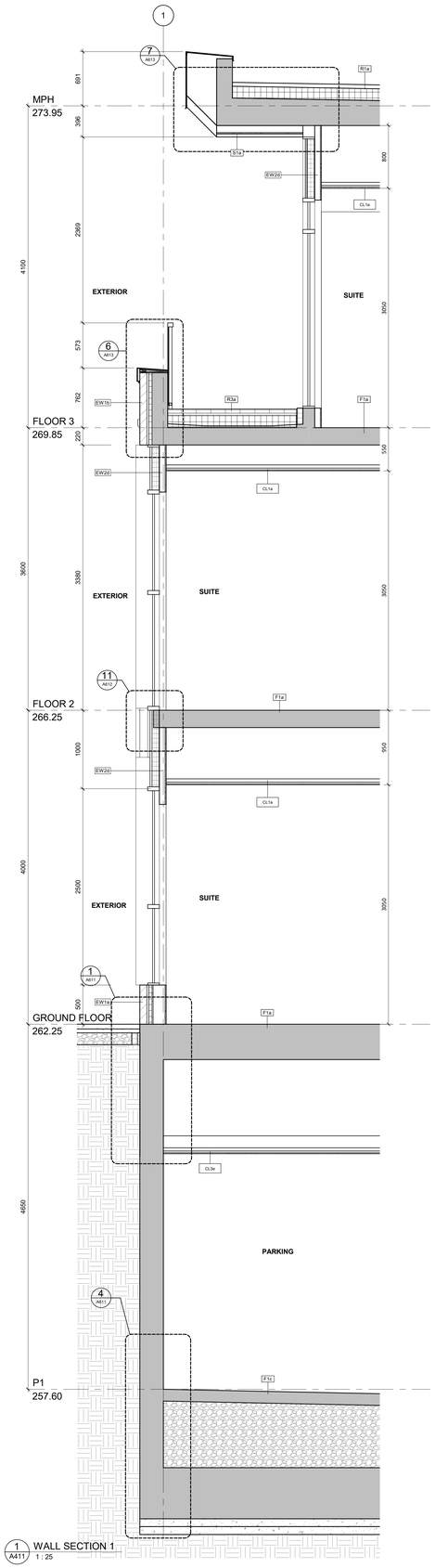

1 A411 WALL SECTION 1
1 : 25

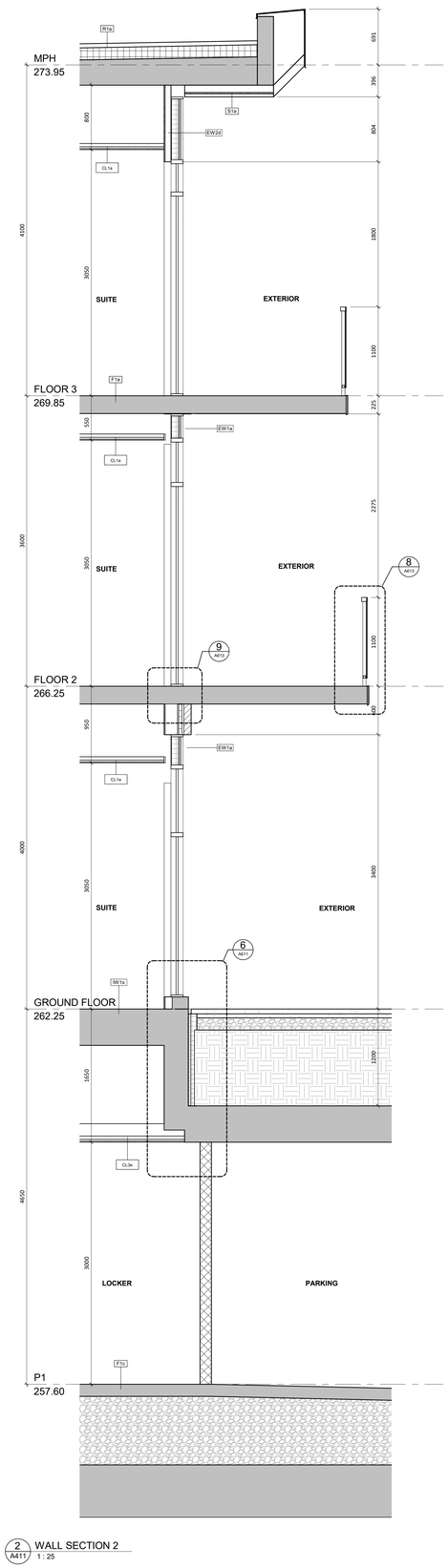

2 A411 WALL SECTION 2
1 : 25

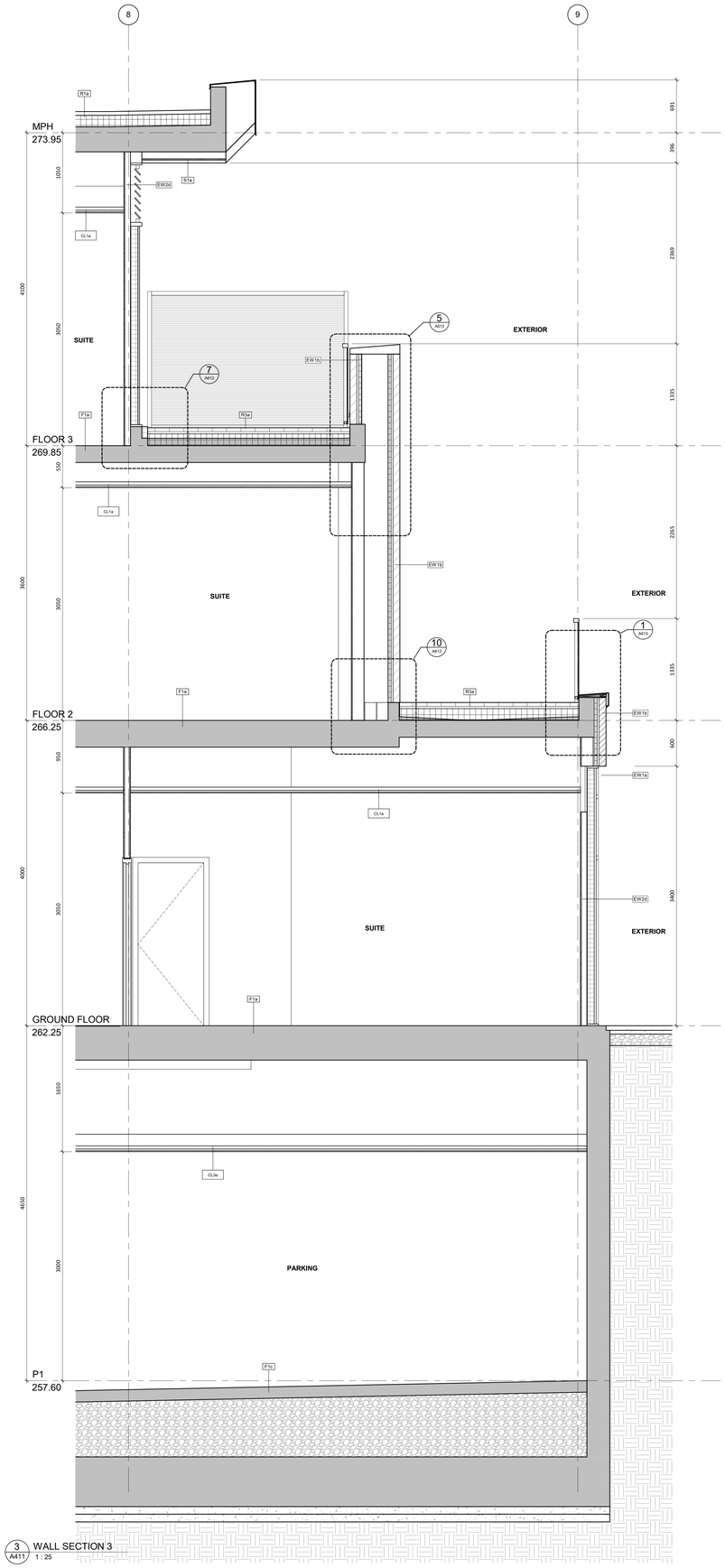

3 A411 WALL SECTION 3
1 : 25

This drawing, as an instrument of service, is provided by and is the property of Turner Fleischer Architects Inc. and may not be used or reproduced without the consent of Turner Fleischer Architects Inc. Contractor shall verify and accept responsibility for all dimensions and conditions on site and must notify Turner Fleischer Architects Inc. of any variations from the supplied information. This drawing is not to be scaled. The architect is not responsible for the accuracy of CAD files or any reproduced information other than signed and sealed drawings. This drawing is to be read in conjunction with all other relevant consultant's drawings and specifications. Construction must conform to all applicable codes and requirements of authorities having jurisdiction. The contractor working from these drawings and specifications is deemed to be qualified and assumes full responsibility and bear costs for any corrections or damages resulting from his work.

#	DATE	DESCRIPTION	BY

DRAWING

WALL SECTIONS

PROJECT NO	21.001CS
PROJECT DATE	2021-05-01
DRAWN BY	CJF
CHECKED BY	MY
SCALE	1 : 25
DRAWING NO	A411
REV.	

2022-02-22 12:27:30 PM