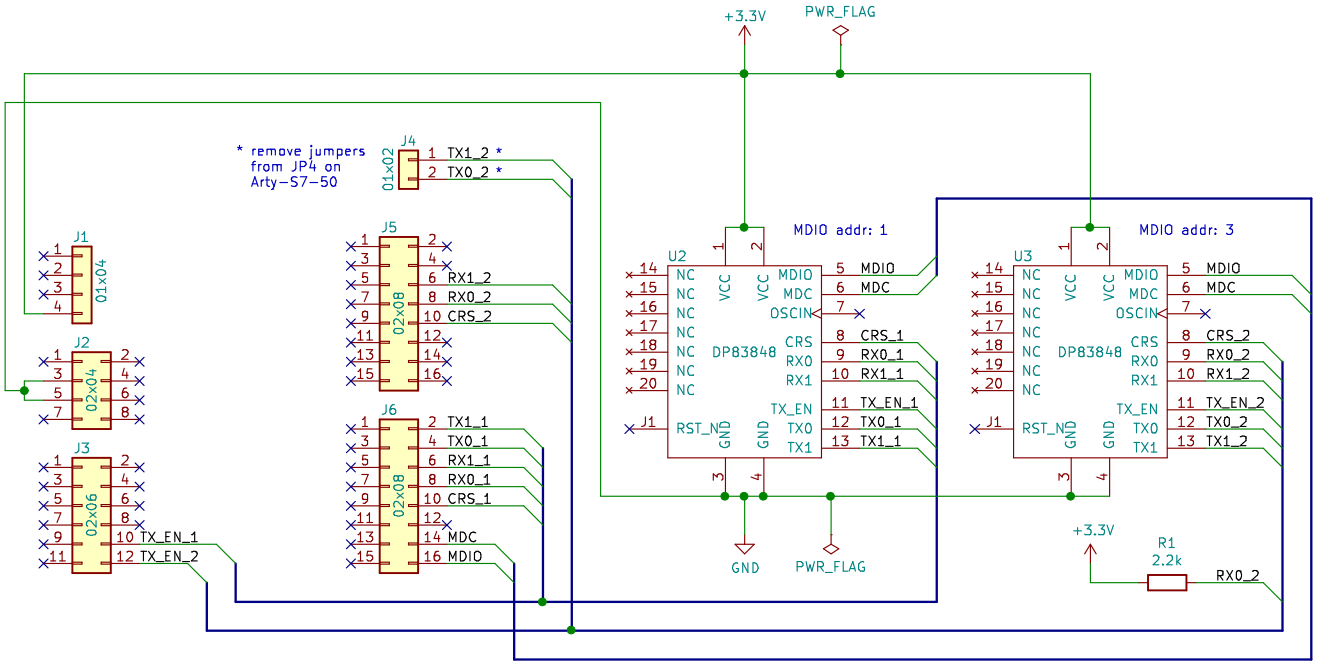

Two RMII Ethernet PHYs for Arty-S7-50

richard.prinz@min.at 2020

Sheet: /
File: arty_ethernet_shield_github.sch

Title:

Size: A4	Date:	Rev:
KiCad E.D.A. eeschema 5.1.6-c6e7f7d86ubuntu18.04.1		Id: 1/1