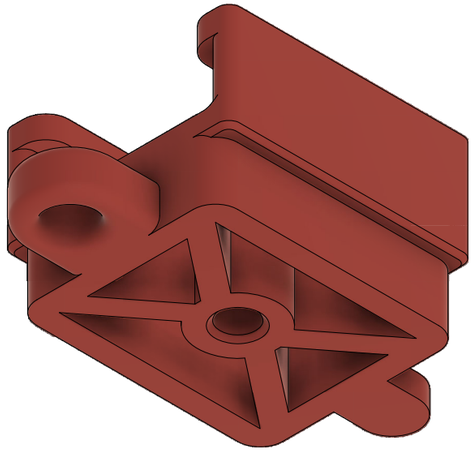

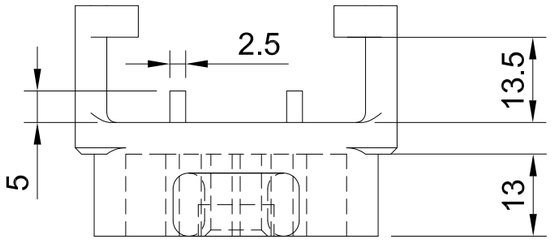

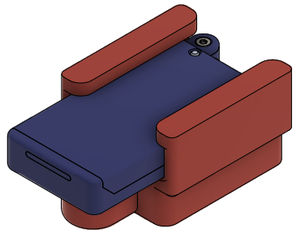

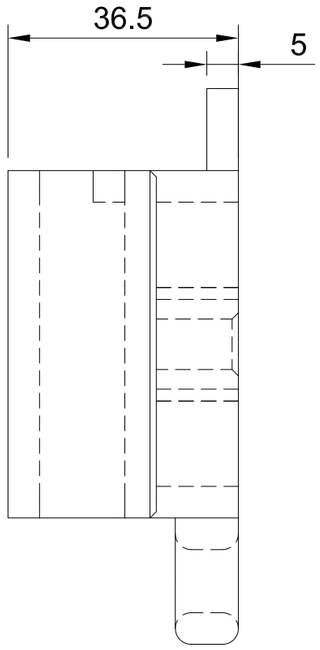

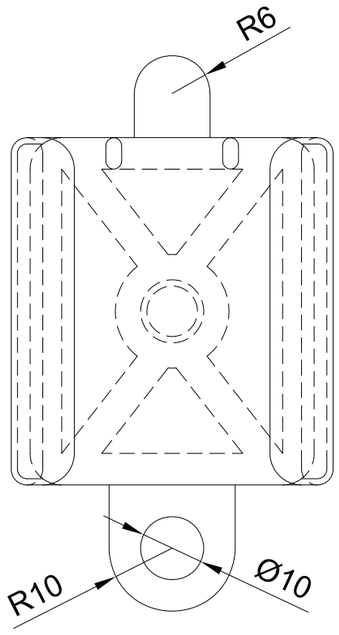

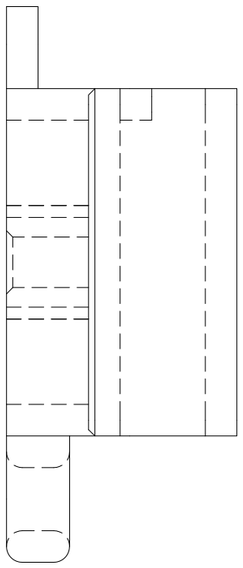

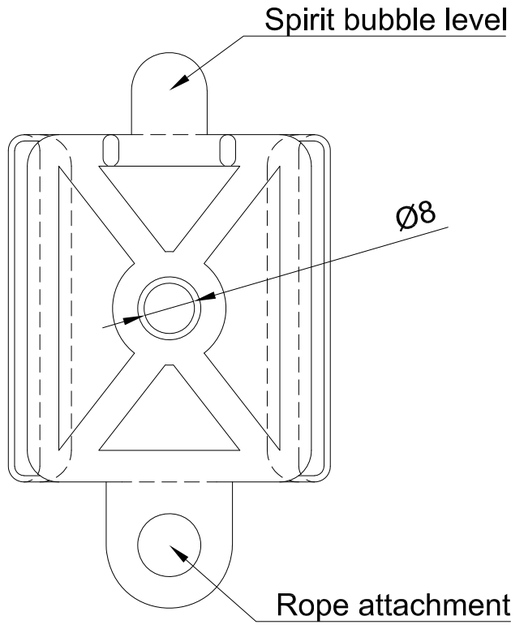

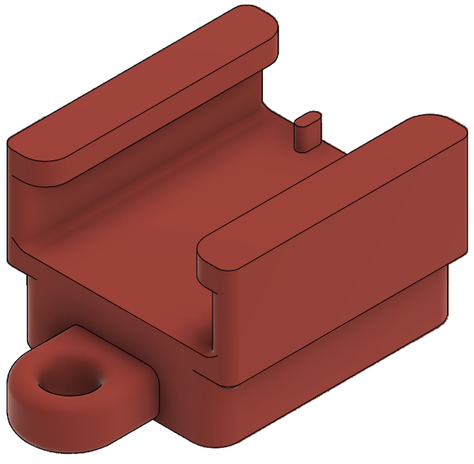

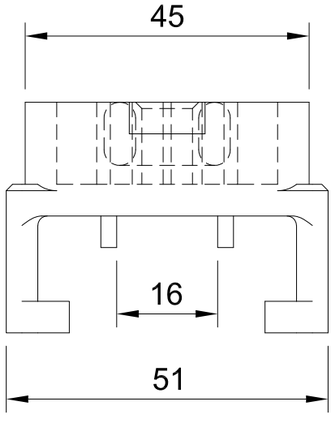

Dept.	Dimension Unit / Scale	Created by	Approved by
BIC/IoT	mm / 1:1	René Ramsauer 19.04.2023	Dominik Widhalm (In Progress)
This is a design which was created in the course of Mr. Ramsauer's bachelor thesis. Any design and construction is legally to be seen as intellectual property of Mr. Ramsauer René.		Document type: Technical drawing	Document status: Acceptance Requested
		Title: Tripod tag holder Measuring Unit Bachelor thesis IoT - Localization Tracker	DWG No.: 021-103-A
			Rev.: 1 · Date of issue: 19.04.2023 · Sheet: 1/1

FH University of Applied Sciences TECHNIKUM WIEN