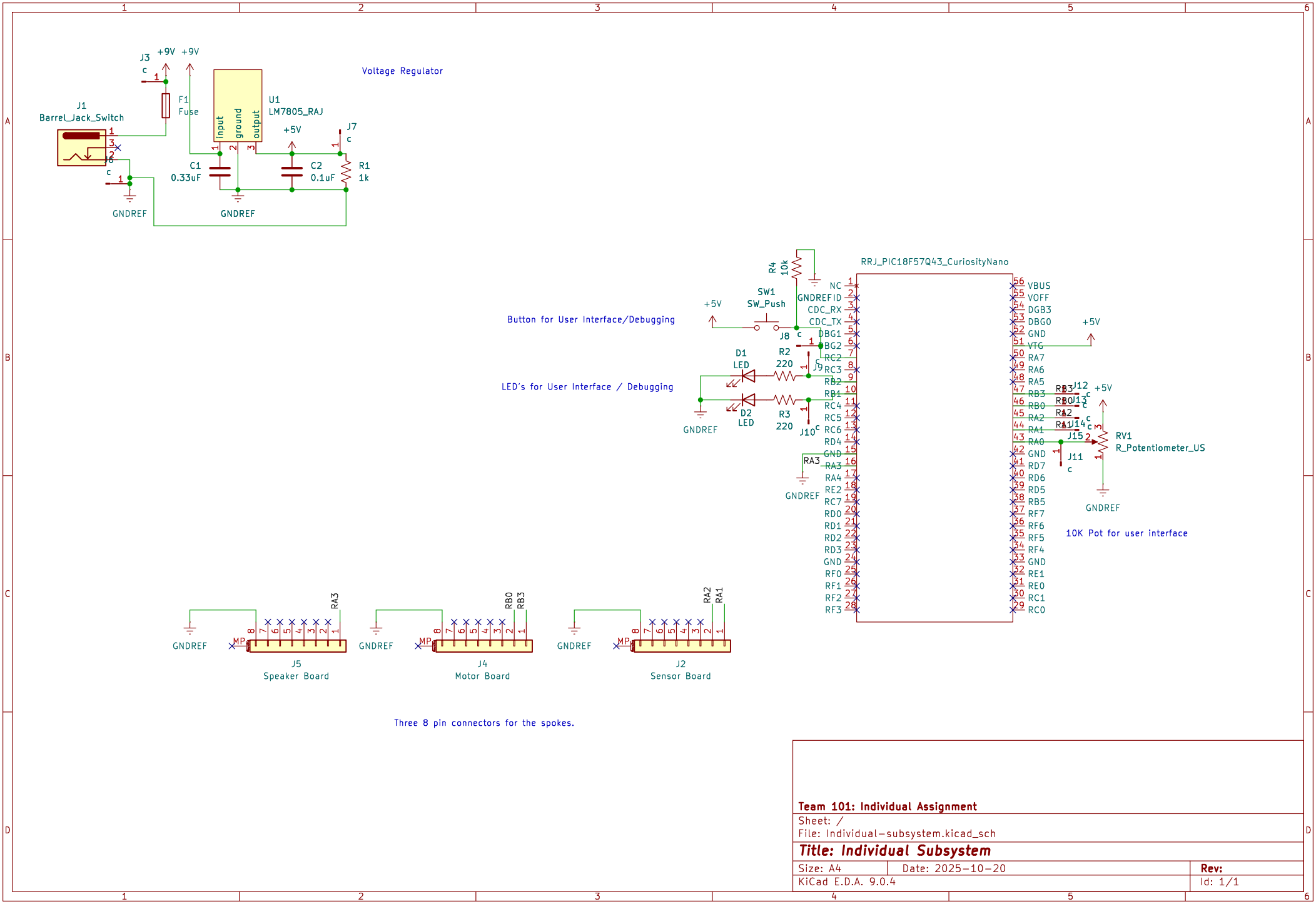

Team 101: Individual Assignment

Sheet: /

File: Individual-subsystem.kicad_sch

Title: Individual Subsystem

Size: A4	Date: 2025-10-20	**Rev:**
KiCad E.D.A. 9.0.4		Id: 1/1