MODIFICATIONS		
DATE	NAME	DESCRIPTION

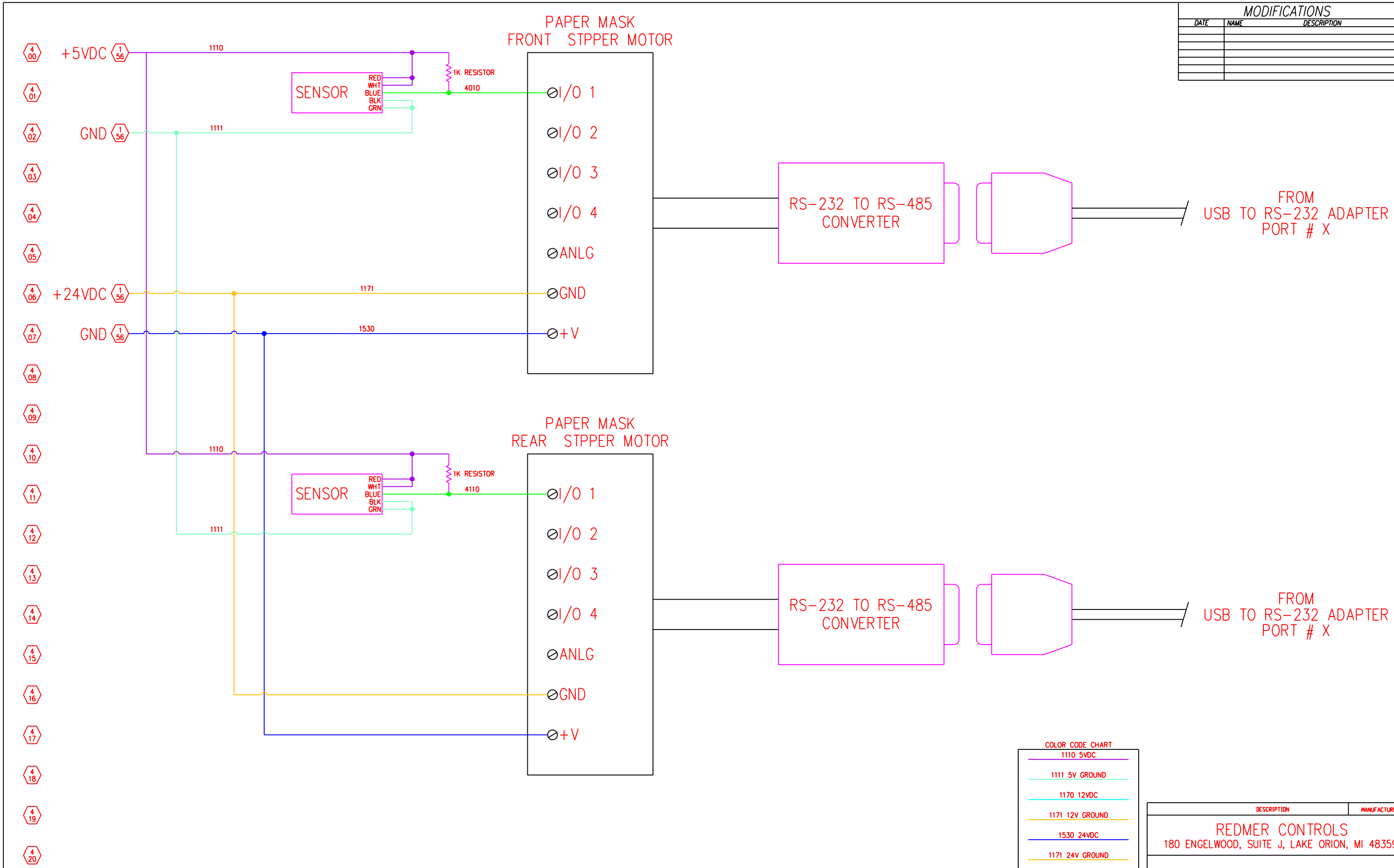

DESCRIPTION	MANUFACTURER
REDMER CONTROLS 180 ENGELWOOD, SUITE J, LAKE ORION, MI 48359	
PRINTER LAYOUT	

SCALE	D	SHEET 4	SHEETS 8	FILE NAME: PRINTER-E04 JOB No. DIGITAL VP2 PRINTER (DVP2)