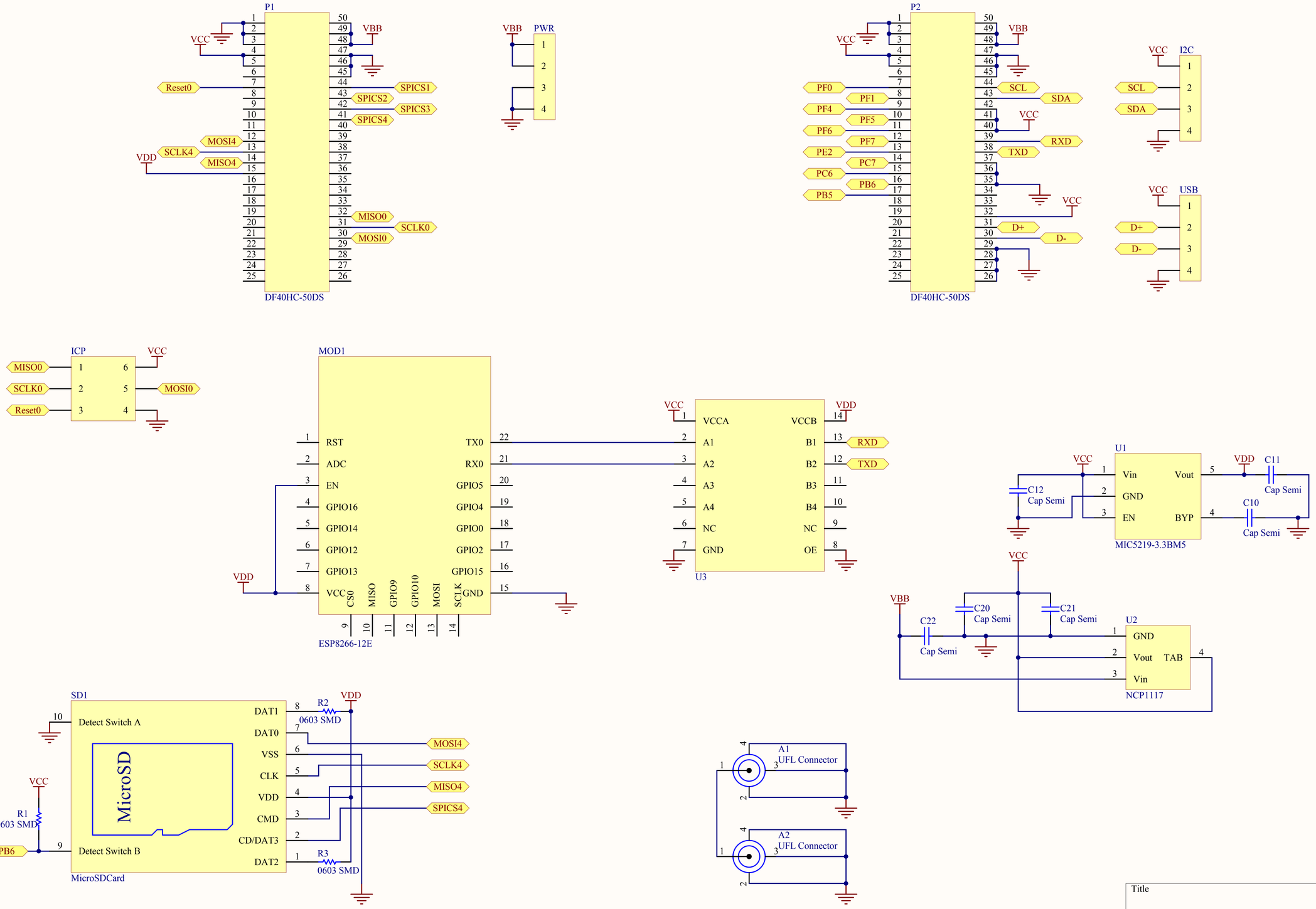

Title		
Size B	Number	Revision
Date: 11/22/2016	Sheet of	
File: D:\PCB_Files\..\NEMA8UIBoard.SCHDOC	Drawn By:	

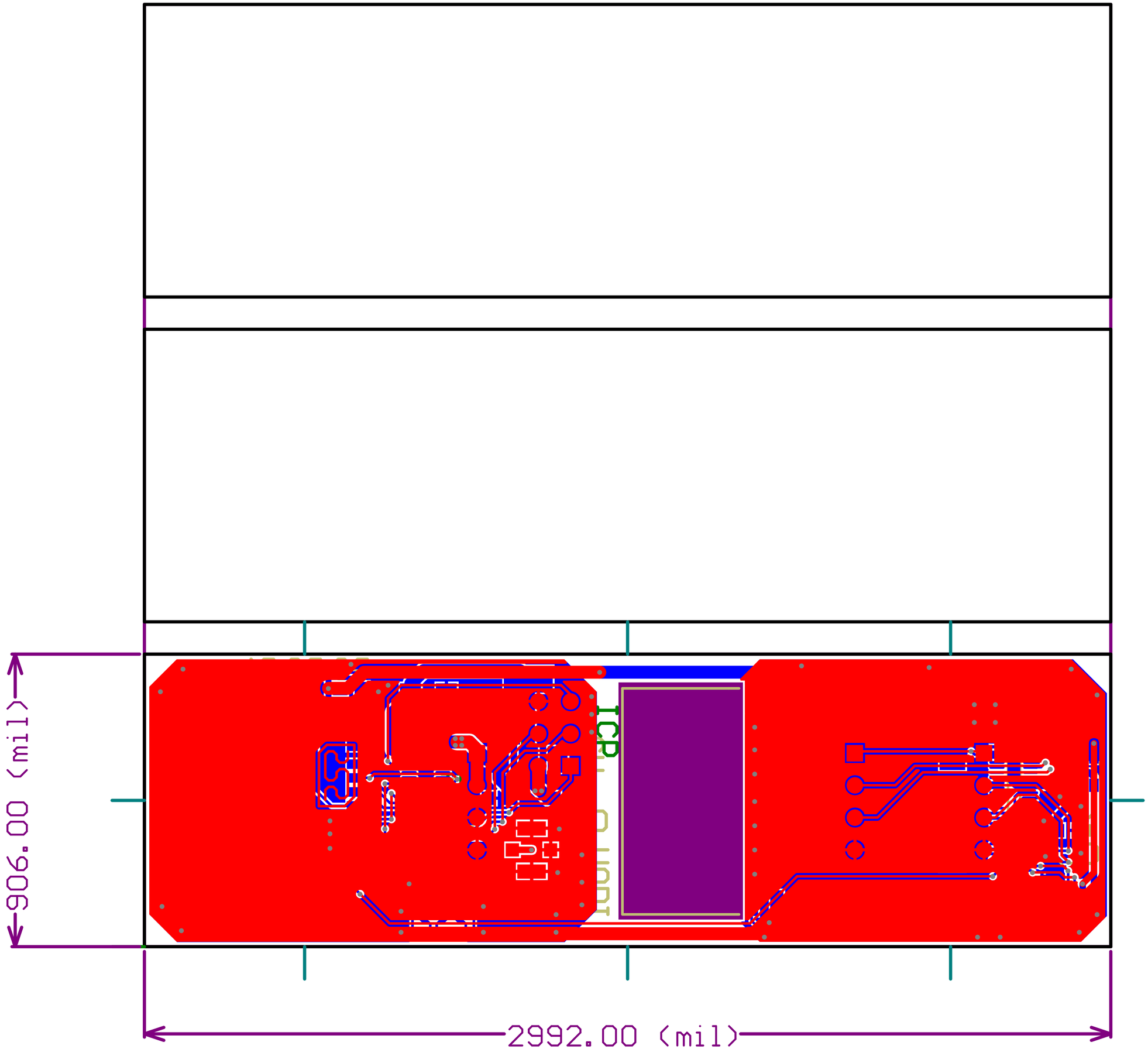
906.00 (mil)
2992.00 (mil)