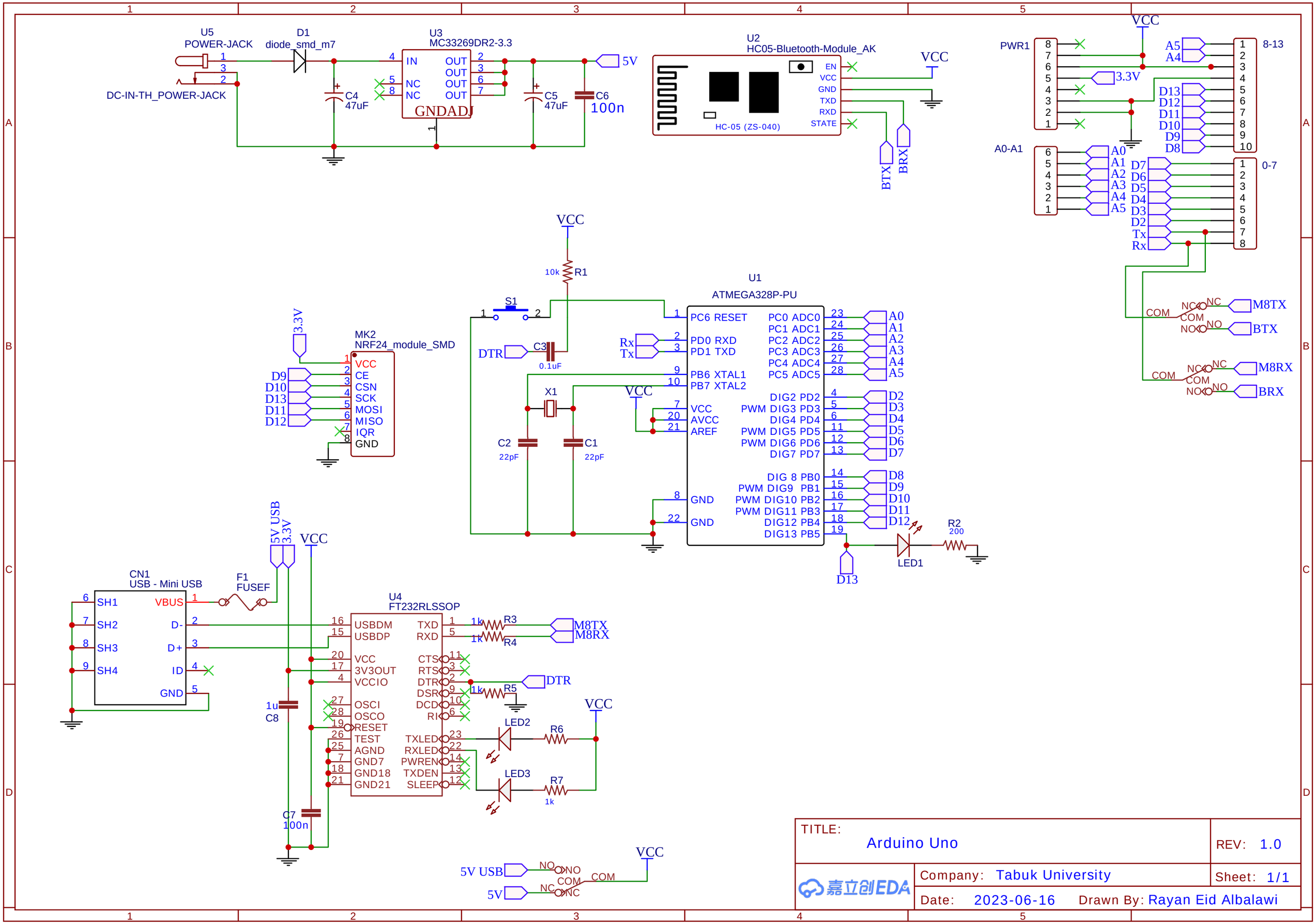

TITLE: Arduino Uno	REV: 1.0
Company: Tabuk University	Sheet: 1/1
Date: 2023-06-16 Drawn By: Rayan Eid Albalawi	