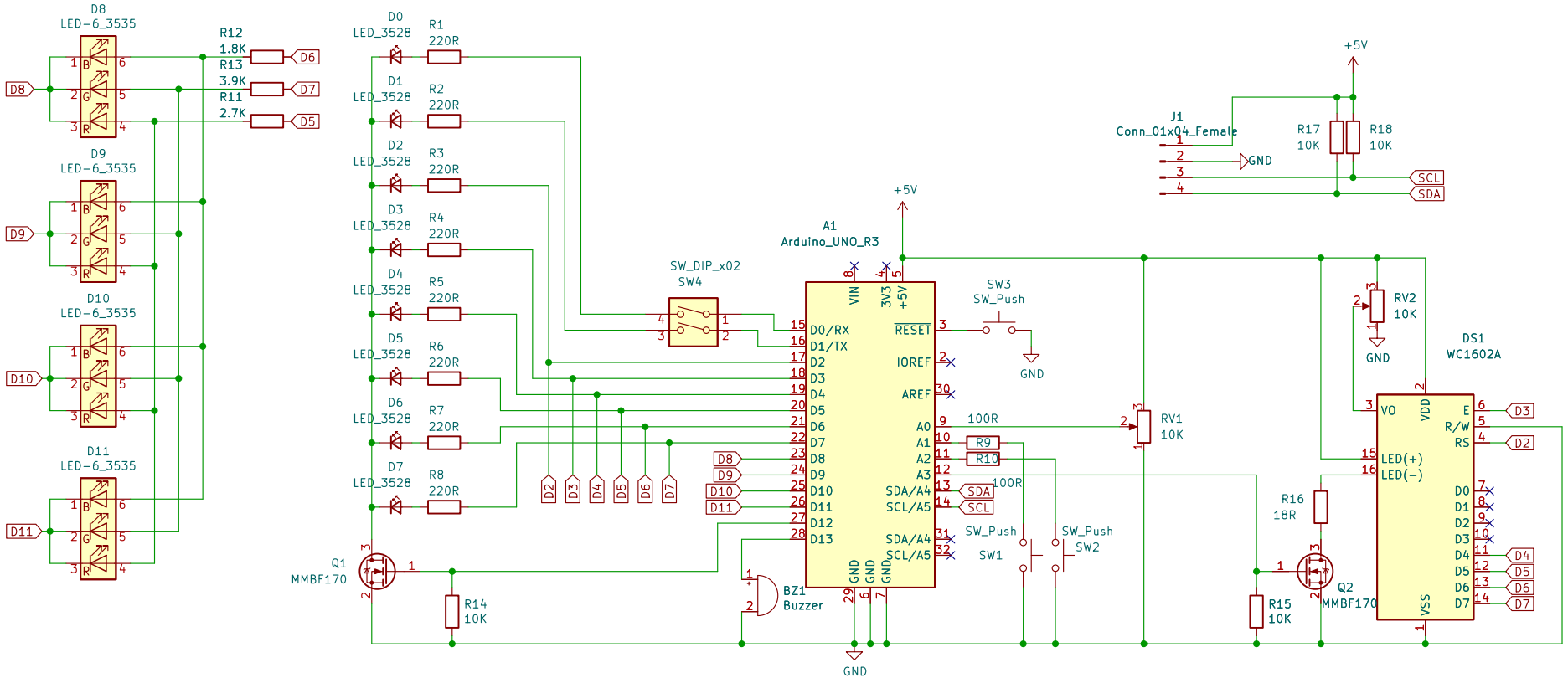

Shield for Arduino Uno

License: CC-BY-SA 4.0

Designed by Robert Sedak, Vladimir Mitrović

Sheet: /

File: shield_a_v2.0.1.kicad_sch

Title: Shield-A

Size: A4	Date: 2022-12-08	**Rev: 2.0.1**
KiCad E.D.A. kicad 6.0.11-2627ca5db0~126~ubuntu20.04.1		Id: 1/1

Reference Designs ARE PROVIDED "AS IS" AND "WITH ALL FAULTS". Authors DISCLAIMS ALL OTHER WARRANTIES, EXPRESS OR IMPLIED, REGARDING PRODUCTS, INCLUDING BUT NOT LIMITED TO, ANY IMPLIED WARRANTIES OF MERCHANTABILITY OR FITNESS FOR A PARTICULAR PURPOSE. Authors may make changes to specifications and product descriptions at any time, without notice. The Customer must notrely on the absence or characteristics of any features or instructions marked "reserved" or "undefined." Authors reservesthese for future definition and shall have no responsibility whatsoever for conflicts or incompatibilities arising from future changes to them. The product information on the Web Site or Materials is subject to change without notice. Do not finalize a design with this info.