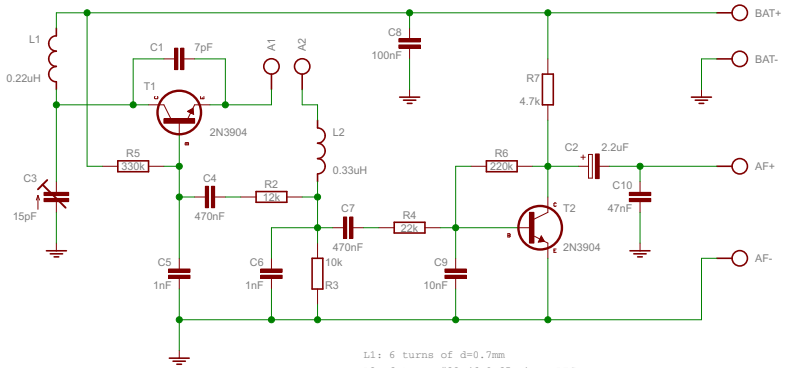
BAT+
BAT-
AF+
AF-
L1
0.22uH
C1
7pF
A1
A2
C8
100nF
T1
2N3904
R7
4.7k
L2
0.33uH
R5
330k
R6
220k
C2
2.2uF
C3
15pF
C4
470nF
R2
12k
C7
470nF
R4
22k
T2
2N3904
C10
47nF
C5
1nF
C6
1nF
10k
R3
C9
10nF
L1: 6 turns of d=0.7mm
L2: 6 turns #22 (d=0.65mm) on BIC pen
0.319" or 8.12mm in diameter

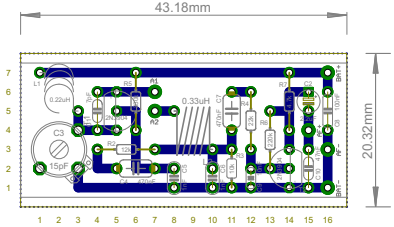
43.18mm
20.32mm
0.22uH
C3
15pF
0.33uH
A1
A2
R4
R5
R2
R3
R6
R7
R8
R9
R10
R11
R12
R13
R14
R15
R16
C1
C2
C4
C5
C6
C7
C8
C9
C10
C11
C12
C13
C14
C15
C16
L1
L2
L3
L4
L5
L6
L7
L8
L9
L10
L11
L12
L13
L14
L15
L16
1 2 3 4 5 6 7 8 9 10 11 12 13 14 15 16
7 6 5 4 3 2 1

20.35mm
81.64mm