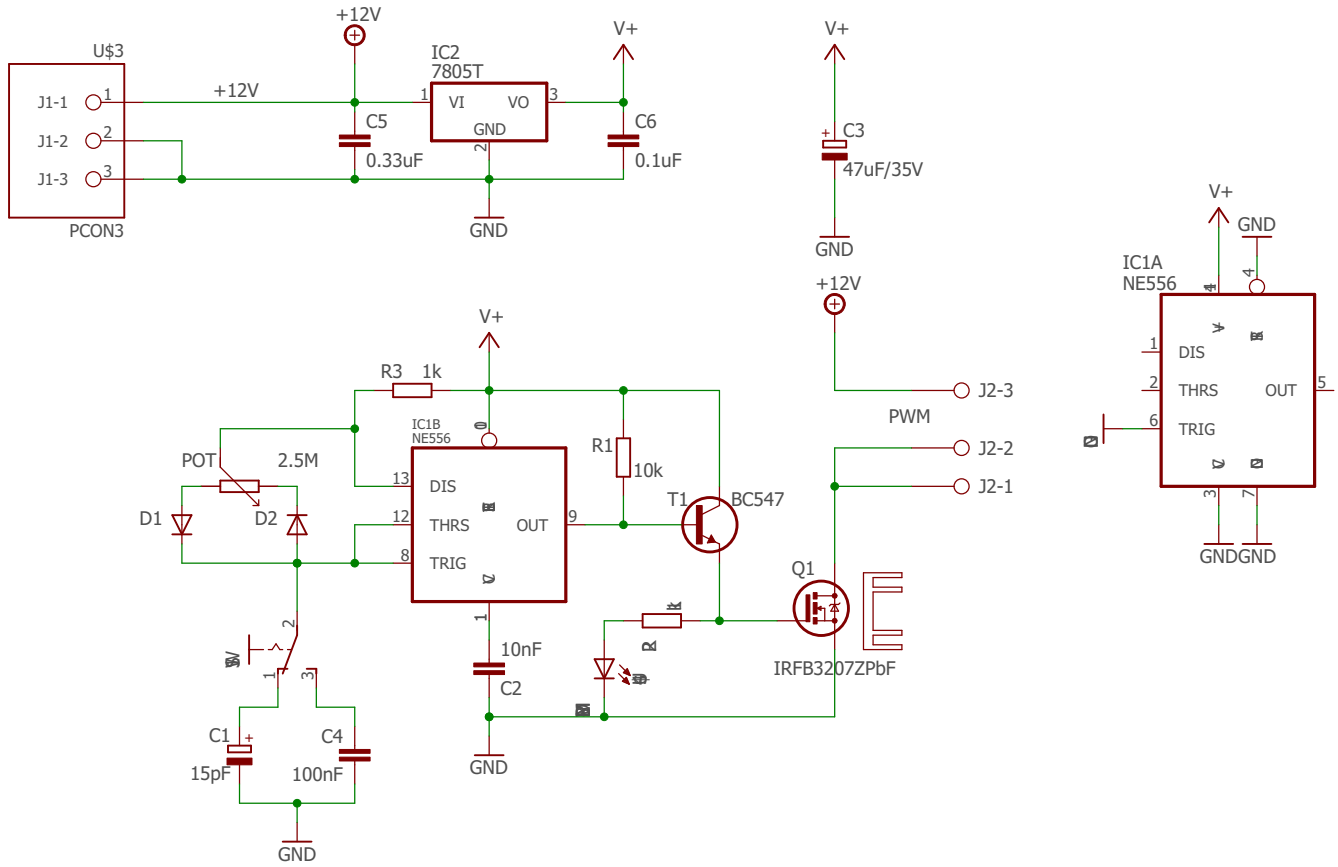
U$3
J1-1
J1-2
J1-3
PCON3
+12V
C5
0.33uF
IC2
7805T
VI
VO
GND
C6
0.1uF
V+
C3
47uF/35V
IC1A
NE556
DIS
THRS
TRIG
OUT
R3 1k
IC1B
NE556
POT
2.5M
D1
D2
R1
10k
T1
BC547
J2-3
J2-2
J2-1
PWM
Q1
IRFB3207ZPbF
10nF
C2
C1
15pF
C4
100nF

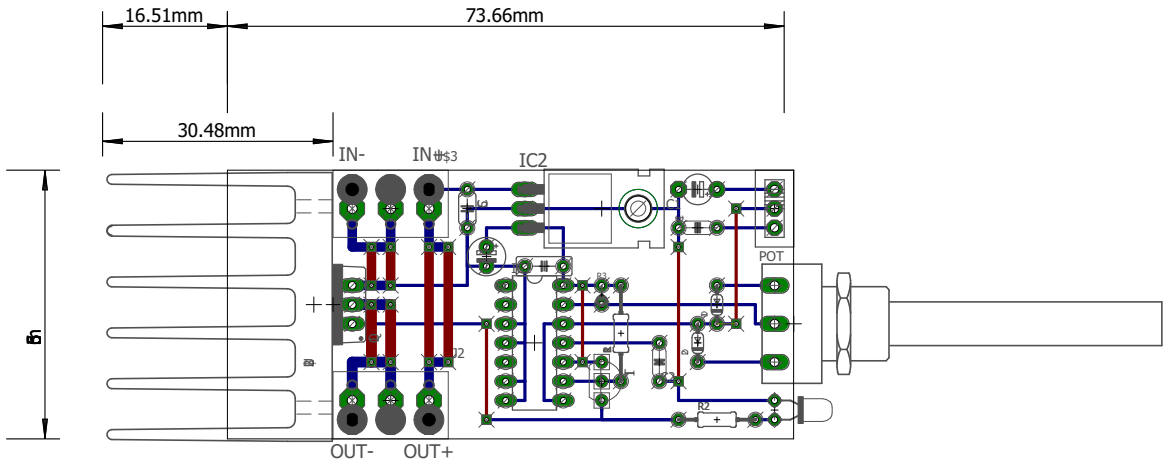
16.51mm
73.66mm
30.48mm
IN-
IN+
IC2
POT
OUT-
OUT+

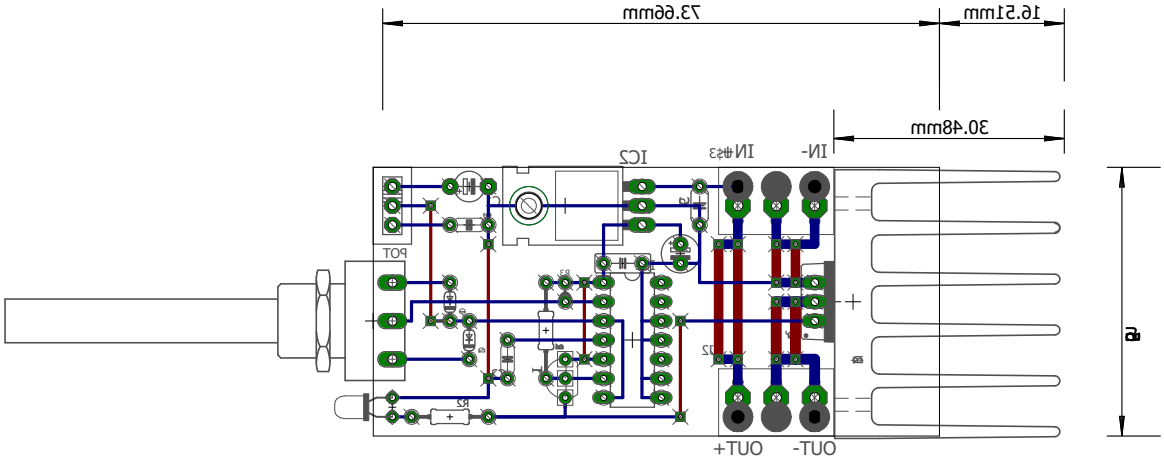
73.66mm
16.51mm
30.48mm
IC2
IN+
IN-
POT
+OUT
-OUT