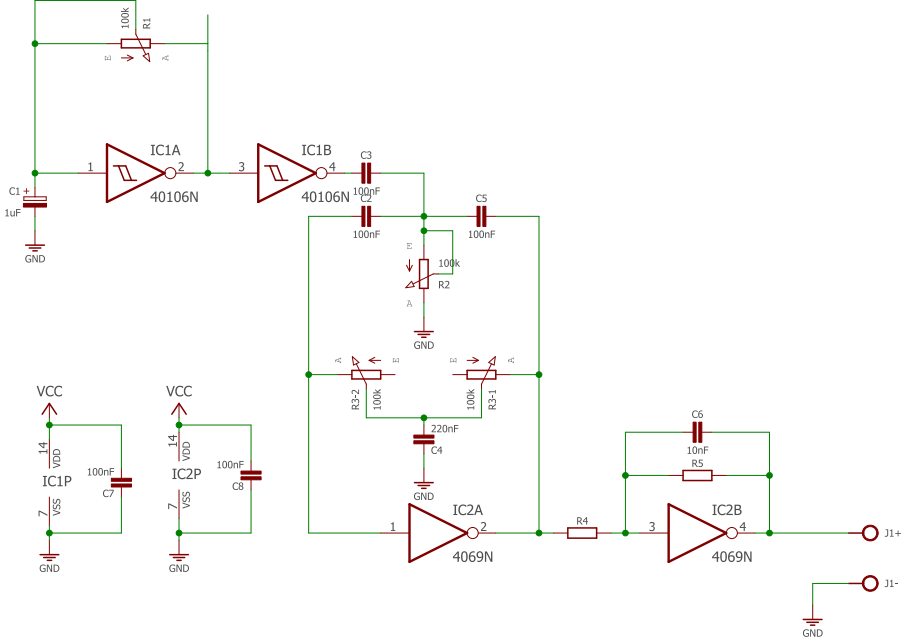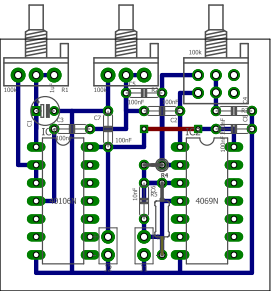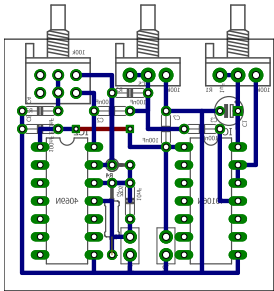
100k
R1
IC1A
40106N
IC1B
40106N
C1
1uF
GND
C3
100nF
C2
100nF
C5
100nF
100k
R2
GND
R3-2
100k
100k
R3-1
220nF
C4
GND
VCC
VCC
IC1P
VDD
VSS
100nF
C7
IC2P
VDD
VSS
100nF
C8
GND
GND
IC2A
4069N
R4
C6
10nF
R5
IC2B
4069N
J1+
J1-
GND