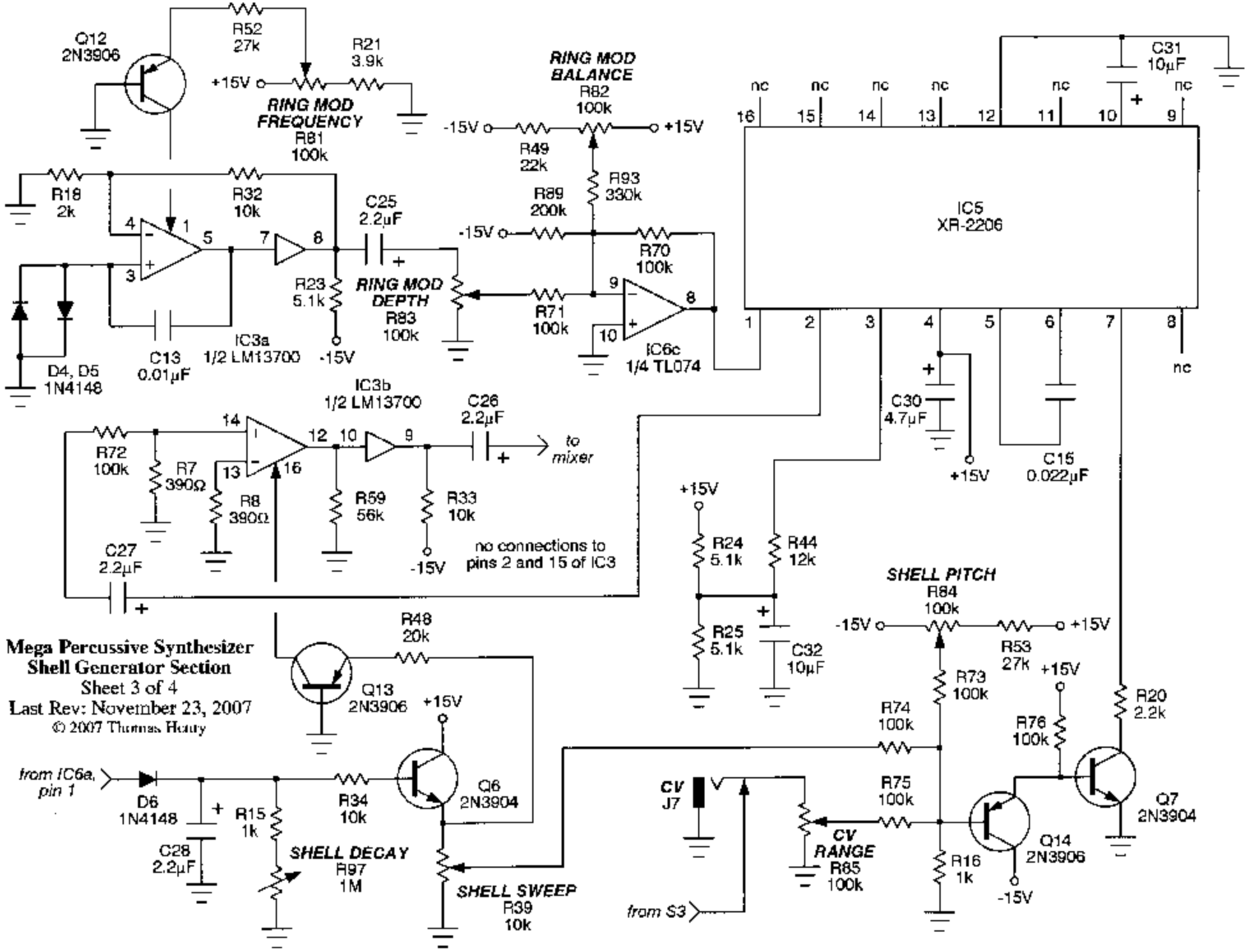
Q12
2N3906
R52
27k
R21
3.9k
+15V
RING MOD
FREQUENCY
R81
100k
RING MOD
BALANCE
R82
100k
-15V
+15V
R49
22k
R93
330k
R89
200k
R70
100k
R71
100k
IC6c
1/4 TL074
R18
2k
R32
10k
C25
2.2µF
R23
5.1k
RING MOD
DEPTH
R83
100k
IC3a
1/2 LM13700
C13
0.01µF
D4, D5
1N4148
IC5
XR-2206
C31
10µF
nc
C30
4.7µF
C15
0.022µF
IC3b
1/2 LM13700
C26
2.2µF
to
mixer
R72
100k
R7
390Ω
R8
390Ω
R59
56k
R33
10k
C27
2.2µF
no connections to
pins 2 and 15 of IC3
R24
5.1k
R44
12k
R25
5.1k
C32
10µF
SHELL PITCH
R84
100k
R53
27k
R73
100k
R74
100k
R76
100k
R20
2.2k
Q7
2N3904
Q14
2N3906
R16
1k
R75
100k
CV
RANGE
R65
100k
CV
J7
from S3
R48
20k
Q13
2N3906
Q6
2N3904
from IC6a,
pin 1
D6
1N4148
C28
2.2µF
R15
1k
R34
10k
SHELL DECAY
R97
1M
SHELL SWEEP
R39
10k
Mega Percussive Synthesizer
Shell Generator Section
Sheet 3 of 4
Last Rev: November 23, 2007
© 2007 Thomas Henry