http://www.electronics-diy.com/4x4.php

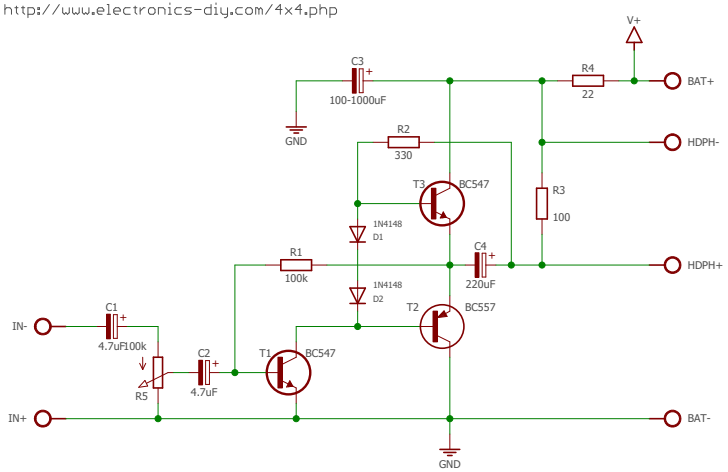

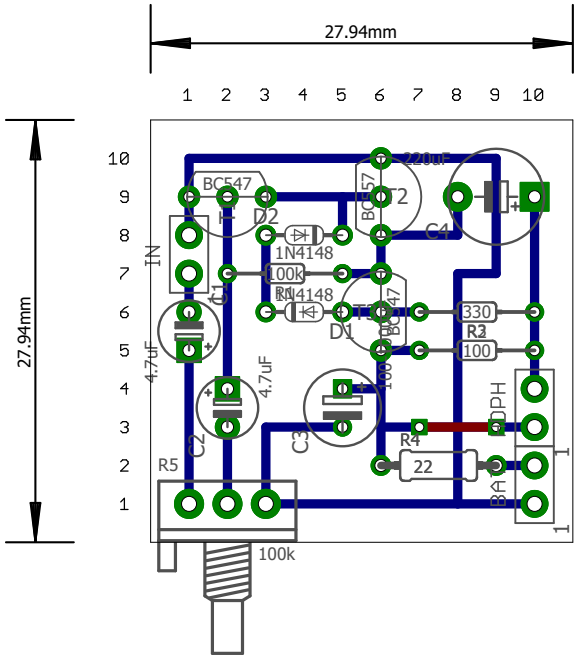
27.94mm
27.94mm
1 2 3 4 5 6 7 8 9 10
10 9 8 7 6 5 4 3 2 1
BC547
T1
D2
1N4148
100k
R1
1N4148
D1
BC547
T2
BC547
220uF
C4
330
R2
100
IN
C1
4.7uF
C2
4.7uF
C3
100
R4
22
R5
100k
OPH
8A
1
1

27.94mm
22.94mm
100K
R5
C1
4.7µF
C3
4.7µF
R4
22
8pin
DPDT
100
R3
330
D4
1N4148
100K
1N4148
D2
1N4148
IN1
BC547
T1
T2
C2
4.7µF