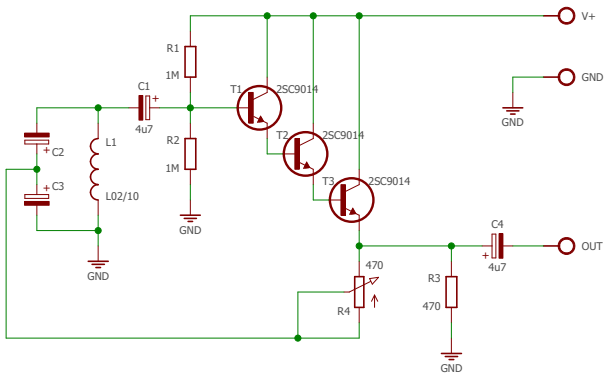
V+
GND
GND
R1
1M
C1
4u7
T1
2SC9014
T2
2SC9014
T3
2SC9014
R2
1M
GND
C2
C3
L1
L02/10
GND
C4
4u7
OUT
470
R4
R3
470
GND

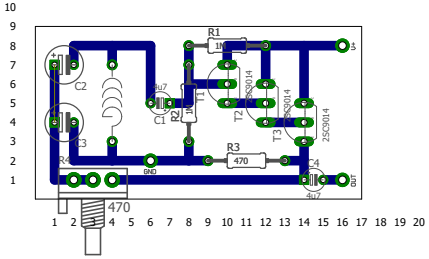
R1
470
C2
C3
C1
R2
T1
T2
T3
2SC9014
2SC9014
2SC9014
R3
470
GND
470

0Lv
C1
1nF
R5
1M
T2
2SC9014
T3
2SC9014
R3
0Lv
C3
1nF
C2
1nF
T1
2SC9014
R1
1M
GND
IN
OUT