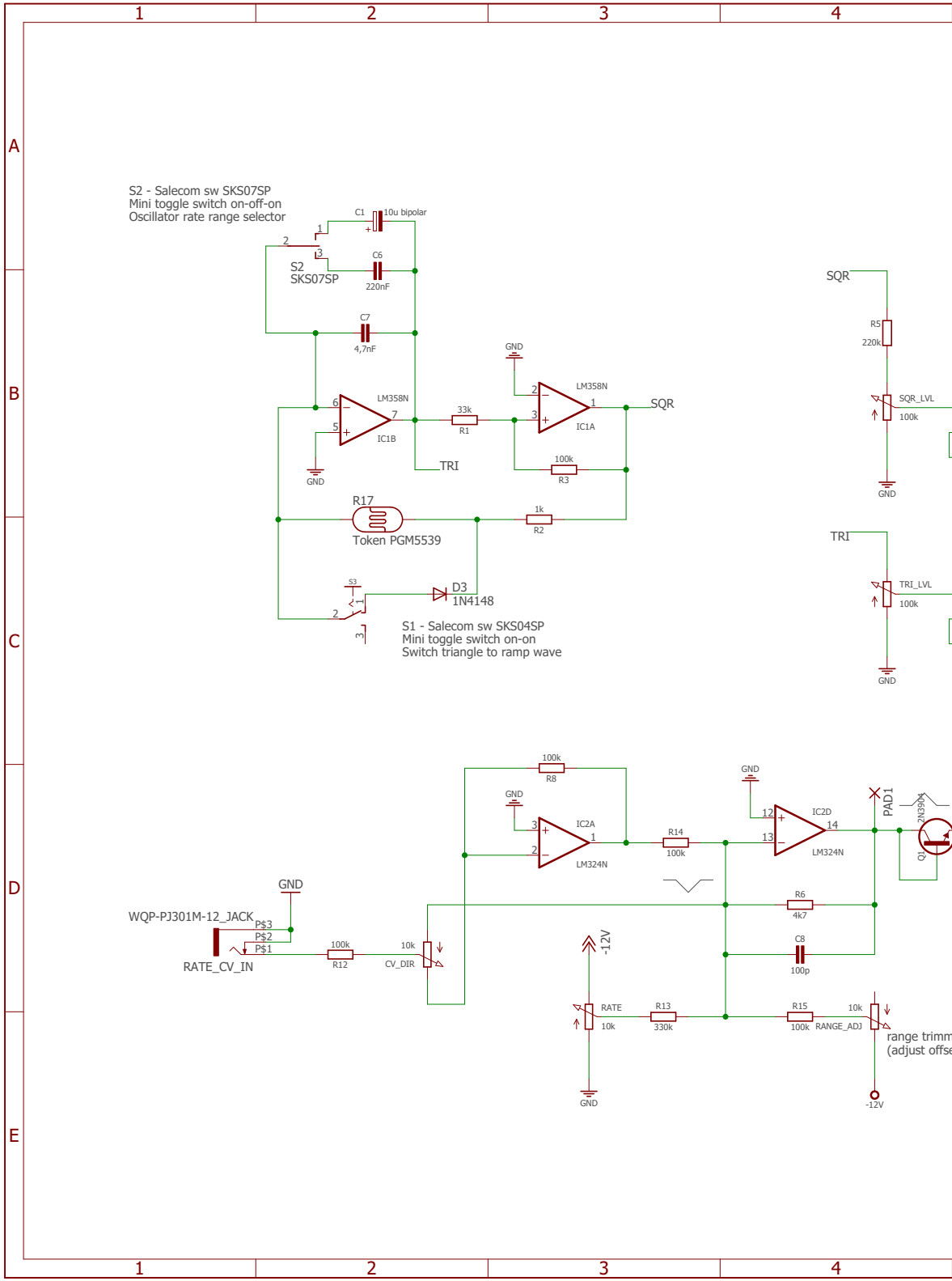
S2 - Salecom sw SKS07SP
Mini toggle switch on-off-on
Oscillator rate range selector
C1
10u bipolar
S2
SKS07SP
C6
220nF
C7
4,7nF
LM358N
IC1B
33k
R1
LM358N
IC1A
SQR
100k
R3
TRI
GND
R17
Token PGM5539
1k
R2
D3
1N4148
S1 - Salecom sw SKS04SP
Mini toggle switch on-on
Switch triangle to ramp wave
SQR
R5
220k
SQR_LVL
100k
TRI
TRI_LVL
100k
100k
R8
IC2A
LM324N
R14
100k
IC2D
LM324N
PAD1
Q1
2N3904
WQP-PJ301M-12_JACK
RATE_CV_IN
P$3
P$2
P$1
100k
R12
10k
CV_DIR
R6
4k7
C8
100p
-12V
RATE
10k
R13
330k
R15
100k
10k
RANGE_ADJ
range trimm
(adjust offse
-12V

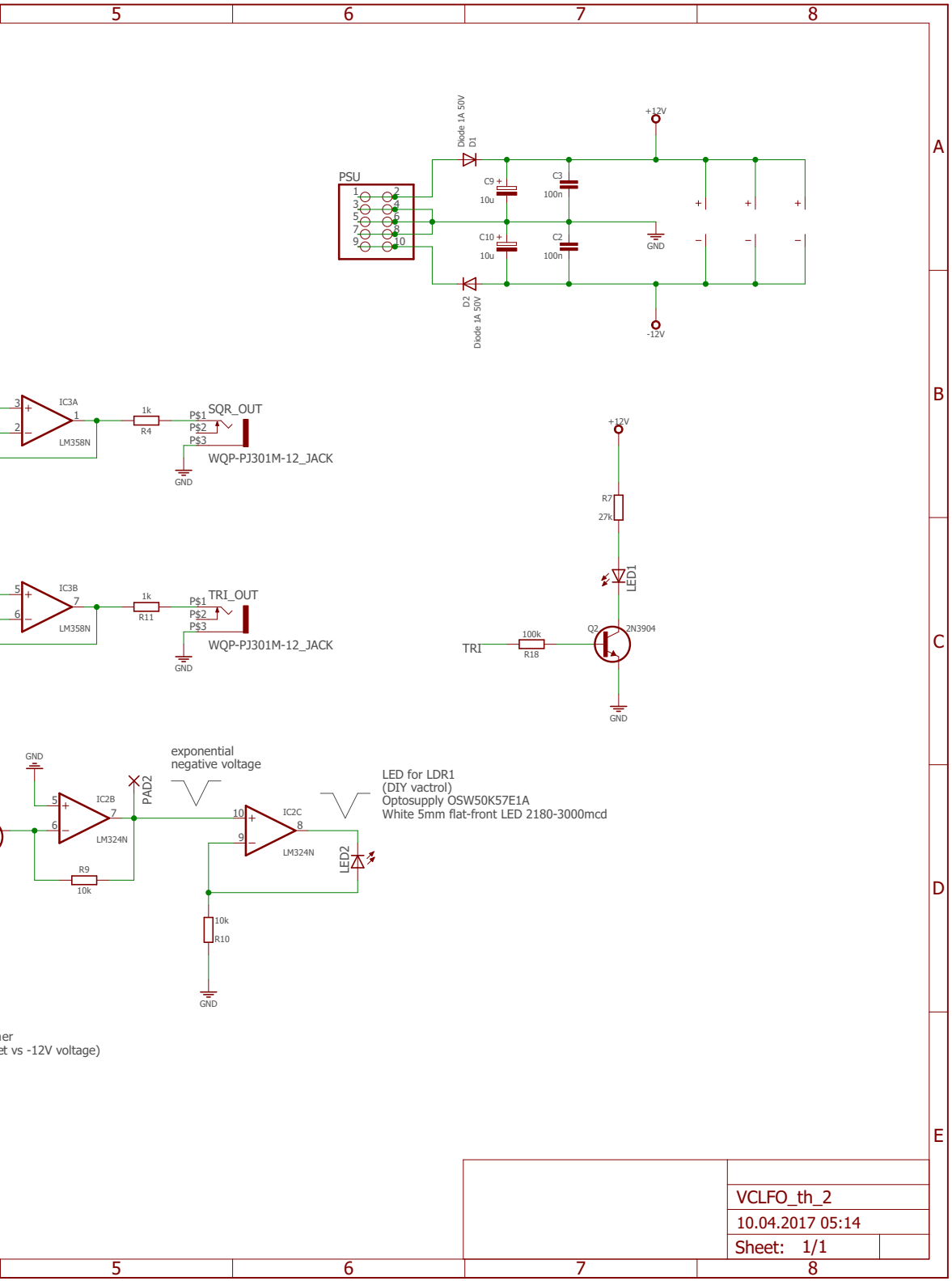
PSU
Diode 1A 50V
D1
D2
C9
10u
C10
10u
C3
100n
C2
100n
+12V
-12V
GND
IC3A
LM358N
R4
1k
SQR_OUT
WQP-PJ301M-12_JACK
IC3B
LM358N
R11
1k
TRI_OUT
WQP-PJ301M-12_JACK
R7
27k
LED1
Q2
2N3904
TRI
R18
100k
IC2B
LM324N
PAD2
R9
10k
exponential
negative voltage
IC2C
LM324N
LED2
LED for LDR1
(DIY vactrol)
Optosupply OSW50K57E1A
White 5mm flat-front LED 2180-3000mcd
R10
10k
VCLFO_th_2
10.04.2017 05:14
Sheet: 1/1