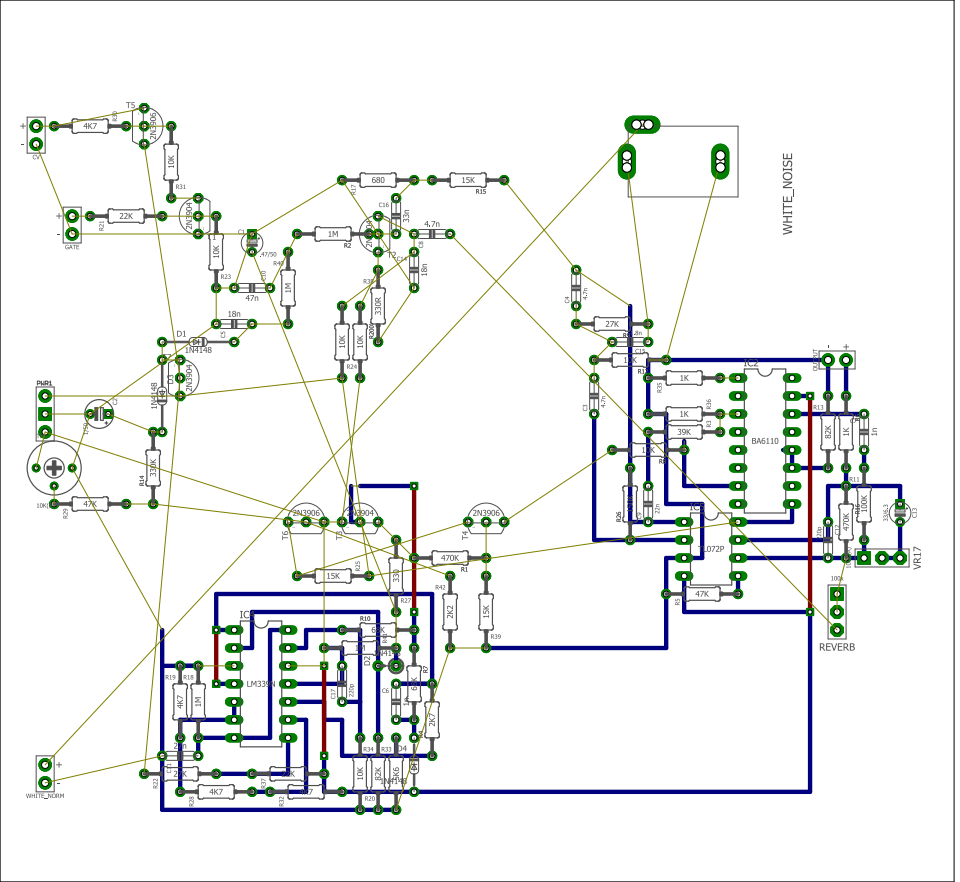
WHITE_NOISE
REVERB
VR17
BA6110
LM339N
LM324P
2N3906
2N3904
BR1M1
WHITE_NORM
GATE
PWR

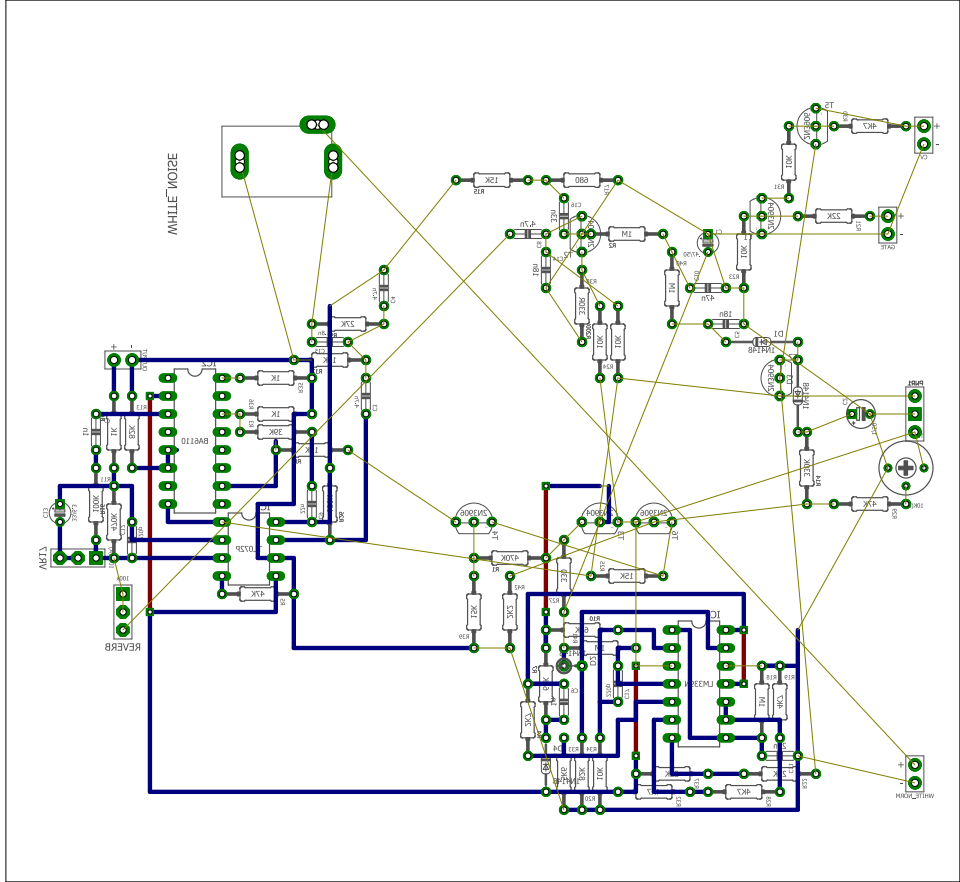
WHITE_NOISE
REVERB
VR17
BA6110
LM339N
LM324P
2N3906
2N3904
BR1M1
WHITE_NORM
GATE
PWR