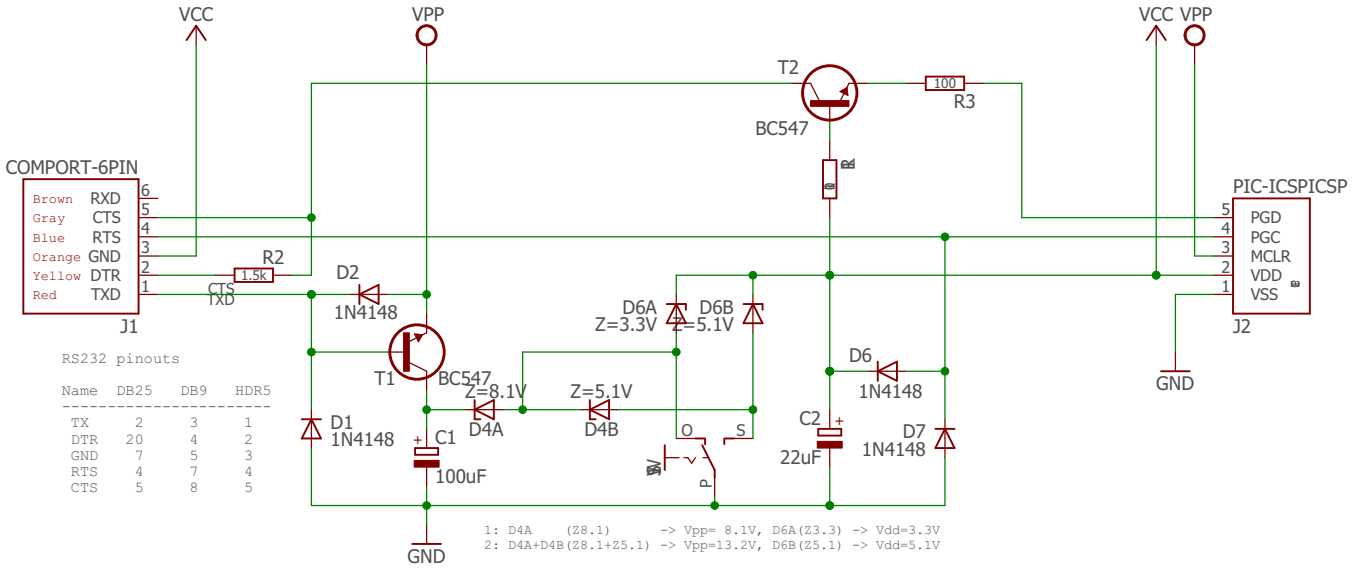

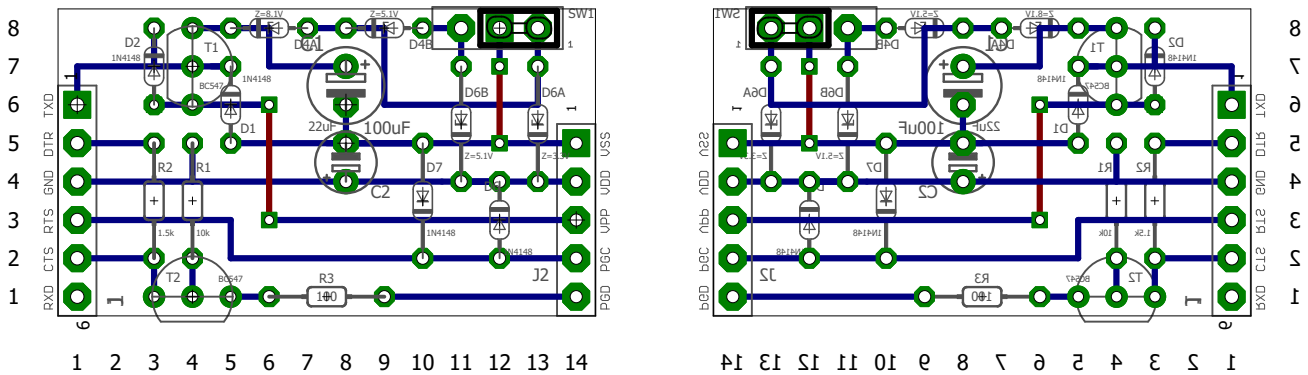

\Sources\pictest\eagle\JDM2_2voltage_jmpcom-z.brd