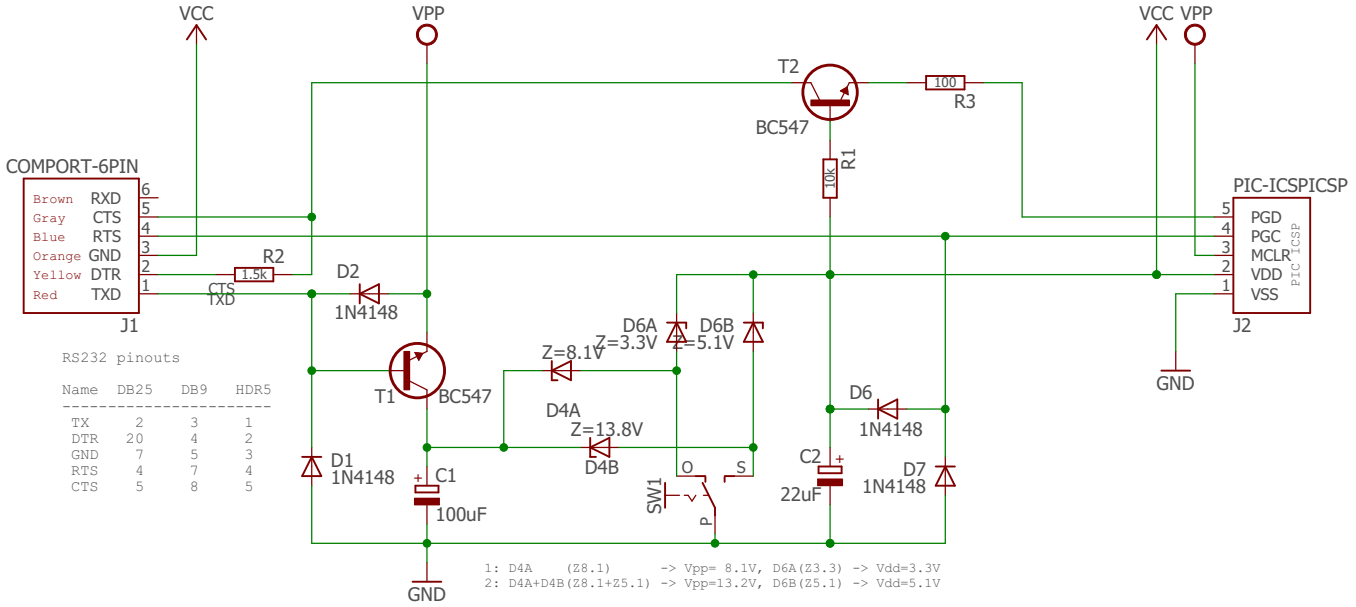
VCC
VPP
VCC VPP
T2
BC547
100
R3
R1
10k
COMPORT-6PIN
Brown RXD
Gray CTS
Blue RTS
Orange GND
Yellow DTR
Red TXD
J1
R2
1.5k
CTS
TXD
D2
1N4148
T1
BC547
Z=8.1V
D6A
Z=3.3V
D6B
Z=5.1V
D4A
Z=13.8V
D4B
D6
1N4148
D1
1N4148
C1
100uF
SW1
O
S
P
C2
22uF
D7
1N4148
PIC-ICSPICSP
PGD
PGC
MCLR
VDD
VSS
J2
GND
GND
RS232 pinouts
Name DB25 DB9 HDR5
TX 2 3 1
DTR 20 4 2
GND 7 5 3
RTS 4 7 4
CTS 5 8 5
1: D4A (Z8.1) -> Vpp= 8.1V, D6A(Z3.3) -> Vdd=3.3V
2: D4A+D4B(Z8.1+Z5.1) -> Vpp=13.2V, D6B(Z5.1) -> Vdd=5.1V

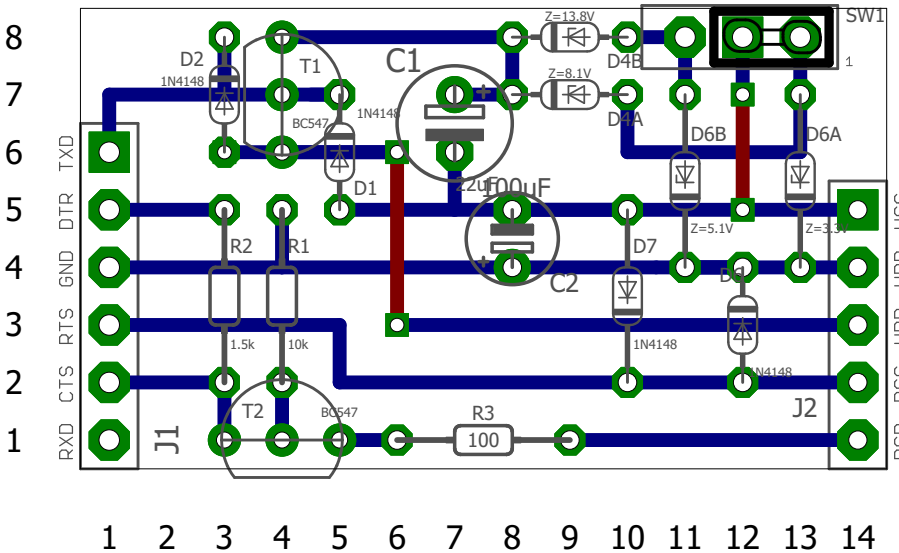
8
7
6
5
4
3
2
1
TXD
DTR
GND
RTS
CTS
RXD
J1
D2
1N4148
T1
BC547
1N4148
D1
C1
220uF
Z=13.8V
Z=8.1V
D4B
D4A
SW1
1
D6B
D6A
Z=5.1V
Z=3.3V
R2
R1
1.5k
10k
T2
BC547
R3
100
D7
1N4148
D5
1N4148
C2
1000uF
J2
VSS
VDD
VPP
PGC
PGD
1 2 3 4 5 6 7 8 9 10 11 12 13 14

1 2 3 4 5 6 7 8 9 10 11 12 13 14
1 2 3 4 5 6 7 8
J1
J2
SWI
C1
C2
R1
R2
R3
T1
T2
D1
D2
D6A
D6B
D7
DXT
DXR
DTR
DSR
RTS
CTS
GND
VDD
SSV
DSV
1.5K
10K
100
BC547
1N4148
2uF
100uF