Computer Network Overview

Introduction to Cybersecurity - MNG

Rahul Shandilya

GLA University

2026-04-29

A Day in the Life of a Web Page Request

A Day in the Life of a Web Page Request

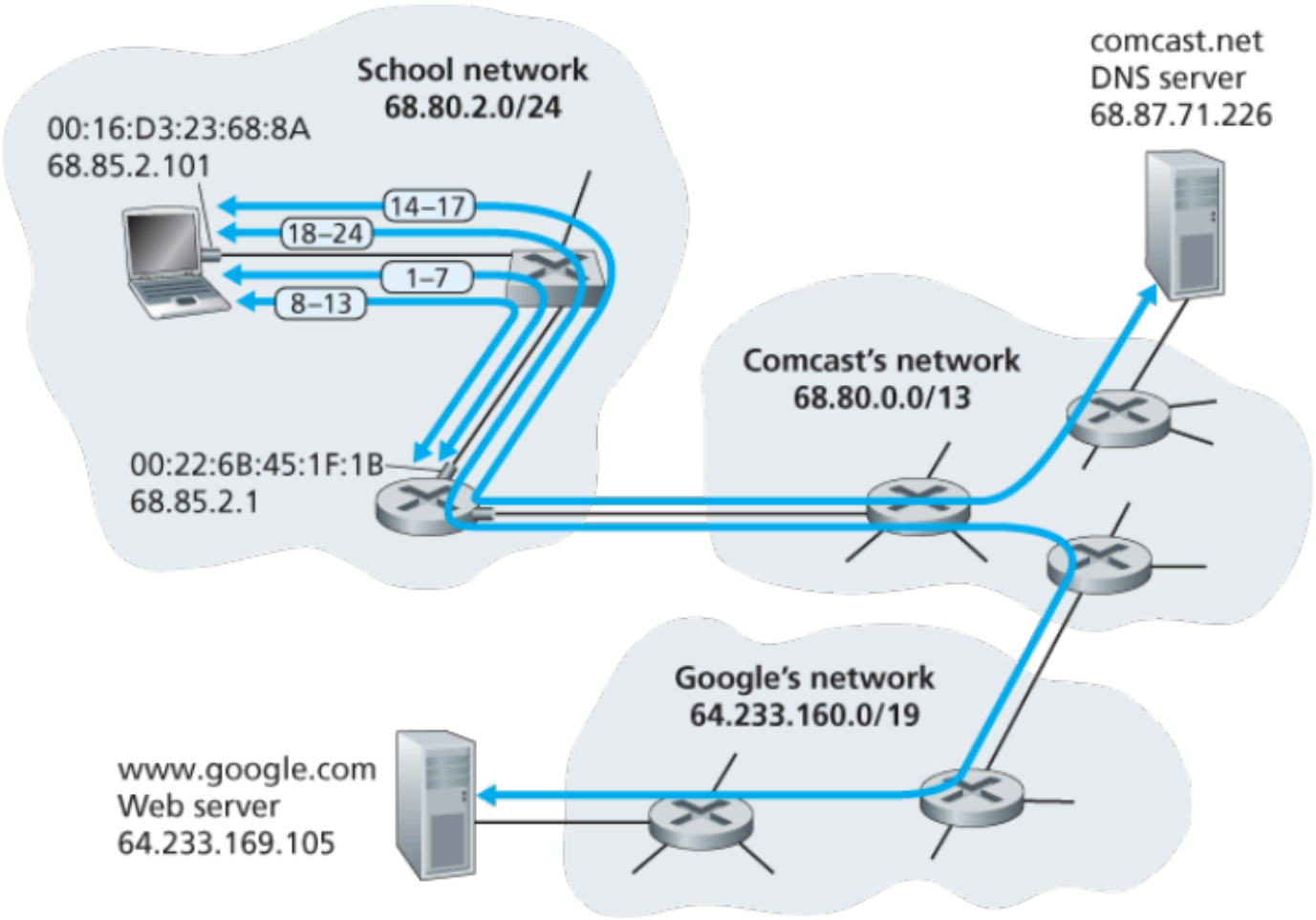

1. The operating system on Bob's laptop creates a DHCP request message and puts this message within a UDP segment with destination port 67 (DHCP server) and source port 68 (DHCP client). The UDP segment is then placed within an IP datagram with a broadcast IP destination address (255.255.255.255) and a source IP address of 0.0.0.0, since Bob's laptop doesn't yet have an IP address.

2. The IP datagram containing the DHCP request message is then placed within an Ethernet frame. The Ethernet frame has a destination MAC addresses of FF:FF:FF:FF:FF:FF so that the frame will be broadcast to all devices connected to the switch (hopefully including a DHCP server); the frame's source MAC address is that of Bob's laptop, 00:16:D3:23:68:8A.

3. The broadcast Ethernet frame containing the DHCP request is the first frame sent by Bob's laptop to the Ethernet switch. The switch broadcasts the incoming frame on all outgoing ports, including the port connected to the router.

4. The router receives the broadcast Ethernet frame containing the DHCP request on its interface with MAC address 00:22:6B:45:1F:1B and the IP datagram is extracted from the Ethernet frame. The datagram's broadcast IP destination address indicates that this IP datagram should be processed by upper layer protocols at this node, so the datagram's payload (a UDP segment) isthus demultiplexed up to UDP, and the DHCP request message is extracted from the UDP segment. The DHCP server now has the DHCP request message.

5. Let's suppose that the DHCP server running within the router can allocate IP addresses in the CIDR block 68.85.2.0/24. In this example, all IP addresses used within the school are thus within Comcast's address block. Let's suppose the DHCP server allocates address 68.85.2.101 to Bob's laptop. The DHCP server creates a DHCP ACK message containing this IP address, as well as the IP address of the DNS server (68.87.71.226), the IP address for the default gateway router (68.85.2.1), and the subnet block (68.85.2.0/24) (equivalently, the "network mask"). The DHCP message is put inside a UDP segment, which is put inside an IP datagram, which is put inside an Ethernet frame. The Ethernet frame has a source MAC address of the

router's interface to the home network (00:22:6B:45:1F:1B) and a destination MAC address of Bob's laptop (00:16:D3:23:68:8A).

6. The Ethernet frame containing the DHCP ACK is sent (unicast) by the router to the switch. Because the switch is self-learning (Section 6.4.3) and previously received an Ethernet frame (containing the DHCP request) from Bob's laptop, the switch knows to forward a frame addressed to 00:16:D3:23:68:8A only to the output port leading to Bob's laptop.

7. Bob's laptop receives the Ethernet frame containing the DHCP ACK, extracts the IP datagram from the Ethernet frame, extracts the UDP segment from the IP datagram, and extracts the DHCP ACK message

from the UDP segment. Bob's DHCP client then records its IP address and the IP address of its DNS server. It also installs the address of the default gateway into its IP forwarding table. Bob's laptop will send all datagrams with destination address outside of its subnet 68.85.2.0/24 to the default gateway. At this point, Bob's laptop has initialized its networking components and is ready to begin processing the Web page fetch.

Still Getting Started: DNS and ARP

When Bob types the URL for www.google.com into his Web browser, he begins the long chain of events that will eventually result in Google's home page being displayed by his Web browser. Bob's Web browser

begins the process by creating a TCP socket that will be used to send the HTTP request to www.google.com. In order to create the socket, Bob's laptop will need to know the IP address of www.google.com. The DNSprotocol is used to provide this name-to-IP-address translation service.

8. The operating system on Bob's laptop thus creates a DNS query message , putting the string "www.google.com" in the question section of the DNS message. This DNS message is then placed within a UDP segment with a destination port of 53 (DNS server). The UDP segment is then placed within an IP datagram with an IP destination address of68.87.71.226 (the address of the DNS server

returned in the DHCP ACK in step 5) and a source IP address of 68.85.2.101.

9. Bob's laptop then places the datagram containing the DNS query message in an Ethernet frame. This frame will be sent (addressed, at the link layer) to the gateway router in Bob's school's network. However, even though Bob's laptop knows the IP address of the school's gateway router (68.85.2.1) via the DHCP ACK message in step 5 above, it doesn't know the gateway router's MAC address. In order to obtain the MAC address of the gateway router, Bob'slaptop will need to use the ARP protocol

10. Bob's laptop creates an ARP query message with a target IP address of 68.85.2.1 (the default gateway), places the ARP message within an Ethernet frame with a broadcast destination address (FF:FF:FF:FF:FF:FF) and sends the Ethernet frame to the switch, which delivers the frame to all connected devices, including the gateway router.

11. The gateway router receives the frame containing the ARP query message on the interface to the school network, and finds that the target IP address of 68.85.2.1 in the ARP message matches the IP address of its interface. The gateway router thus prepares an ARP reply, indicating that its MAC address of 00:22:6B:45:1F:1B corresponds to IP address 68.85.2.1. It places the ARP reply message

in an Ethernet frame, with a destination address of 00:16:D3:23:68:8A (Bob's laptop) and sends the frame to the switch, which delivers the frame to Bob's laptop.

12. Bob's laptop receives the frame containing the ARP reply message and extracts the MAC address of the gateway router (00:22:6B:45:1F:1B) from the ARP reply message.

13. Bob's laptop can now (finally!) address the Ethernet frame containing the DNS query to the gateway router's MAC address. Note that the IP datagram in this frame has an IP destination address of 68.87.71.226 (the DNS server), while the frame has a destination address of 00:22:6B:45:1F:1B (the gateway router). Bob's

laptop sends this frame to the switch, which delivers the frame to the gateway router.

Still Getting Started: Intra-Domain Routing to the DNS Server

14. The gateway router receives the frame and extracts the IP datagram containing the DNS query. The router looks up the destination address of this datagram (68.87.71.226) and determines from its forwarding table that the datagram should be sent to the leftmost router in the Comcast network in the Figure. The IP datagram is placed inside a link-layer frame appropriate for the link connecting the school's router to the leftmost Comcast router and the frame is sent over this link.

15. The leftmost router in the Comcast network receives the frame, extracts the IP datagram, examines the datagram's destination address (68.87.71.226) and determines the outgoing interface on which to forward the datagram toward the DNS server from its forwarding table, which has been filled in byComcast's intra-domain protocol (such as RIP, OSPF or IS-IS,) as well as the Internet's inter-domain protocol, BGP.

16. Eventually the IP datagram containing the DNS query arrives at the DNS server. The DNS server extracts the DNS query message, looks up the name www.google.com in its DNS database , and finds the DNS resource record that contains the IP address (64.233.169.105) for www.google.com. (assuming that it is currently cached in the

DNS server). Recall that this cached data originated in the authoritative DNS server for googlecom. The DNS server forms a DNS reply message containing this hostname-to-IPaddress mapping, and places the DNS reply message in a UDP segment, and the segment within an IP datagram addressed to Bob's laptop (68.85.2.101). This datagram will be forwarded back through the Comcast network to the school's router and from there, via the Ethernet switch to Bob's laptop.

17. Bob's laptop extracts the IP address of the server www.google.com from the DNS message. Finally, after a lot of work, Bob's laptop is now ready to contact the www.google.com server!

Web Client-Server Interaction: TCP and HTTP

18. Now that Bob's laptop has the IP address of www.google.com, it can create the TCP socket that will be used to send the HTTP GET message to www.google.com. When Bob creates the TCP socket, the TCP in Bob's laptop must first perform a three-way handshake with the TCP in www.google.com. Bob's laptop thus first creates a TCP SYN segment with destination port 80 (for HTTP), places the TCP segment inside an IP datagram with a destination IP address of 64.233.169.105 (www.google.com), places the datagram inside a frame with a destination MAC address of 00:22:6B:45:1F:1B (the gateway router) and sends the frame to the switch.

19. The routers in the school network, Comcast's network, and Google's network forward the datagram containing the TCP SYN toward `www.google.com`, using the forwarding table in each router, as in steps 14–16 above. Recall that the router forwarding table entries governing forwarding of packets over the inter-domain link between the Comcast and Google networks are determined by the BGP protocol.

20. Eventually, the datagram containing the TCP SYN arrives at www.google.com. The TCP SYN message is extracted from the datagram and demultiplexed to the welcome socket associated with port 80. A connection socket is created for the TCP connection between the Google HTTP server and Bob's laptop. A TCP SYNACK segment is

generated, placed inside a datagram addressed to Bob's laptop, and finally placed inside a link-layer frame appropriate for the link connecting www.google.com to its first-hop router.

21. The datagram containing the TCP SYNACK segment is forwarded through the Google, Comcast, and school networks, eventually arriving at the Ethernet card in Bob's laptop. The datagram is demultiplexed within the operating system to the TCP socket created in step 18, which enters the connected state.

22. With the socket on Bob's laptop now (finally!) ready to send bytes to www.google.com, Bob's browser creates the HTTP GET message containing the URL to be fetched. The HTTP GET message is then

written into the socket, with the GET message becoming the payload of a TCP segment. The TCP segment is placed in a datagram and sent and delivered to www.google.com as in steps 18–20 above.

23. The HTTP server at www.google.com reads the HTTP GET message from the TCP socket, creates an HTTP response message, places the requested Web page content in the body of the HTTP response message, and sends the message into the TCP socket.

24. The datagram containing the HTTP reply message is forwarded through the Google, Comcast, and school networks, and arrives at Bob's laptop. Bob's Web browser program reads the HTTP response

from the socket, extracts the html for the Web page from the body of the HTTP response, and finally (finally!) displays the Web page.

Network Attack Example - ARP Spoofing

ARP Spoofing (ARP Poisoning) is a **network attack** where an attacker sends fake ARP messages inside a local network to associate their **MAC address** with the **IP address of another device** (usually the gateway/router). This allows the attacker to intercept, modify, or block network traffic.

Background: What is ARP?

ARP (Address Resolution Protocol) maps:

```
IP Address → MAC Address
```

inside a local network (LAN).

Example:

```
| Device    | IP Address   | MAC Address |
| --------- | ------------ | ----------- |
| Victim PC | 192.168.1.10 | AA:AA:AA:AA |
| Router    | 192.168.1.1  | RR:RR:RR:RR |
```

When the victim wants to send data to the router:

1. Victim broadcasts:

   ```
   Who has 192.168.1.1 ?
   ```

2. Router replies:

   ```
   192.168.1.1 is at RR:RR:RR:RR
   ```

3. Victim stores this in **ARP cache**.

Key Weakness in ARP

ARP has **no authentication**.

Any device can send ARP replies — even if nobody asked.

Devices **trust** received ARP messages blindly.

This is the core vulnerability exploited in ARP spoofing.

3. Goal of ARP Spoofing

The attacker tries to make:

```
Victim believes → Attacker = Router
Router believes → Attacker = Victim
```

So traffic flows through attacker.

This creates a **Man-in-the-Middle (MITM)** situation.

Step-by-Step Attack Process

Step 1 — Attacker joins the same LAN

Attacker must be in the same local network:

- Same WiFi
- Same switch
- Same subnet

Example:

```
| Device   | IP           |
| -------- | ------------ |
| Victim   | 192.168.1.10 |
| Router   | 192.168.1.1  |
| Attacker | 192.168.1.50 |
```

Step-by-Step Attack Process

Step 2 — Attacker sends fake ARP reply to Victim

Attacker sends:

```
192.168.1.1 is at ATTACKER_MAC
```

(Victim thinks attacker is router)

Victim updates ARP cache:

```
Router IP → Attacker MAC
```

Step 3 — Attacker sends fake ARP reply to Router

Attacker also sends:

```
192.168.1.10 is at ATTACKER_MAC
```

Router updates cache:

```
Victim IP → Attacker MAC
```

Step-by-Step Attack Process

Step 4 — Traffic Redirection

Now communication path becomes:

```
Victim → Attacker → Router
Router → Attacker → Victim
```

Attacker sits in the middle.

5. What Attacker Can Do

Once positioned as MITM:

Packet Sniffing

- Capture passwords
- Cookies
- Session tokens
- Unencrypted HTTP traffic

Data Modification

- Inject malware
- Change downloads
- Modify web pages

5. What Attacker Can Do

✅ Session Hijacking

- Steal login sessions

✅ Denial of Service

- Drop packets instead of forwarding

6. Simple Diagram

```
Before Attack:
Victim -------- Router

After ARP Spoofing:
Victim ---- Attacker ---- Router
```

Tools Commonly Used (Educational Purpose)

Attackers typically use tools like:

- Ettercap
- Bettercap
- dsniff
- arpspoof (Linux)
- Cain & Abel (Windows)

(Used legally for penetration testing and research.)

Example ARP Cache Poisoning (Conceptual)

Victim ARP Table:

```
IP                MAC
192.168.1.1  →  AA:BB:CC:DD  (Attacker)
```

Router ARP Table:

```
192.168.1.10 → AA:BB:CC:DD  (Attacker)
```

Why It Works

ARP spoofing succeeds because:

- ARP is **stateless**
- No authentication
- Accepts unsolicited replies
- Automatically updates cache

10. Detection Methods

Indicators:

- Duplicate MAC addresses
- Frequent ARP updates
- Network slowdown
- SSL warnings

Tools:

- arpwatch
- Wireshark
- XArp

11. Prevention Techniques

Network Level

- Dynamic ARP Inspection (DAI)
- Port security on switches
- VLAN segmentation

Host Level

- Static ARP entries
- VPN usage
- HTTPS encryption

Monitoring

- IDS/IPS systems

12. Summary (Quick View)


```
| Step | Action                      |
| ---- | --------------------------- |
| 1    | Attacker joins LAN          |
| 2    | Sends fake ARP replies      |
| 3    | Poison ARP cache            |
| 4    | Becomes Man-in-the-Middle   |
| 5    | Intercept/modify traffic    |
```