REVISIONS				
ZONE	REV.	DESCRIPTION	DATE	APPROVED
B2	A	ECO 32510 RELEASE TO MANUFACTURINGB1	3/23/2016	DCP

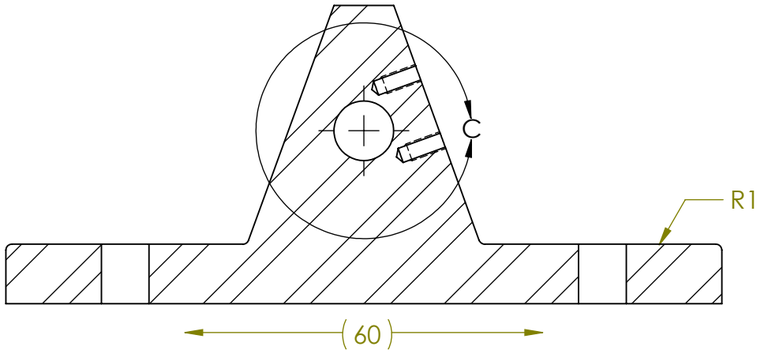

SECTION B-B

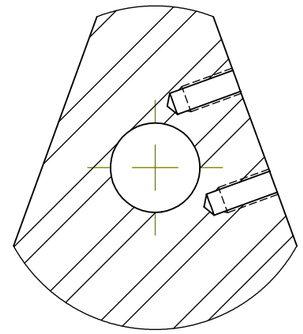

DETAIL C
SCALE 3 : 2

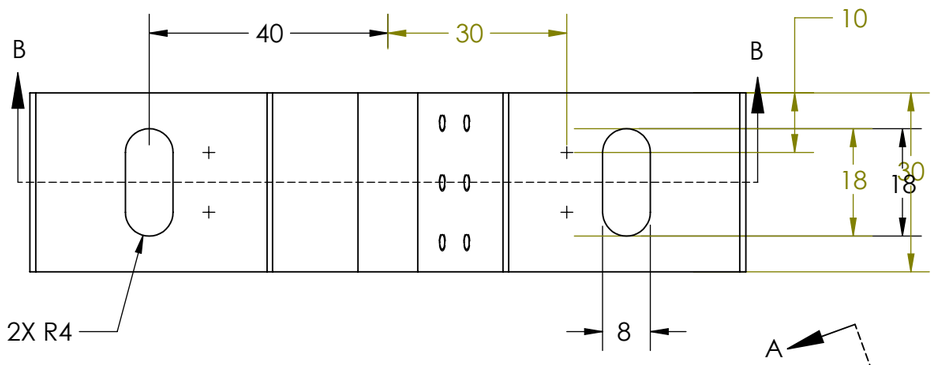

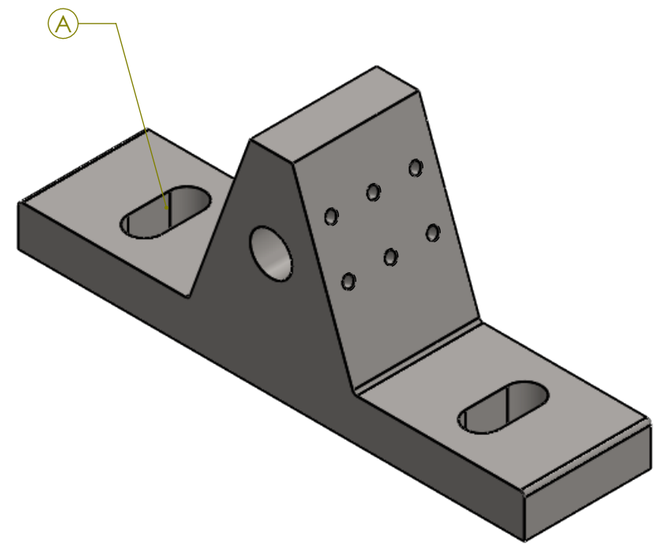

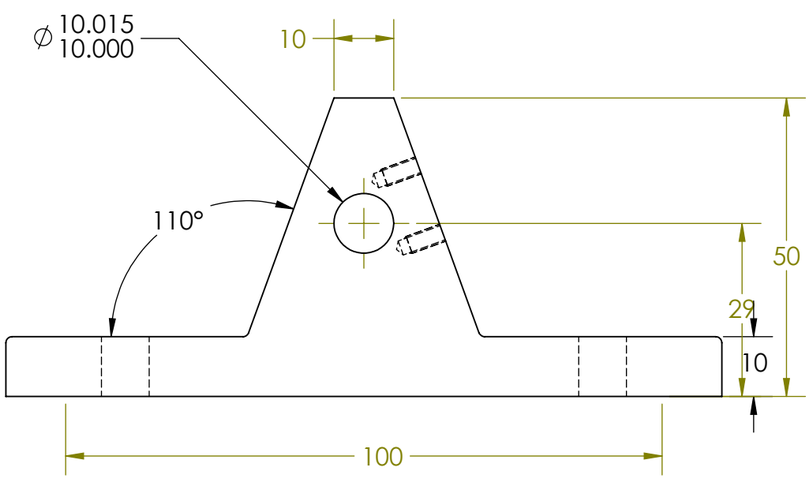

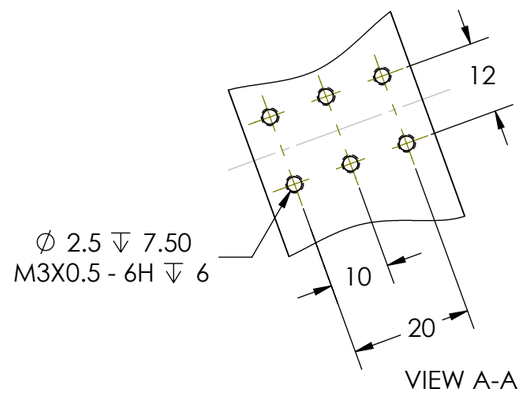

VIEW A-A

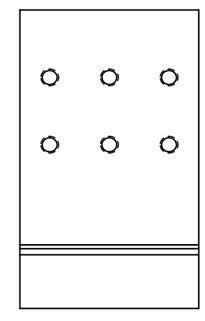

1. ALL ROUNDS R1 MM
2. REMOVE ALL BURRS

D&M Engineering

PROPRIETARY AND CONFIDENTIAL

THE INFORMATION CONTAINED IN THIS DRAWING IS THE SOLE PROPERTY OF <INSERT COMPANY NAME HERE>. ANY REPRODUCTION IN PART OR AS A WHOLE WITHOUT THE WRITTEN PERMISSION OF <INSERT COMPANY NAME HERE> IS PROHIBITED.

NEXT ASSY	USED ON
APPLICATION	

UNLESS OTHERWISE SPECIFIED:

DIMENSIONS ARE IN MILLIMETERS
TOLERANCES:
ANGULAR: MACH ± 0°30'
ONE PLACE DECIMAL ±0.5
TWO PLACE DECIMAL ±-0.15

INTERPRET GEOMETRIC TOLERANCING PER: ASME Y14.5

MATERIAL

FINISH μm

DO NOT SCALE DRAWING

	NAME	DATE
DRAWN	TRW	3/22/16
CHECKED		
ENG APPR.		
MFG APPR.		
Q.A.		

COMMENTS:

D&M Engineering

TITLE: 2-1

SIZE	DWG. NO.	REV
B	56-22222	A

SCALE: 1:1 | WEIGHT: | SHEET 1 OF 1

SOLIDWORKS Educational Product. For Instructional Use Only.