深圳市金逸晨电子有限公司

ShenZhen GoldenMorning Electronic Co.,Ltd

PRODUCT SPECIFICATION

Model No	**T190X7-C30-01-TAA**
Product Name	**1.9 TFT LCD Module**
Version	**V1**
Date	**2025-12-12**

☐ Preliminary Specification
☑ Final Specification

PREPARED BY	CHECKED BY	APPROVED BY

Revision History

Version	Date	Page	Revise record	Remarks
V1	2025-12-12	-	First issued	-

TABLE OF CONTENT

NO.Contents **Page**

1. General Parameter 4
2. Physical drawing 4
3. Mechanical Dimension 5
4. Absolute Maximum Ratings 6
5. DC Characteristics 6
6. Backlight Characteristic 6
7. Pins Definitions 7
8. Schematic Diagram 8
9. Timing Characteristics 10
10. Optical Characteristics 13
11. Reliability 15
12. Precautions 16

1. General Parameter

NO.	Features	Details	Unit
1	Display Size(Diagonal)	1.9”	Inch
2	LCD type	IPS TFT	-
3	Display Mode	Normally black	-
4	Resolution	170 RGB(H) x 320(V)	Pixels
5	Viewing Direction	ALL	-
6	Module size	25.80(W) x 49.72(H) x 1.43(T)	mm
7	Active Area	22.7(W) x 42.72(H)	mm
8	Pixel Size	0.1335(W) x 0.1335(H)	mm
9	Color arrangement	RGB Vertical stripe	-
10	Interface	4-Line SPI / 80-8bit parallel	-
11	Display Colors	262K	-
12	Driver IC	ST7789	-
13	With or Without Touch Panel	Without	-
14	Operating Temperature	-20℃~70℃	℃
15	Storage Temperature	-30℃~80℃	℃
16	Weight	2.79	g

Note 1: Please refer to the mechanical drawing.

2. Physical drawing

3. Mechanical Dimension

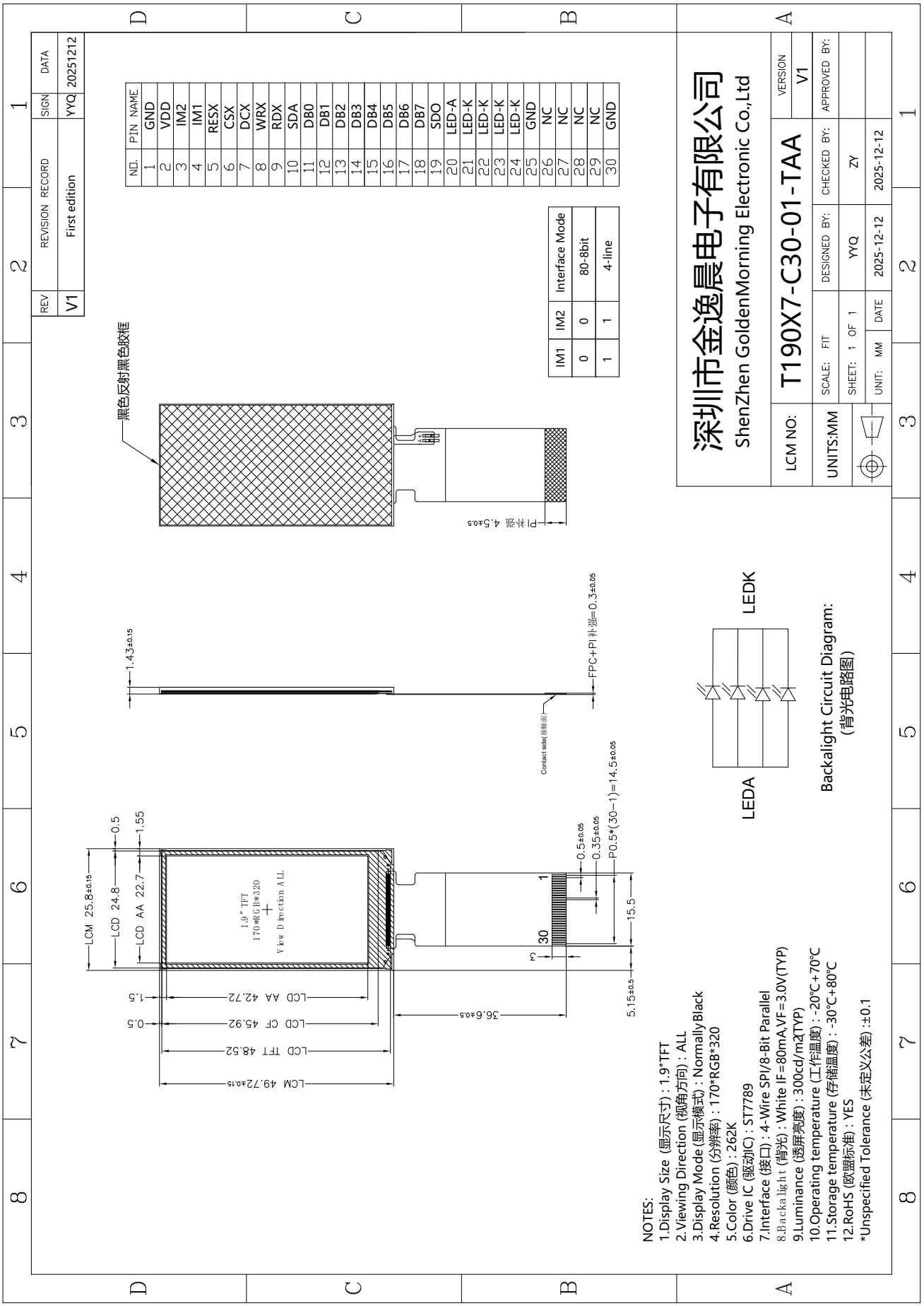

4. Absolute Maximum Ratings

Item	Symbol	Min.	Max.	Unit
Analog Supply Voltage	VDD	-0.3	4.6	V
Operating temperature	Top	-20	70	℃
Storage temperature	Tst	-30	80	℃

Note 1: If Ambient temperature below 50ºC, the maximal humidity is 90%RH, if Ambient temperature over 50ºC, absolute humidity should be less than 60%RH.

Note 2: The response time will be extremely slow when the operating temperature is around -10℃, and the back ground will become darker at high temperature operating.

Note 3: If one of the above items is exceeded its maximum limitation momentarily, the quality of the product may be degraded. Absolute maximum limitation, therefore, specify the values exceeding which the product may be physically damaged. Be sure to use the product within the recommend range.

5. DC Characteristics

Item	Symbol	Min.	Typ.	Max.	Unit
Analog Supply Voltage	VDD	2.5	2.75	3.3	V
Input high voltage	V_{IN}	0.7*IOVCC	-	IOVCC	V
Input low voltage	V_{IL}	GND	-	0.3*IOVCC	V
Output high voltage	V_{OH}	0.8*IOVCC	-	IOVCC	V
Output low voltage	V_{OL}	GND	-	0.2*IOVCC	V
Input Current	I_{IN}	-	20	-	mA

6. Backlight Characteristic

Item	Symbol	Min.	Typ.	Max.	Unit	Condition
Forward Voltage	V_F	-	3.0	-	V	-
Forward Current	I_F	-	80	-	mA	-
Power dissipation	Pd	-	240	-	mW	-
LED Life Time(25 ºC)	-	-	10000	-	Hrs	-

Note: LED life time defined as follows: The final brightness is at 50% of original brightness.Typical operating life time is estimated data.

7. Pins Definitions

Pin.No	Symbol	Description
1	GND	Ground.
2	VDD	Power supply
3	IM2	The MCU interface mode select: IM1,IM2=Low 80-8bit parallel. IM1,IM2=High 4-Line 8bit.
4	IM1	
5	RESX	This signal will reset the device and it must be applied to properly initialize the chip. -Signal is active low
6	CSX	Chip selection pin, Low enable, High disable.
7	DCX	-Display data/command selection pin in parallel interface. -This pin is used to be serial interface clock.(SCL) DCX=’1’: display data or parameter. DCX=’0’: command data.
8	WRX	-Write enable in MCU parallel interface. - Display data/command selection pin in 4-line serial interface.
9	RDX	Read enable in 8080 MCU parallel interface.
10	SDA	SPI interface input pin
11-18	DB0-DB7	MCU parallel interface data bus.
19	SDO	SPI interface output pin
20	LED-A	Backlight anode
21-24	LED-K	Backlight cathode
25	GND	Ground.
26-29	NC	No connect
30	GND	Ground.

Note: The backlight LED is recommended to be powered independently by constant current drive.

8. Schematic Diagram

80-8bit 并口参考原理

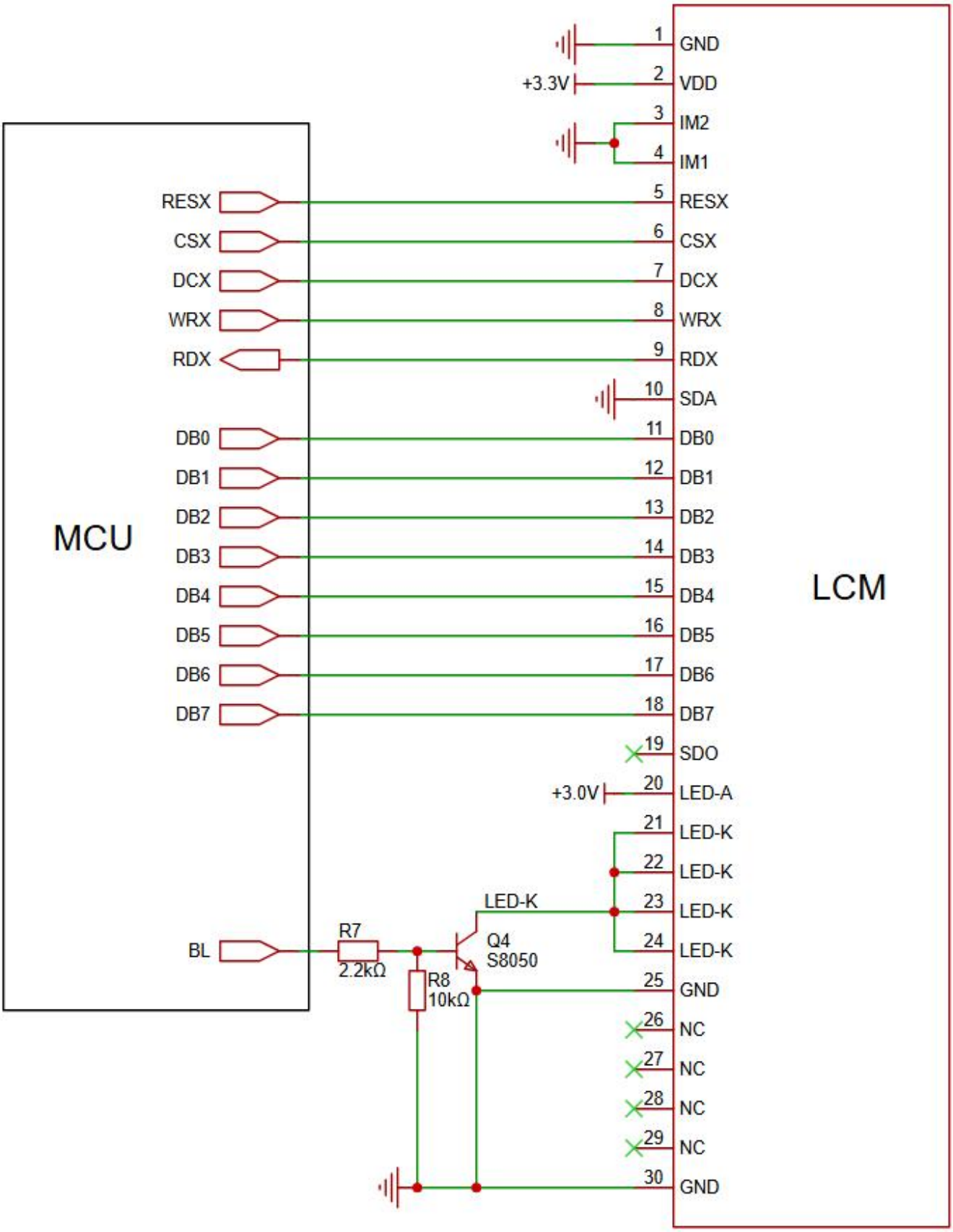

4-Line SPI 参考原理

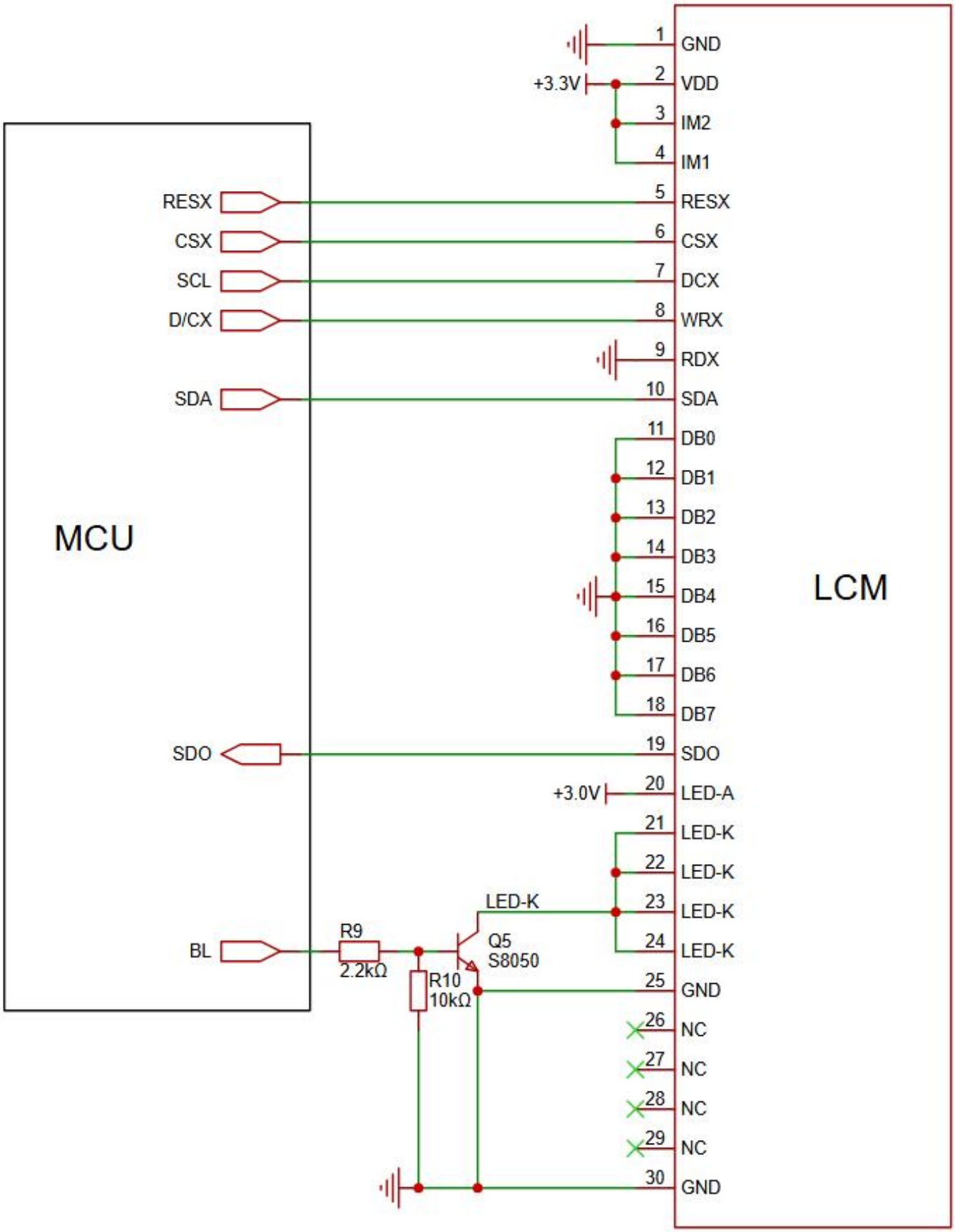

9. Timing Characteristics

4-Line serial Interface Timing Characteristics

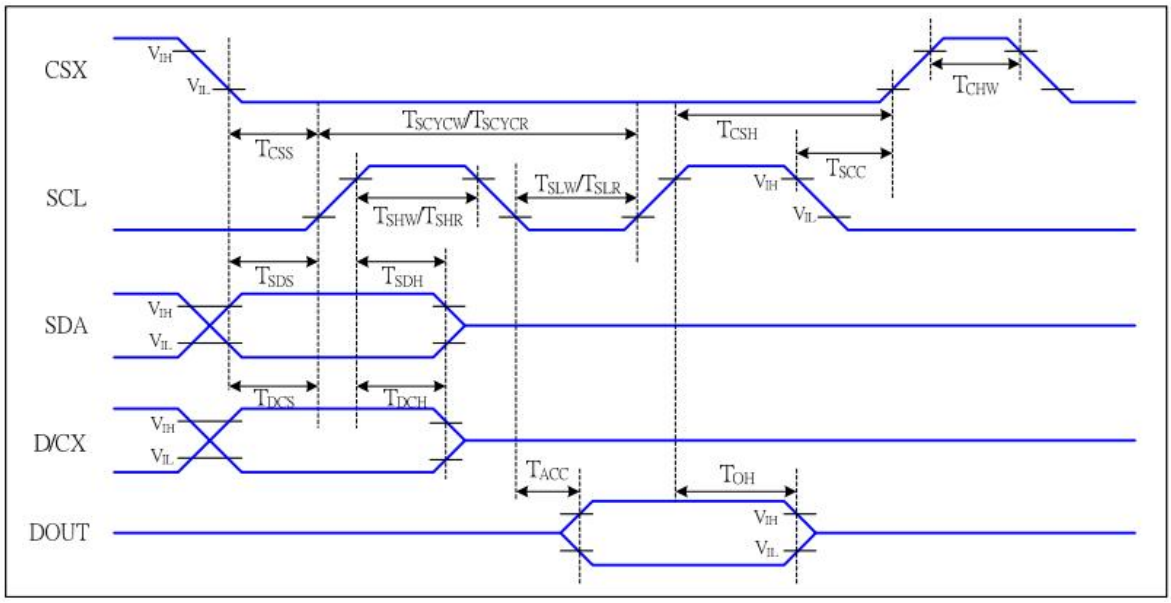

VDDI=1.65 to 3.3V, VDD=2.4 to 3.3V, AGND=DGND=0V, Ta=25℃

Signal	Symbol	Parameter	MIN	MAX	Unit	Description
CSX	T_{CSS}	Chip select setup time (write)	15		ns	
	T_{CSH}	Chip select hold time (write)	15		ns	
	T_{CSS}	Chip select setup time (read)	60		ns	
	T_{SCC}	Chip select hold time (read)	65		ns	
	T_{CHW}	Chip select “H” pulse width	40		ns	
SCL	T_{SCYCW}	Serial clock cycle (Write)	16		ns	-write command & data ram
	T_{SHW}	SCL “H” pulse width (Write)	7		ns	
	T_{SLW}	SCL “L” pulse width (Write)	7		ns	
	T_{SCYCR}	Serial clock cycle (Read)	150		ns	-read command & data ram
	T_{SHR}	SCL “H” pulse width (Read)	60		ns	
	T_{SLR}	SCL “L” pulse width (Read)	60		ns	
D/CX	T_{DCS}	D/CX setup time	10		ns	
	T_{DCH}	D/CX hold time	10		ns	
SDA (DIN)	T_{SDS}	Data setup time	7		ns	
	T_{SDH}	Data hold time	7		ns	
DOUT	T_{ACC}	Access time	10	50	ns	For maximum CL=30pF For minimum CL=8pF
	T_{OH}	Output disable time	15	50	ns	

4-Line serial Interface Characteristics

8080 Series MCU Parallel Interface Characteristics: 8-bit Bus

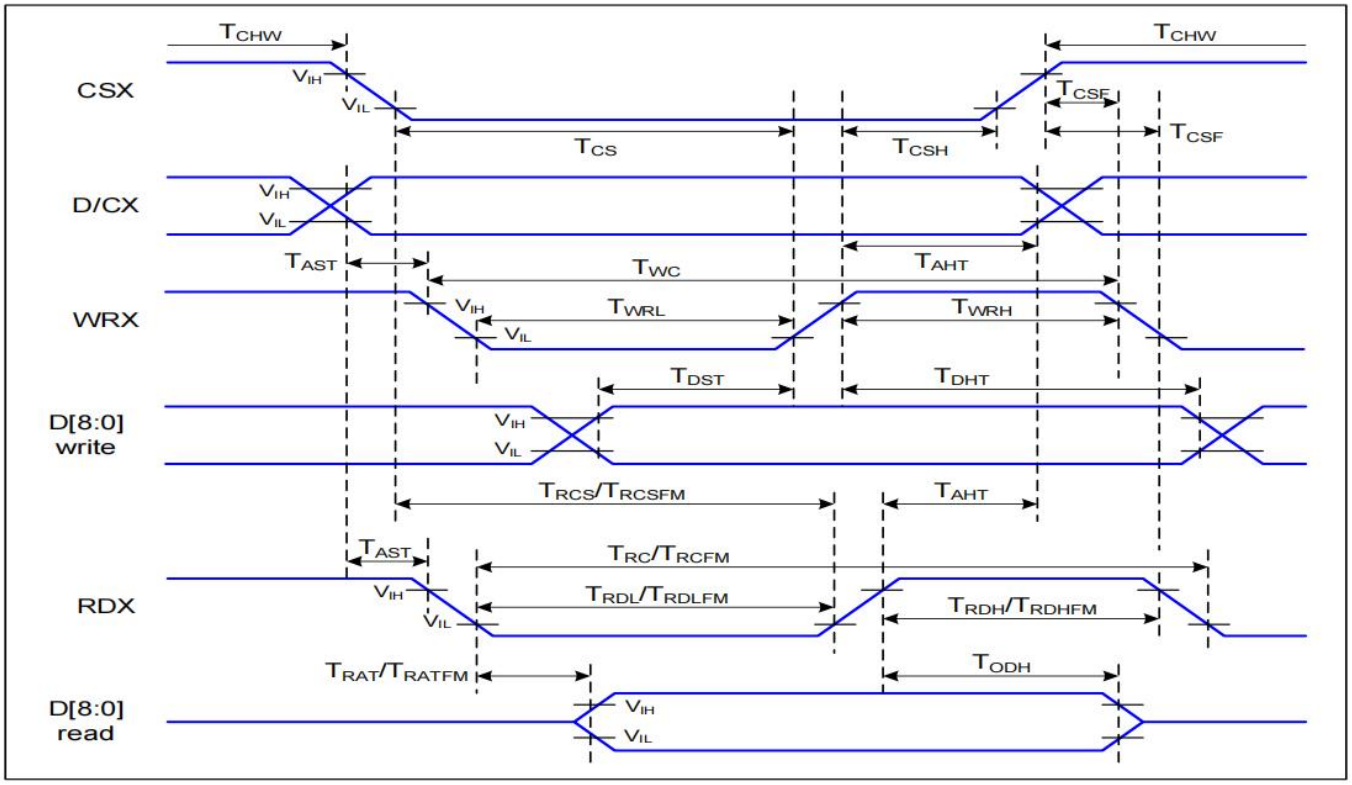

Rising and Falling Timing for I/O Signal

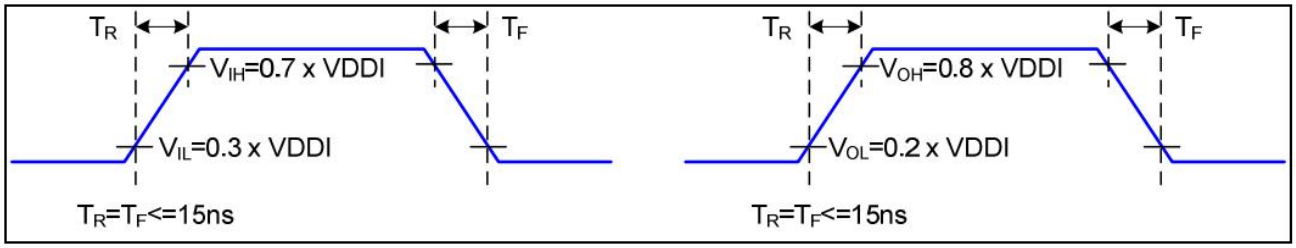

Write-to-Read and Read-to-Write Timing

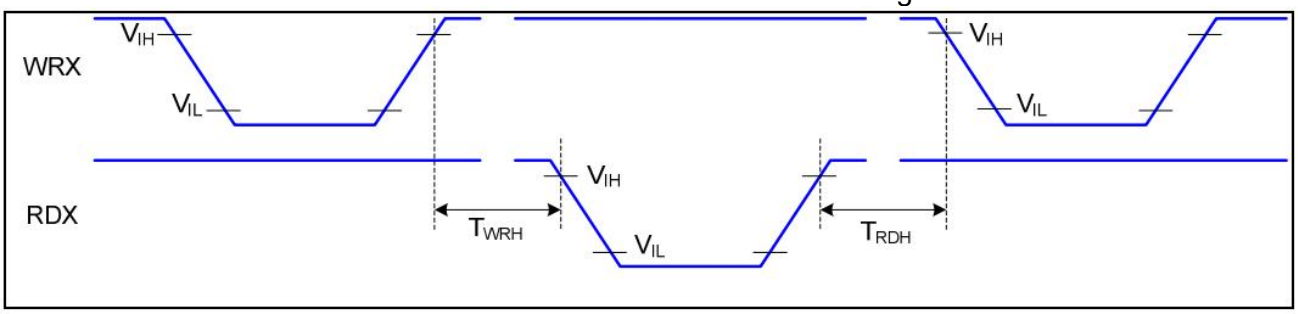

Note: The rising time and falling time (Tr, Tf) of input signal and fall time are specified at 15 ns or less. Logic high and low levels are specified as 30% and 70% of VDDI for Input signals.

VDDI=1.65 to 3.3V, VDD=2.4 to 3.3V, AGND=DGND=0V, Ta=25℃

Signal	Symbol	Parameter	MIN	MAX	Unit	Description
D/CX	T_{AST}	Address setup time	0		ns	-
	T_{AHT}	Address hold time (Write/Read)	10		ns	
CSX	T_{CHW}	Chip select “H” pulse width	0		ns	-
	T_{CS}	Chip select setup time (Write)	15		ns	
	T_{RCS}	Chip select setup time (Read ID)	45		ns	
	T_{RCSFM}	Chip select setup time (Read FM)	355		ns	
	T_{CSF}	Chip select wait time (Write/Read)	10		ns	
	T_{CSH}	Chip select hold time	10		ns	
WRX	T_{WC}	Write cycle	66		ns	
	T_{WRH}	Control pulse “H” duration	15		ns	
	T_{WRL}	Control pulse “L” duration	15		ns	
RDX (ID)	T_{RC}	Read cycle (ID)	160		ns	When read ID data
	T_{RDH}	Control pulse “H” duration (ID)	90		ns	
	T_{RDL}	Control pulse “L” duration (ID)	45		ns	
RDX (FM)	T_{RCFM}	Read cycle (FM)	450		ns	When read from frame memory
	T_{RDHFM}	Control pulse “H” duration (FM)	90		ns	
	T_{RDLFM}	Control pulse “L” duration (FM)	355		ns	
D[17:0]	T_{DST}	Data setup time	10		ns	For CL=30pF
	T_{DHT}	Data hold time	10		ns	
	T_{RAT}	Read access time (ID)		40	ns	
	T_{RATFM}	Read access time (FM)		340	ns	
	T_{ODH}	Output disable time	20	80	ns	

Parallel Interface Characteristics

10. Optical Characteristics

(Using Color filter + C light, reference only)

Item		Symbol	Condition	Min	Typ	Max	Unit	Remark
Response time		Tr+ Tf	θ=0° ∅=0°	---	30	45	ms	Note2
Contrast ratio		Cr		700	900	---	---	Note3
Transmittance (with POL)		T		3.5	4.3	---	%	C light
Viewing angle range (CR≥10)			∅ = 90	80	---	---	deg	Note4
			∅ = 270	80	---	---	deg	
			∅ = 0	80	---	---	deg	
			∅ = 180	80	---	---	deg	
NTSC		---	---	---	55	---	%	
CIE(x,y) chromaticity	Red	x	θ=0 ∅=0	0.574	0.624	0.674	---	Note5 CF glass (C light)
		y		0.282	0.332	0.382		
	Green	x		0.230	0.280	0.330		
		y		0.494	0.544	0.594		
	Blue	x		0.091	0.141	0.191		
		y		0.072	0.122	0.172		
	White	x		0.252	0.302	0.352		
		y		0.275	0.325	0.375		

Note1. Measuring Condition

(1)Measuring surrounding: dark room

(2)Ambient temperature: Ta=25℃

(3)15min. warm-up time

Note2. Response time is the time required for the display to transition from Black to White (Rise Time, Tr) and from White to Black (Decay Time, Tf). The measurement instrument is DMS-803. For more information, please refer to FIG 1 and FIG 2.

Note3. Contrast Ratio (CR) is defined mathematically as below. Measured at the center point of panel by DMS-803, please refer to FIG 1

$$\text{Contrast ratio (CR)} = \frac{\text{Brightness on the "white" state}}{\text{Brightness on the "black" state}}$$

Note4. Viewing angle is the angle at which the contrast ratio is greater than 10(CR≥10:1). The measurement instrument is DMS-803. For more information, please refer to FIG 1 and FIG 3.

Note5. CIE (x, y) chromaticity for CF only, measured with Olympus MHL-450 under C light.

FIG. 1 DMS-803 Measurement Set-Up

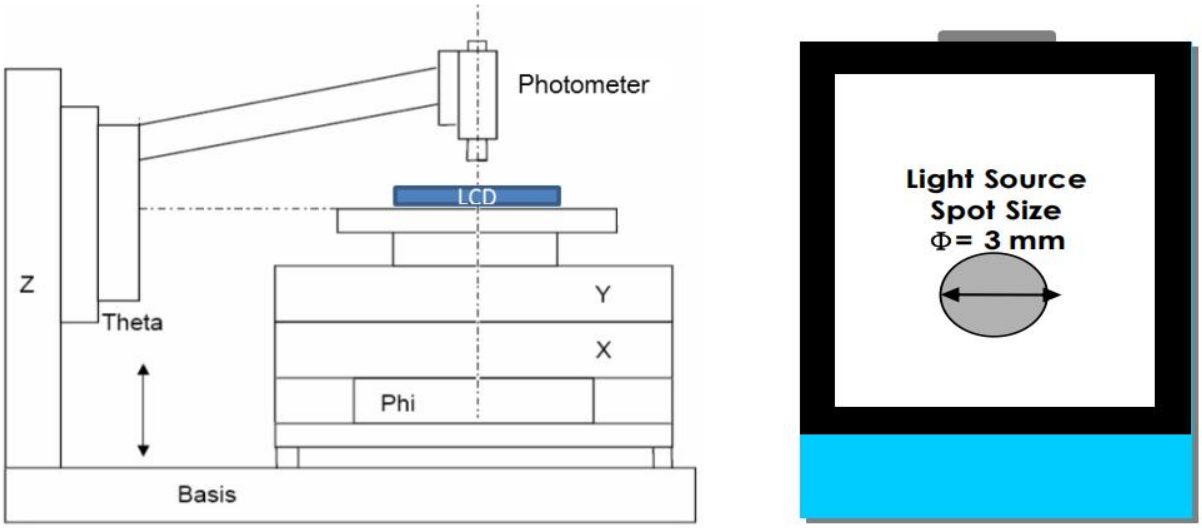

FIG. 2 The definition of Response Time

The response time is defined as the following figure and shall be measured by switching the input signal for “black” and “white”. This definition is valid for a normally black display. For a normally white display the opposite definition applies.

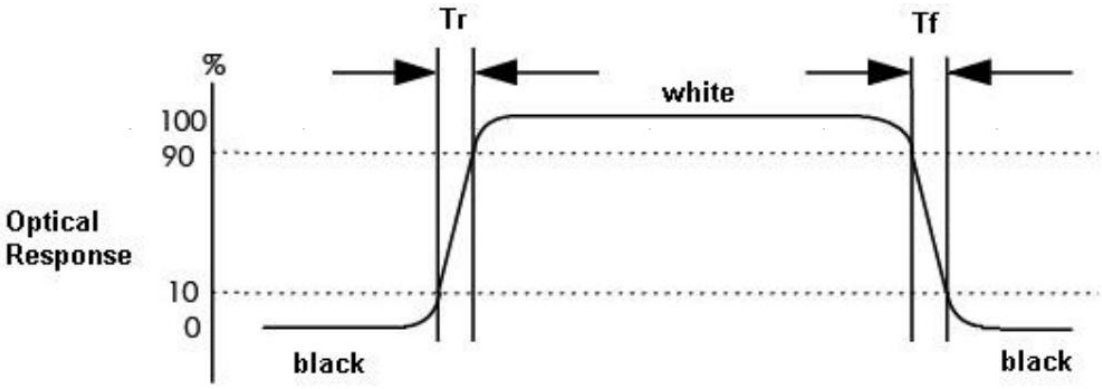

FIG. 3 The definition of viewing angle

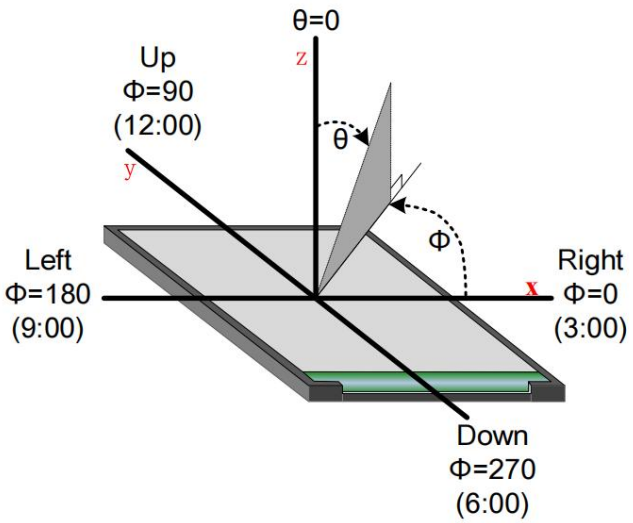

11. Reliability

11.1. MTBF

The LCD module shall be designed to meet a minimum MTBF value of 50000 hours with normal.

11.2. Test Condition

No	Item	Condition	Criteria
1	High Temperature Operating	70℃*24Hrs	1. No Defect Of Operational Function In Room Temperature Are Allowable. 2. IDD of LCM in Pre-and Post-Test Should Follow Specification.
2	Low Temperature Operating	-20℃*24Hrs	
3	High Humidity Storage	50℃*90%RH*24Hrs	
4	High Temperature Storage	80℃*24Hrs	
5	Low Temperature Storage	-30℃*24Hrs	
6	Thermal Cycling Test Storage	-	
7	Packing vibration	-	
8	Electrical Static Discharge	-	
		-	
9	Drop Test (Packaged)	-	

Note1. The test samples should be applied to only one test item.

Note2. Sample size for each test item is 2pcs.

Note3. No defection function allowable.

12. Precautions

12.1. Storage Conditions

12.1.1. Store the panel or module in a dark place where the temperature is 23±5℃and the humidity is below 45±20%RH.

12.1.2. Store in anti-static electricity container.

12.1.3. Store in clean environment, free from dust, active gas, and solvent.

12.1.4. Do not place the module near organics solvents or corrosive gases.

12.1.5. Do not crush, shake, or jolt the module.

12.1.6. Strong light exposure causes degradation of polarizer and color filter.

12.2. Handling Precautions

12.2.1. Avoid static electricity, which can damage the CMOS LSI.

12.2.2. The polarizing plate of the display is very fragile, please handle if very carefully.

12.2.3. Do not give external shock.

12.2.4. Do not apply excessive force on the surface.

12.2.5. Do not wipe the polarizer with dry cloth, as it might cause scratch. If the surface of the LCD needs to be cleaned, wipe it swiftly with cotton or other soft cloth soaked with petroleum IPA, do not use other chemicals.

12.2.6. Reverse and use within ratings in order to keep performance and prevent damage

12.2.7. Do not remove the panel or frame from the module.

12.2.8. Except for soldering the interface, do not make any alterations or modifications with a soldering iron; Ensure welding temperature at 320 ° C to 350 ° C, the welding timecontrol within the 10 s, welding note don't stay too long in the same place to avoid scald FPC.

12.3. Limited Warranty

12.3.1. Our warranty liability is limited to repair and/or replacement. We will not be responsible for any consequential loss. (我们的保证责任仅限于修理和/或更换。我们将不负责任何相应的损失。)

12.3.2. If possible, we suggest customer to use up all modules in six months. If the module storage time over twelve months, we suggest that recheck it before the module be used. (如果可能，我们建议客户在6个月内用完所有模块。如果模块存放时间超过12个月，我们建议在使用模块前重新检查。)

12.3.3. The warranty period is twelve months from the date of delivery. Buyer shall complete the assembly of all processes within twelve months of validity. During the warranty period, if the product quality problems, our company will be responsible for repair and replacement. All products must be stored and handled in accordance with regulations. Under warranty. When the goods do not comply with the above terms, we do not provide warranty services.（保修期为交货之日起十二个月。买方应在12个月内完成所有流程的组装。在保修期内，如果产品出现质量问题，我公司将负责维修和更换。所有产品必须按照规定储存和处理。在保修期内。当货物不符合上述条款时，我们不提供保修服务。）