REV	REVISION RECORD	SIGN	DATA
V1	First edition	YYQ	20241107
V2	更换新款背光	YYQ	20250630

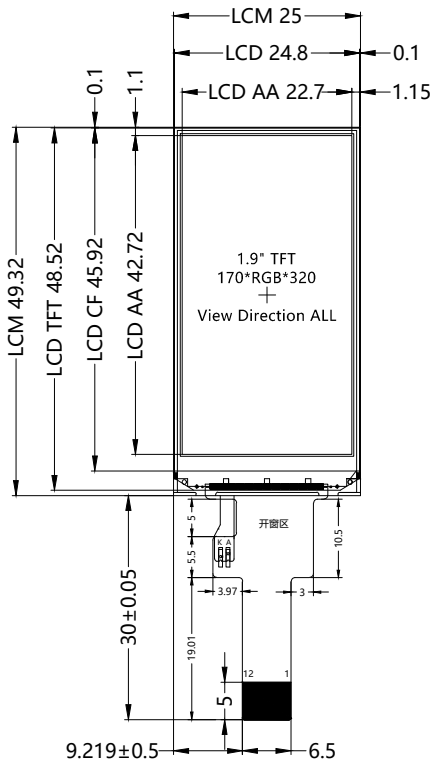

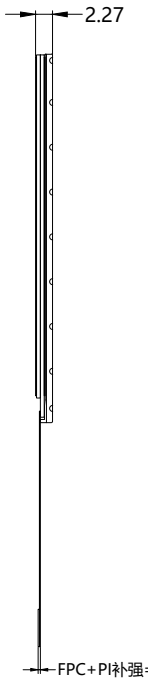

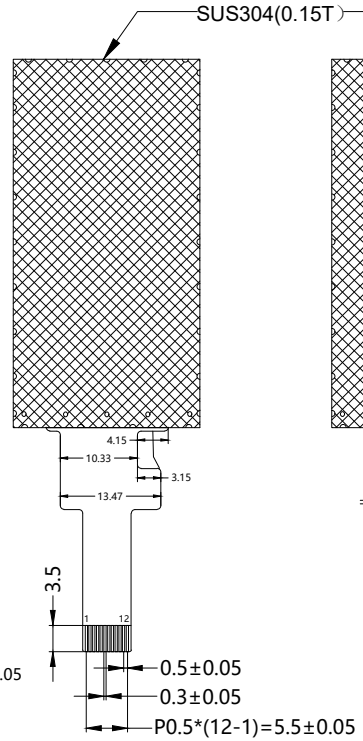

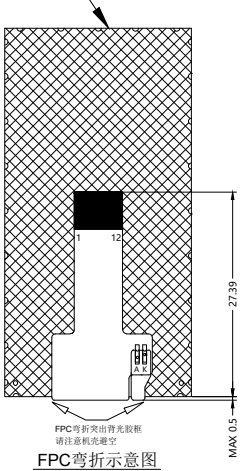

NO.	PIN NAME
1	GND
2	RESET
3	SCL
4	D/C
5	CS
6	SDA
7	SDO
8	TE
9	VCC
10	IOVCC
11	LEDA
12	LEDK

NOTES:
1.Display Size (显示尺寸) :1.9"TFT
2.Viewing Direction (视角方向) : ALL
3.Display Mode (显示模式) : Transmissive/Normally Black
4.Resolution (分辨率) : 170*RGB*320
5.Color (颜色) : 262K
6.Drive IC (驱动IC) : ST7789
7.Interface (接口) : 4 Wire SPI
8.Backlight (背光) : White IF=80mA,VF=3.2V(TYP)
9.Luminance (透屏亮度) : 300cd/m²(TYP)
10.Operating temperature (工作温度) : -20℃+70℃
11.Storage temperature (存储温度) : -30℃+80℃
12.RoHS (欧盟标准) : YES
*Unspecified Tolerance (公差) : ±0.1

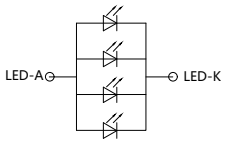

Backlight Circuit Diagram:
(背光电路图)

深圳市金逸晨电子有限公司
ShenZhen GoldenMorning Electronic Co.,Ltd

LCM NO:	T190X7-C12-05			VERSION V2
UNITS:MM	SCALE: FIT	DESIGNED BY:	CHECKED BY:	APPROVED BY:
	SHEET: 1 OF 1	YYQ	ZY	
	UNIT: MM DATE	2025-06-30	2025-06-30	