PREPARED BY: DATE	SHARP MOBILE LIQUID CRYSTAL DISPLAY GROUP SHARP CORPORATION	SPEC No. LCY－W13329
		FILE No.
APPROVED BY: DATE		ISSUE 31st.May.2013
		PAGE 28 Pages
		APPLICABLE DIVISION LCD CHINA DESIGN CENTER
	SPECIFICATION	

DEVICE SPECIFICATION for

CGS Color LCD Module

(1080× RGB × 1920 dots)

Model No.

LS055T1SX01(G)

☐ CUSTOMER'S APPROVALDATE

DATE _____

BY _____

PRESENTED BY _____

HIROYUKI.WATATANI
GENERAL MANAGER
Design Center No.1
Display Device Business Group
SHARP（China）Investment Co. , Ltd

RECORDS OF REVISION				DOC. First issue	31st.May.2013
				Model No.	LS055T1SX01(G)
				Spec. No.	LCY－W13329
DATE	REF.PAGE PARAGRAPH DRAWING No.	REVISED NO.	SUMMARY		
31st.May.2013			First Issue		

NOTICE

○ These specification sheets are the proprietary product of SHARP CORPORATION (SHARP) and include materials protected under copyright of SHARP. Do not reproduce or cause any third party to reproduce them in any form or by any means, electronic or mechanical, for any purpose, in whole or in part, without the express written permission of SHARP.

○ The application examples in these specification sheets are provided to explain the representative applications of the device and are not intended to guarantee any industrial property right or other rights or license you to use them. SHARP assumes no responsibility for any problems related to any industrial property right of a third party resulting from the use of the device.

○ The device listed in these specification sheets was designed and manufactured for use in Telecommunication equipment (terminals)

○ In case of using the device for applications such as control and safety equipment for transportation (aircraft, trains, automobiles, etc.), rescue and security equipment and various safety related equipment which require higher reliability and safety, take into consideration that appropriate measures such as fail-safe functions and redundant system design should be taken.

○ Do not use the device for equipment that requires an extreme level of reliability, such as aerospace applications, telecommunication equipment (trunk lines), nuclear power control equipment and medical or other equipment for life support.

○ SHARP assumes no responsibility for any damage resulting from the use of the device which does not comply with the
instructions and the precautions specified in these specification sheets.

○ Contact and consult with a SHARP sales representative for any questions about this device.

[For handling and system design]

(1) Do not scratch the surface of the polarizer film as it is easily damaged.

(2) If the cleaning of the surface of the LCD panel is necessary, wipe it swiftly with cotton or other soft cloth. Do not use organic solvent as it damages polarizer.

(3) Water droplets on polarizer must be wiped off immediately as they may cause color changes, or other defects if remained for a long time.

(4) Since this LCD panel is made of glass, dropping the module or banging it against hard objects may cause cracks or fragmentation.

(5) Certain materials such as epoxy resin (amine's hardener) or silicone adhesive agent (de-alcohol or de-oxym) emits gas to which polarizer reacts (color change). Check carefully that gas from materials used in system housing or packaging do not hart polarizer.

(6) Liquid crystal material will freeze below specified storage temperature range and it will not get back to normal quality even after temperature comes back within specified temperature range. Liquid crystal material will become isotropic above specified temperature range and may not get back to normal quality. Keep the LCD module always within specified temperature range.

(7) Do not expose LCD module to the direct sunlight or to strong ultraviolet light for long time.

(8) If the LCD driver IC (COG) is exposed to light, normal operation may be impeded. It is necessary to design so that the light is shut off when the LCD module is mounted.

(9) Do not disassemble the LCD module as it may cause permanent damage.

(10) As this LCD module contains components sensitive to electrostatic discharge, be sure to follow the instructions in below.

① Operators
Operators must wear anti-static wears to prevent electrostatic charge up to and discharge from human body.

② Equipment and containers
Process equipment such as conveyer, soldering iron, working bench and containers may possibly generate electrostatic charge up and discharge. Equipment must be grounded through 100Mohms resistance. Use ion blower.

③ Floor
Floor is an important part to leak static electricity which is generated from human body or equipment.
There is a possibility that the static electricity is charged to them without leakage in case of insulating floor, so the counter measure (electrostatic earth:$1\times10^{8}\Omega$) should be made.

④Humidity
Proper humidity of working room may reduce the risk of electrostatic charge up and discharge. Humidity should be kept over 50% all the time.

⑤Transportation/storage
Storage materials must be anti-static to prevent causing electrostatic discharge.

⑥Others
Protective film is attached on the surface of LCD panel to prevent scratches or other damages. When removing this protective film, remove it slowly under proper anti-ESD control such as ion blower.

(11) Hold LCD very carefully when placing LCD module into the system housing. Do not apply excessive stress or pressure to LCD module. Do not to use chloroprene rubber as it may affect on the reliability of the electrical interconnection.

(12) Do not hold or touch LCD panel to flex interconnection area as it may be damaged.

(13) As the binding material between LCD panel and flex connector mentioned in 12) contains an organic material, any type of organic solvents are not allowed to be used. Direct contact by fingers is also prohibited.

(14) When carrying the LCD module, place it on the tray to protect from mechanical damage. It is recommended to use the conductive trays to protect the CMOS components from electrostatic discharge. When holding the module, hold the Plastic Frame of LCD module so that the panel, COG and other electric parts are not damaged.

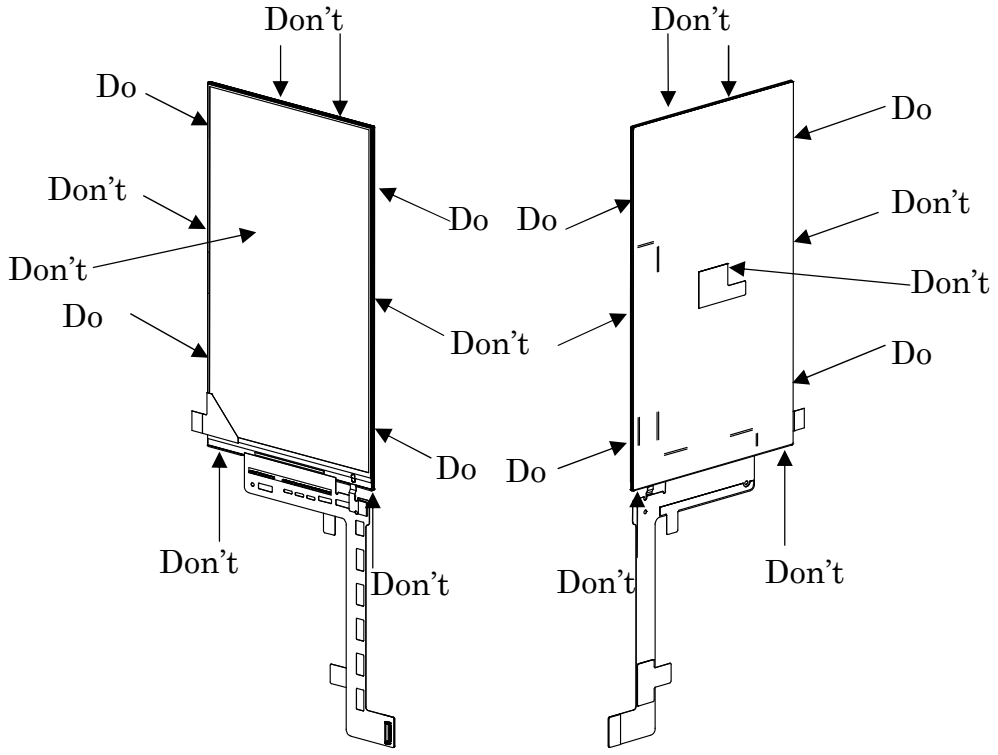

(15) Do not touch the COG's patterning area. Otherwise the circuit may be damaged.

(16) Do not touch LSI chips as it may cause a trouble in the inner lead connection.

(17) Place a protective cover on the LCD module to protect the glass panel from mechanical damages.

(18) LCD panel is susceptible to mechanical stress and even the slightest stress will cause a color change in background. So make sure the LCD panel is placed on flat plane without any continuous twisting, bending or pushing stress.

(19) Protective film is placed onto the surface of LCD panel when it is shipped from factory. Make sure to peel it off before assembling the LCD module into the system. Be very careful not to damage LCD module by electrostatic discharge when peeling off this protective film. Ion blower and ground strap are recommended.

(20) Make sure the mechanical design of the system in which the LCD module will be assembled matches specified viewing angle of this LCD module.

(21) This LCD module does not contain nor use any ODS (1,1,1-Trichloroethane, CCL4) in all materials used, in all production processes.

[For operating LCD module]

(1) Do not operate or store the LCD module under outside of specified environmental conditions.
(2) At the shipment, adjust the contrast of each LCD module with electric volume. LCD contrast may vary from panel to panel depending on variation of LCD power voltage from system.
(3) As opt-electrical characteristics of LCD will be changed, dependent on the temperature, the confirmation of display quality and characteristics has to be done after temperature is set at 25 °C and it becomes stable.

[Precautions for Storage]

(1) Do not expose the LCD module to direct sunlight or strong ultraviolet light for long periods. Store in a dark place.
(2) The liquid crystal material will solidify if stored below the rated storage temperature and will become an isotropic liquid if stored above the rated storage temperature, and may not retain its original properties. Only store the module at normal temperature and humidity (25±5°C,60±10%RH) in order to avoid exposing the front polarizer to chronic humidity.
(3) Keeping Method
a. Don't keeping under the direct sunlight. b. Keeping in the tray under the dark place.

DON'T DO

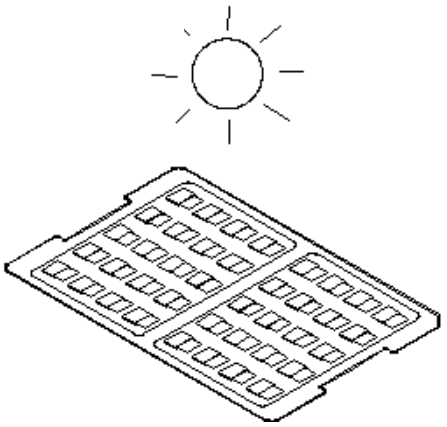

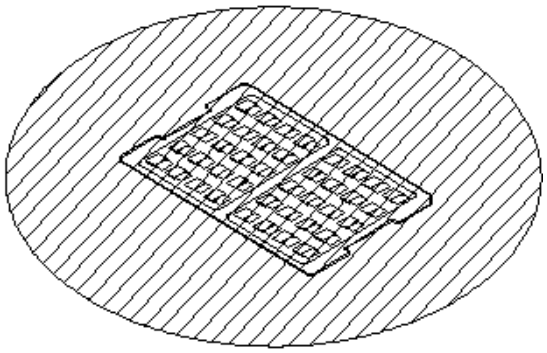

(1) Do not operate or store the LCD module under outside of specified environmental conditions.
(2) Be sure to prevent light striking the chip surface.

[Other Notice]

(1) Do not operate or store the LCD module under outside of specified environmental conditions.

(2) As electrical impedance of power supply lines (VDDIO-GND) are low when LCD module is working, place the de-coupling capacitor nearby LCD module as close as possible.

(3) Reset signal must be sent after power on to initialize LSI. LSI does not function properly until initialize it by reset signal.

(4) Generally, at power on, in order not to apply DC charge directly to LCD panel, supply logic voltage first and initialize LSI logic function including polarity alternation. Then supply voltage for LCD bias. At power off, in order not to apply DC charge directly to LCD panel, execute Power OFF sequence and Discharge command.

(5) Don’t touch to FPC surface, exposed IC chip, electric parts and other parts, to any electric, metallic materials.

(6) No bromide specific fire-retardant material is used in this module.

(7) Do not display still picture on the display over 2 hours as this will damage the liquid crystal.

(8) The connector used in this LCD module is the one Sharp have not ever used.
Therefore, please note that the quality of this connector concerned is out of Sharp's guarantee.

[Precautions for Discarding Liquid Crystal Modules]

COG: After removing the LSI from the liquid crystal panel, dispose of it in a similar way to circuit boards from electronic devices.
LCD panel: Dispose of as glass waste. This LCD module contains no harmful substances. The liquid crystal panel contains no dangerous or harmful substances. The liquid crystal panel only contains an extremely small amount of liquid crystal (approx.100mg) and therefore it will not leak even if the panel should break.
-Its median lethal dose (LD50) is greater than 2,000 mg/kg and a mutagenetic (Aims test: negative) material is employed.
FPC: Dispose of as similar way to circuit board from electric device.

1. Application

This data sheet is to introduce the specification of LS055T1SX01 active matrix 16,777,216 color LCD module.
Main color LCD module is controlled by Driver IC (R63311 without RAM).
If any problem occurs concerning the items not stated in this specification, it must be solved sincerely by both parties after deliberation.
As to basic specification of driver IC refer to the IC specification and handbook.

2. Construction and Outline

Construction: LCD panel, Driver (COG), FPC with electric components,
12 White LED lumps, prism sheet, diffuser, light guide and reflector, plastic frame and PET Sheet to fix them mechanically.
Outline: See page 28
Connection: B to B connector (PANASONIC, AXT630124　30 pins, 0.4mm pitch)
There shall be no scratches, stains, chips, distortions and other external drawbacks that may affect the display function.

Rejection criteria shall be noted in Inspection Standard (IIS119049)

In order to realize thin module structure, double-sided adhesive tapes are used to fix LCD panels. As these tapes do not guarantee to permanently fix the panels, LCD panel may rise from the module when shipped from factory.
So please make sure to design the system to hold the edges of LCD panel by the soft material such as sponge when LCD module is assembled into the cabinet.

3. Mechanical Specification

Table 1

Parameter		Specifications	Unit
Outline dimensions (typ)		71.72(W)×130.40(H)×1.655 (D)(mm)	mm
Main LCD Panel	Active area	69.012(W)×122.688(H)	mm
	Viewing area	70.012(W) × 123.688(H)	mm
	Display format	1080(W)×RGB×1920(H)	-
	Dot pitch	0.0213 (W) ×0.0639 (H)	mm
	Base color　*1	Normally Black	-
Mass		Approx 25	g

*1 Due to the characteristics of the LC material, the colors vary with environmental temperature.

4. Absolute Maximum Ratings

(4-1) Electrical absolute maximum ratings

Table 2 Ta=25 ℃

Parameter	Symbol	Min	Max	Unit	Remark
Supply Voltage	VDDIO-GND	-0.3	+4.6	V	*1
	VSP-GND	-0.3	+6.5	V	*1
	VSN-GND	-6.5	+0.3	V	*1

*1: Voltage applied to GND pins. GND pin conditions are based on all the same voltage (0V).
Always connect all GND externally and use at the same voltage.

Environment Conditions

Table 3

Item	Top		Tstg		Remark
	MIN.	MAX.	MIN.	MAX.	
Ambient temperature	-20 °C	+60°C	-30 °C	+70°C	Note 2)
Humidity	Note 1)		Note 1)		No condensation

Note1) Ta ≤ 40 °C.....95 % RH Max

Note2) Ta > 40 °C.....Absolute humidity shall be less than Ta=40 °C /95 % RH.

As opt-electrical characteristics of LCD will be changed, dependent on the temperature, the confirmation of display quality and characteristics has to be done after temperature is set at 25 °C and it becomes stable.

Be sure not to exceed the rated voltage, otherwise a malfunction may occur.

5. Electrical Specifications

(5-1) Electrical characteristics

Table 4

Ta=25 ℃, GND=0V

Parameter	Symbol	Conditions	Min.	Typ.	Max.	Unit	Applicable Pin
Supply voltage1	VDDIO-GND	Ta=-20～70 °C	1.7	1.8	1.9	V	(note 1)
Supply voltage2	VSP-GND	Ta=-20～70 °C	5.45	5.6	5.75	V	(note 1)
Supply voltage3	VSN-GND	Ta=-20～70 °C	-5.25	-5.4	-5.55	V	(note 1)
"H" level input voltage	V_{IH}	Ta=-20～70 °C	0.7 VDDIO	-	VDDIO	V	(note 2)
"L" level input voltage	V_{IL}		0	-	0.3VDDIO	V	
"H" level Input current	I_{IH}	Ta=-20～70 °C	-	-	10	μA	
"L" level Input current	I_{IL}		-10	-	-	μA	
"H" level Output voltage	V_{OH}	Ta=-20～70 °C	0.8 VDDIO	-	VDDIO	V	I_{OH}=-0.1mA
"L" level Output voltage	V_{OL}		-	-	0.2 VDDIO	V	I_{OL}=+0.1mA
MIPI high speed mode							
Common mode voltage High Speed receive mode	VCMRX(DC)	Ta=-20～70 °C	70		330	mV	(note 3)
Differential input high threshold voltage	VIDTH	Ta=-20～70 °C	-	-	70	mV	(Note 3)
Differential input low threshold voltage	VIDTL	Ta=-20～70 °C	-70	-	-	mV	(Note 3)
Single-ended input high voltage	VIHHS	Ta=-20～70 °C	-	-	460	mV	(Note 3)
Single-ended input low voltage	VILHS	Ta=-20～70 °C	-40	-	-	mV	(Note 3)
MIPI LP mode							
Logic High level input voltage	VIH	Ta=-20～70 °C	880		1350	mV	(Note 3)
Logic Low level input voltage	VIL	Ta=-20～70 °C	-50		550	mV	(Note 3)
Logic High level output voltage	VOH	Ta=-20～70 °C	1.1	1.2	1.3	V	(Note 3)
Logic Low level output voltage	VOL	Ta=-20～70 °C	-50		50	mV	(Note 3)
Logic 0 contention threshold	VILCD	Ta=-20～70 °C	-	-	200	mV	(Note 3)
Logic 1 contention threshold	VIHCD	Ta=-20～70 °C	450	-	-	mV	(Note 3)
Current consumption	Ivddio1	Ta=25 °C	-	(16.9)	(21.5)	mA	(note 4)
	Ivsp1	Ta=25 °C	-	(16.5)	(22.6)	mA	(note 4)
	Ivsn1	Ta=25 °C	-	(11.6)	(17.0)	mA	(note 4)
	Ivddio2	Ta=25 °C	-	(2)	(10)	μA	(note 5)
	Ivsp2	Ta=25 °C	-	(5)	(19)	μA	(note 5)
	Ivsn2	Ta=25 °C	-	(3)	(14)	μA	(note 5)

(Note 1) Include Ripple Noise

(Note 2) Applied overshoot

(Note 3) VCMRX(DC)=(VP+VDN)/2;
Minimum 110mV/-110mV HS differential swing is required for display data transfer.

(Note 4) Measurement conditions: Ta=25℃Full screen white pattern, VSP=5.6V/VSN=-5.4V/VDDIO=1.8V, 60HZ Refresh

(Note 5) Measurement conditions: Ta=25℃Standby Mode, VSP=5.6V/VSN=-5.4V/VDDIO=1.8V, 60HZ Refresh

(5-2) LED back light

(1) At main panel the back light uses 12pcs edge light type white LED.

Table 5

Parameter	Conditions	Symbol	Min.	Typ.	Max.	Unit	Remark
Forward current	Ta=25 °C	I_{LED}	-	20*1	-	mA	LED1+/LED1- LED2+/LED2-

LED lamp: NSSW206C (NICHIA)

([Luminous Intensity rank]: NW775～ [Color rank]: Sa52、Sa62

*1 per one piece of LED

*Please consider Allowable Forward Current on used temperature

(refer to Ambient Temperature vs. Allowable Forward Current curve)

■ 周囲温度－許容順電流特性
Ambient Temperature vs.
Allowable Forward Current

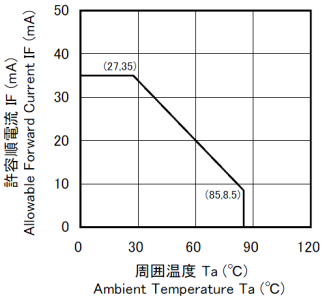

	Rank Sa52			
x	0.2800	0.2720	0.2820	0.2880
y	0.2480	0.2580	0.2720	0.2620

	Rank Sa62			
x	0.2880	0.2820	0.2910	0.2960
y	0.2620	0.2720	0.2870	0.2760

＊Forward Voltage Measurement allowance is ± 0.05V.
＊Luminous flux value is traceable to the CIE 127:2007-compliant national standards.
The measurement value of this product is different from the one of the products measured using the previous reference standards.
＊Please refer to CIE 1931 chromaticity diagram.

Fig.1 LED Characteristic(De-rating Curve)

(1) Absolute Maximum Ratings

Item	Symbol	Absolute Maximum Rating	Unit
Forward Current	I_F	35	mA
Pulse Forward Current	I_{FP}	100	mA
Reverse Voltage	V_R	5	V
Power Dissipation	P_D	112	mW
Operating Temperature	T_{opr}	-30~85	°C
Storage Temperature	T_{stg}	-40~100	°C
Junction Temperature	T_J	105	°C

* Absolute Maximum Ratings at T_A=25°C.
* I_{FP} conditions with pulse width ≤10ms and duty cycle ≤10%.

Item	Rank	Min	Max	Unit
Forward Voltage	-	2.6	3.2	V
Reverse Current	-	-	50	μA
Luminous Flux	NW850	8.50	8.75	lm
	NW825	8.25	8.50	
	NW800	8.00	8.25	
	NW775	7.75	8.00	

(2) Initial Electrical/Optical Characteristics

Item		Symbol	Condition	Typ	Max	Unit
Forward Voltage		V_F	I_F=20mA	2.9	-	V
Reverse Current		I_R	V_R=5V	-	-	μA
Luminous Flux (Chromaticity Coordinate1)		Φ_v	I_F=20mA	8.6	-	lm
Luminous Intensity (Chromaticity Coordinate1)		I_v	I_F=20mA	2.8	-	cd
Chromaticity Coordinate1	x	-	I_F=20mA	0.300	-	-
	y	-	I_F=20mA	0.295	-	-
Luminous Flux (Chromaticity Coordinate2)		Φ_v	I_F=20mA	8.25	-	lm
Luminous Intensity (Chromaticity Coordinate2)		I_v	I_F=20mA	2.7	-	cd
Chromaticity Coordinate2	x	-	I_F=20mA	0.290	-	-
	y	-	I_F=20mA	0.275	-	-
Thermal Resistance		$R_{\theta JS}$	-	85	145	°C/W

* Characteristics at T_A=25°C.
* Luminous Flux value as per CIE 127:2007 standard.
* Chromaticity Coordinates as per CIE 1931 Chromaticity Chart.
* $R_{\theta JS}$ is Thermal Resistance from junction to T_S measuring point.

(5-3) Interface signals

Table 6

Pin No	Symbol	Description	I/O	Remarks
1	D3_N	MIPI data signal line (-)	I	
2	D3_P	MIPI data signal line (+)	I	
3	GND	Ground	-	
4.	D0_N	MIPI data signal line (-)	I/O	
5	D0_P	MIPI data signal line (+)	I/O	
6	GND	Ground	-	
7	CK_N	MIPI clock signal line (-)	I	
8	CK_P	MIPI clock signal line (+)	I	
9	GND	Ground	-	
10	D1_N	MIPI data signal line (-)	I	
11	D1_P	MIPI data signal line (+)	I	
12	GND	Ground	-	
13	D2_N	MIPI data signal line (-)	I	
14	D2_P	MIPI data signal line (+)	I	
15	GND	Ground	-	
16	GND	Ground	-	
17	LED1+	LED back light power group1 positive	-	
18	LED2+	LED back light power group2 positive	-	
19	LED2-	LED back light power group2 negative	-	
20	LED1-	LED back light power group1 negative	-	
21	NC	No connect	-	
22	GND	Ground	-	
23	MAKER ID	Maker ID	-	GND
24	TE	Tearing signal output from driver IC	O	
25	H-SYNC	Last data line STB of gate line period	O	
26	VDDIO	Power supply for I/O	-	
27	VSP	Power supply for source positive	-	
28	VSN	Power supply for source negative	-	
29	LEDPWM	Backlight LED driver PWM	O	
30	RESX	Reset enable pin	I	"L" Active

Mounted connector : 30pins; 0.4mm pitch; B to B connector. (PANASONIC- AXT630124)

Corresponded connector : 30pins; 0.4mm pitch; B to B connector. (PANASONIC -AXT530124)

Signals connect to LCD module. Symbols correspond able to Circuit diagram in Page 11.

(5-4) Schematic of LCD module system

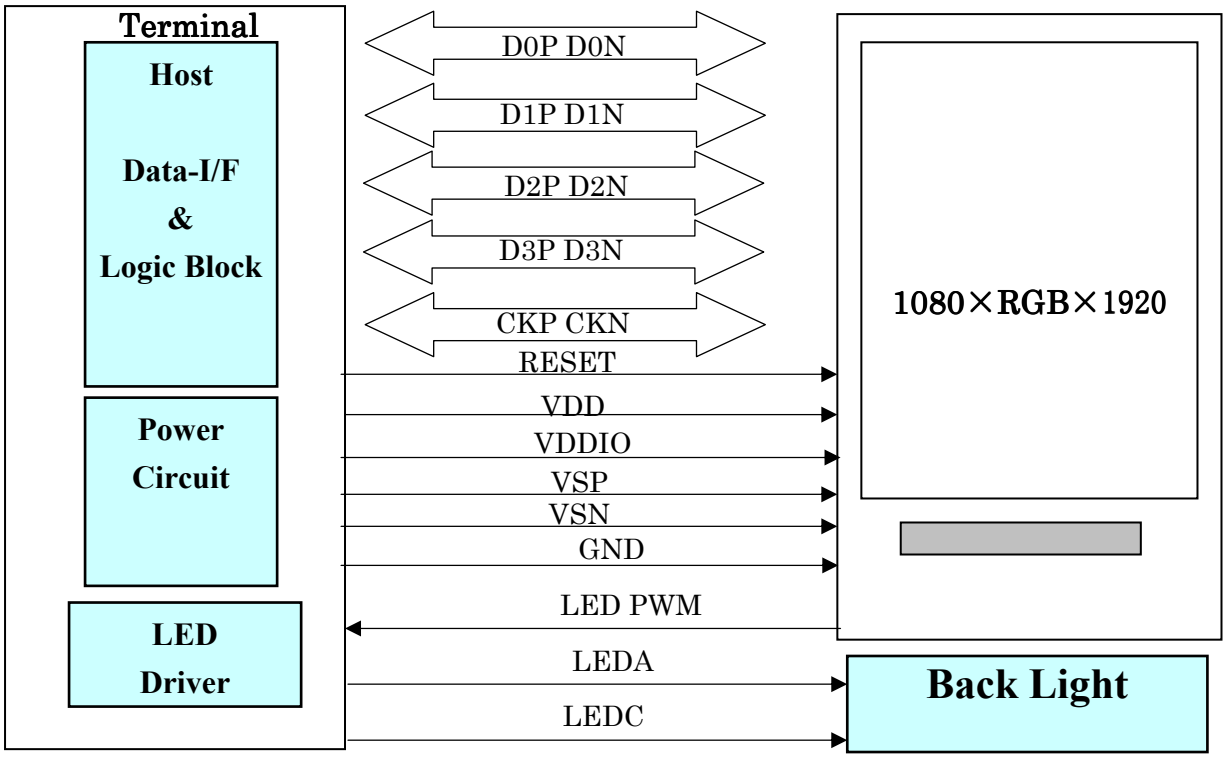

Fig.2 Schematic of LCD module system

(5-5) Circuit Diagrams

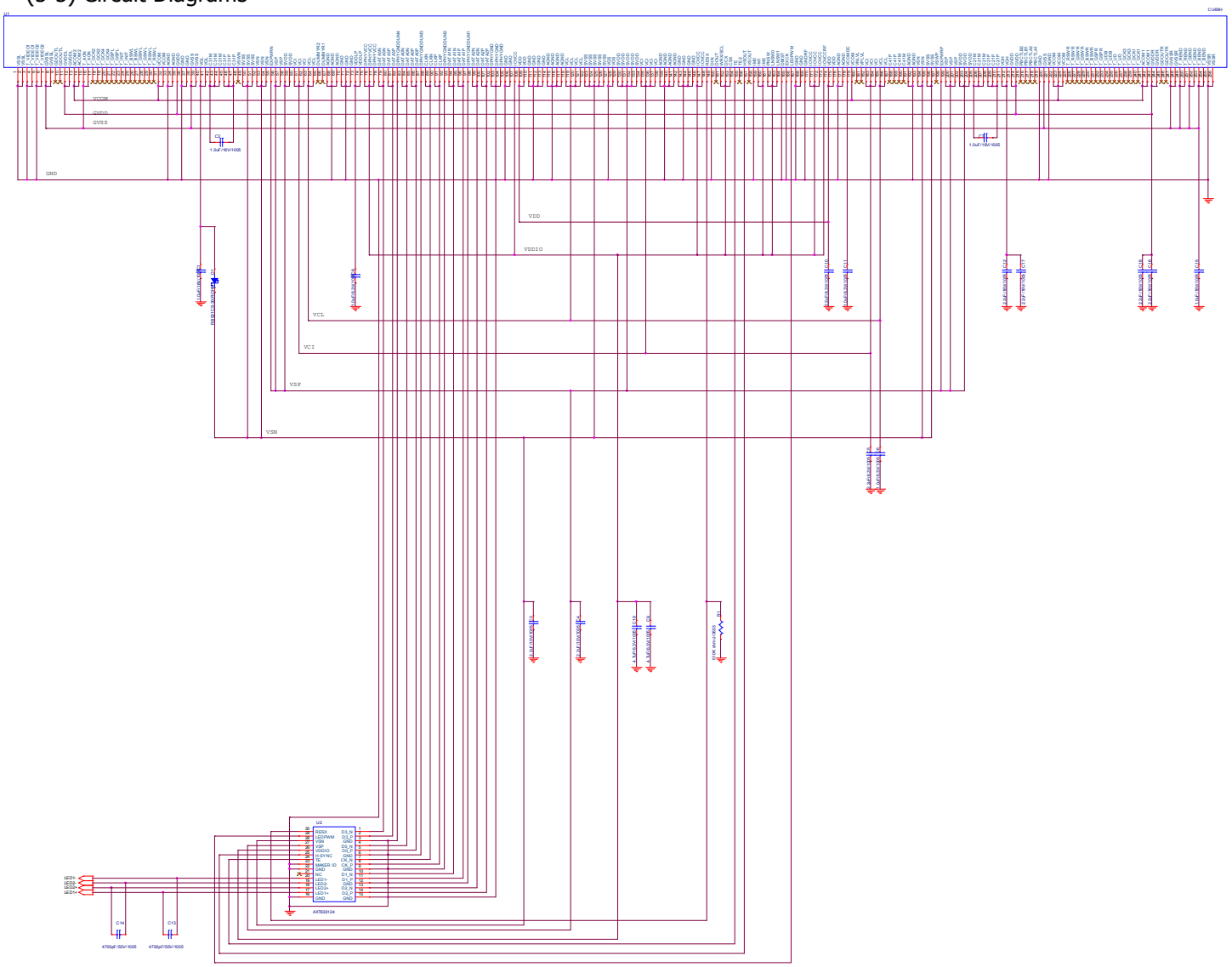

Fig.3 Circuit diagram

(5-6) Parts List

Table 7

Category	Ref. No.	Spec				Vendor
Capacitor	C1	1.0uF	16V	1005		Multi Vendor
	C2	1.0uF	16V	1005		Multi Vendor
	C3	2.2uF	10V	1005		Multi Vendor
	C4	2.2uF	10V	1005		Multi Vendor
	C5	2.2uF	6.3V	1005		Multi Vendor
	C6	1.0uF	6.3V	1005		Multi Vendor
	C7	1.0uF	16V	1005		Multi Vendor
	C8	1.0uF	6.3V	1005		Multi Vendor
	C9	4.7uF	6.3V	1005		Multi Vendor
	C10	2.2uF	6.3V	1005		Multi Vendor
	C11	1.0uF	6.3V	1005		Multi Vendor
	C12	2.2uF	16V	1005		Multi Vendor
	C13	4700pF	50V	1005		TAIYO YUDEN
	C14	4700pF	50V	1005		TAIYO YUDEN
	C15	1.0uF	16V	1005		Multi Vendor
	C16	2.2uF	16V	1005		Multi Vendor
	C17	2.2uF	16V	1005		Multi Vendor
	C18	2.2uF	16V	1005		Multi Vendor
	C19	4.7uF	6.3V	1005		Multi Vendor
Resistor	R1	510kΩ/J				ROHM
Diode	D1	VF<0.4V VR≧max.25V				ROHM
Connector	CN	0.4mm pitch、30Pin				PANASONIC

(5-7)FPC Artwork

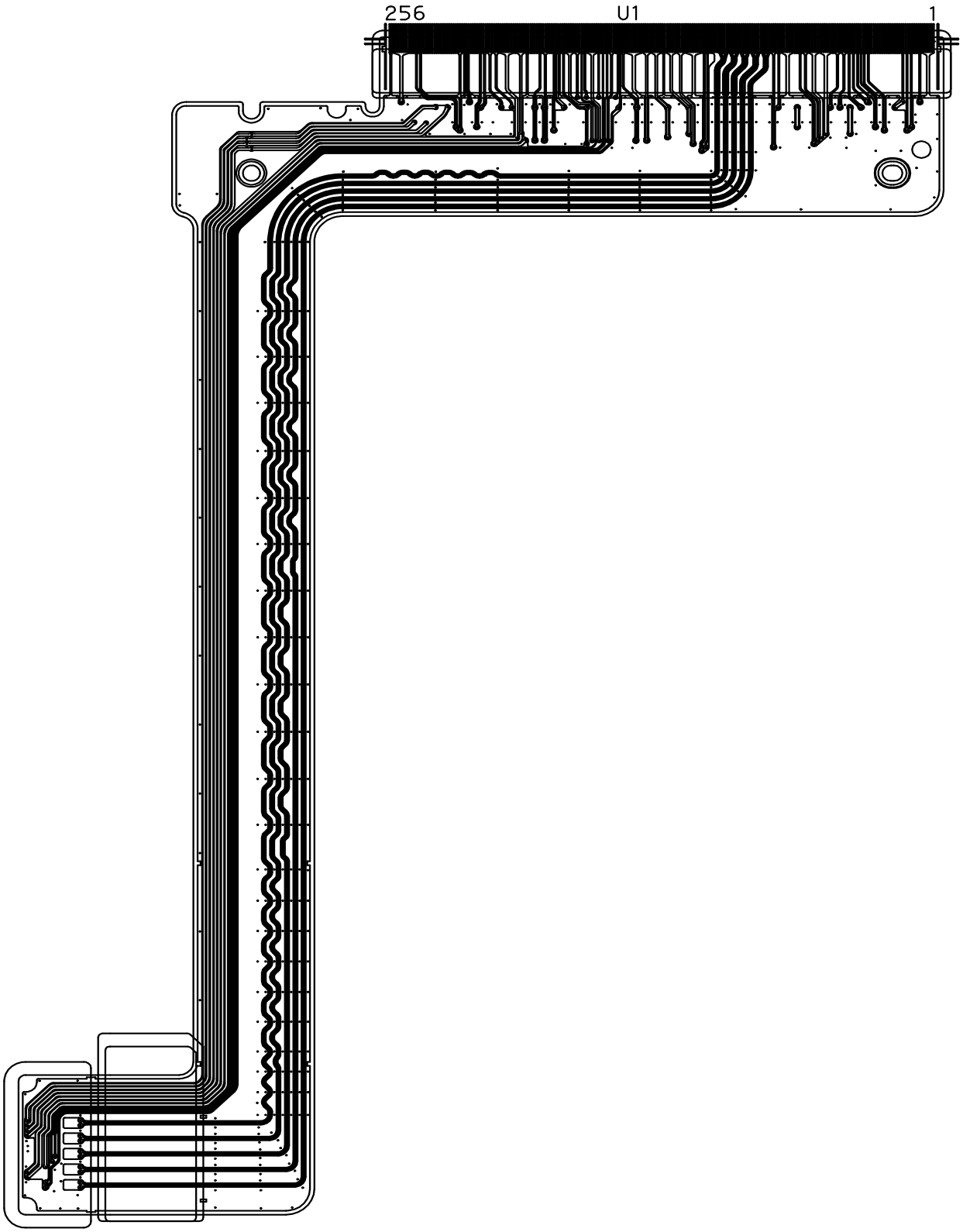

Fig. 4 Layer 1

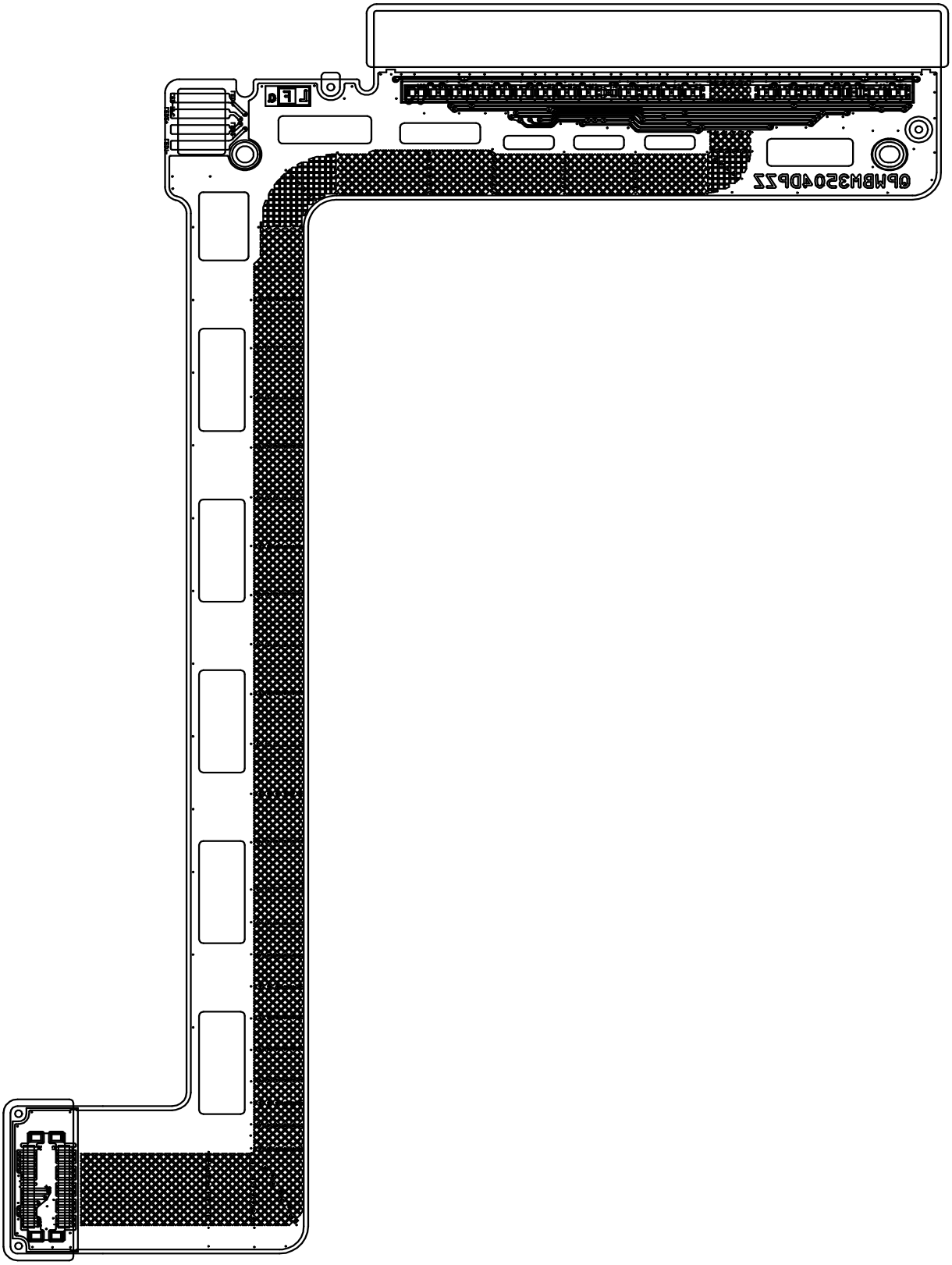

Fig. 5 Layer 2

6. Timing characteristics of input signals

(6-1)MIPI DC/AC Characteristics

<DC characteristics>

Table 8 Ta=+25°C, GND=0V

Item		Symbol	Unit	Test condition	Min.	Typ.	Max.	Note
HS-RX	Differential input high threshold	VIDTH	mV	IOVDD= 1.65V~3.30V	-	-	70	2
	Differential input low threshold	VIDTL	mV	IOVDD= 1.65V~3.30V	-70	-	-	2
	Single-ended input low voltage	VILHS	mV	IOVDD= 1.65V~3.30V	-40	-	-	
	Single-ended input high voltage	VIHHS	mV	IOVDD= 1.65V~3.30V	-	-	460	
	Common-mode voltage HS receive mode	VCMRX(DC)	mV	IOVDD= 1.65V~3.30V	70	-	330	1
	Differential input impedance	ZID	Ω	IOVDD= 1.65V~3.30V	-	100	-	
LP-RX	Logic 0 input voltage not in ULP State	VIL	mV	IOVDD= 1.65V~3.30V	-50	-	550	
	Logic 1 input voltage	VIH	mV	IOVDD= 1.65V~3.30V	880	-	1350	
	I/O leakage current	ILEAK	μA	Vin = -50mV - 1350mV	-10	-	10	
LP-TX	Thevenin output low level	VOL	mV	IOVDD= 1.65V~3.30V	-50	-	50	
	Thevenin output high level	VOH	V	IOVDD= 1.65V~3.30V	1.1	1.2	1.3	
	Output impedance of LP transmitter	ZOLP	Ω	IOVDD=1.80V	110	-	-	
CD-RX	Logic 0 contention threshold	VILCD	mV	IOVDD= 1.65V~3.30V	-	-	200	
	Logic 1 contention threshold	VIHCD	mV	IOVDD= 1.65V~3.30V	450	-	-	

Notes: 1. VCMRX (DC) = (VP+VDN)/2

2. Minimum 110mV/-110mV HS differential swing is required for display data transfer.

<AC Characteristics>

Table 9 Ta=+25°C, GND=0V

Item	Symbol	Unit	Test condition	Min.	Typ.	Max.	Note
DSICLK Frequency	fDSICLK	MHz	IOVCC=1.65V~ 3.30V DPHYVCC=1.65V~ 3.30V	100	-	500	1
DSICLK Cycle time	tCLKP	ns	IOVCC=1.65V~ 3.30V DPHYVCC=1.65V~ 3.30V	1	-	10	
DSI Data Transfer Rate	tDSIR	Mbps	IOVCC=1.65V~ 3.30V DPHYVCC=1.65V~ 3.30V DSI 2 lanes, 3 lanes,4lane	200	-	1000	1
Data to Clock Setup Time	tSETUP	UI	IOVCC=1.65V~ 3.30V DPHYVCC=1.65V~ 3.30V	0.15	-	-	3
		ns	IOVCC=1.65V~ 3.30V DPHYVCC=1.65V~ 3.30V	0.15	-	-	2 ,3
Clock to Data Hold Time	tHOLD	UI	IOVCC=1.65V~ 3.30V DPHYVCC=1.65V~ 3.30V	0.15	-	-	3
		ns	IOVCC=1.65V~ 3.30V DPHYVCC=1.65V~ 3.30V	0.15	-	-	2,3

Notes: 1. When fDSICLK<125MHz, change auto load NV setting so that it is compliant with THS-PREPARE+THS-ZERO spec.

2. Minimum tSETUP/tHOLD Time is 0.15UI. This value may change according to DSI transfer rate.

3. tSETUP/tHOLD Time are measured without HS-TX Jitter.

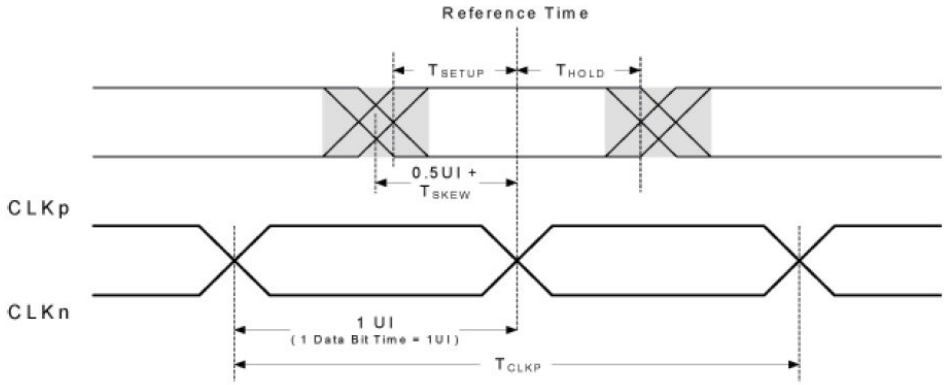

(6-2) Reset Timing Characteristics

Table 10 Ta=+25°C, GND=0V

Item	Symbol	Unit	Test condition	Min.	Max.
Reset low-level width1	tRW1	us	Power supply on	1000	–
Reset low-level width2	tRW2	us	Operation	1000	–
Reset time (Sleep IN)	tRT1	ms	–	–	3
Reset time (Sleep OUT)	tRT2	ms	–	–	3
Noise reject width	tRESNR	us	–	–	1

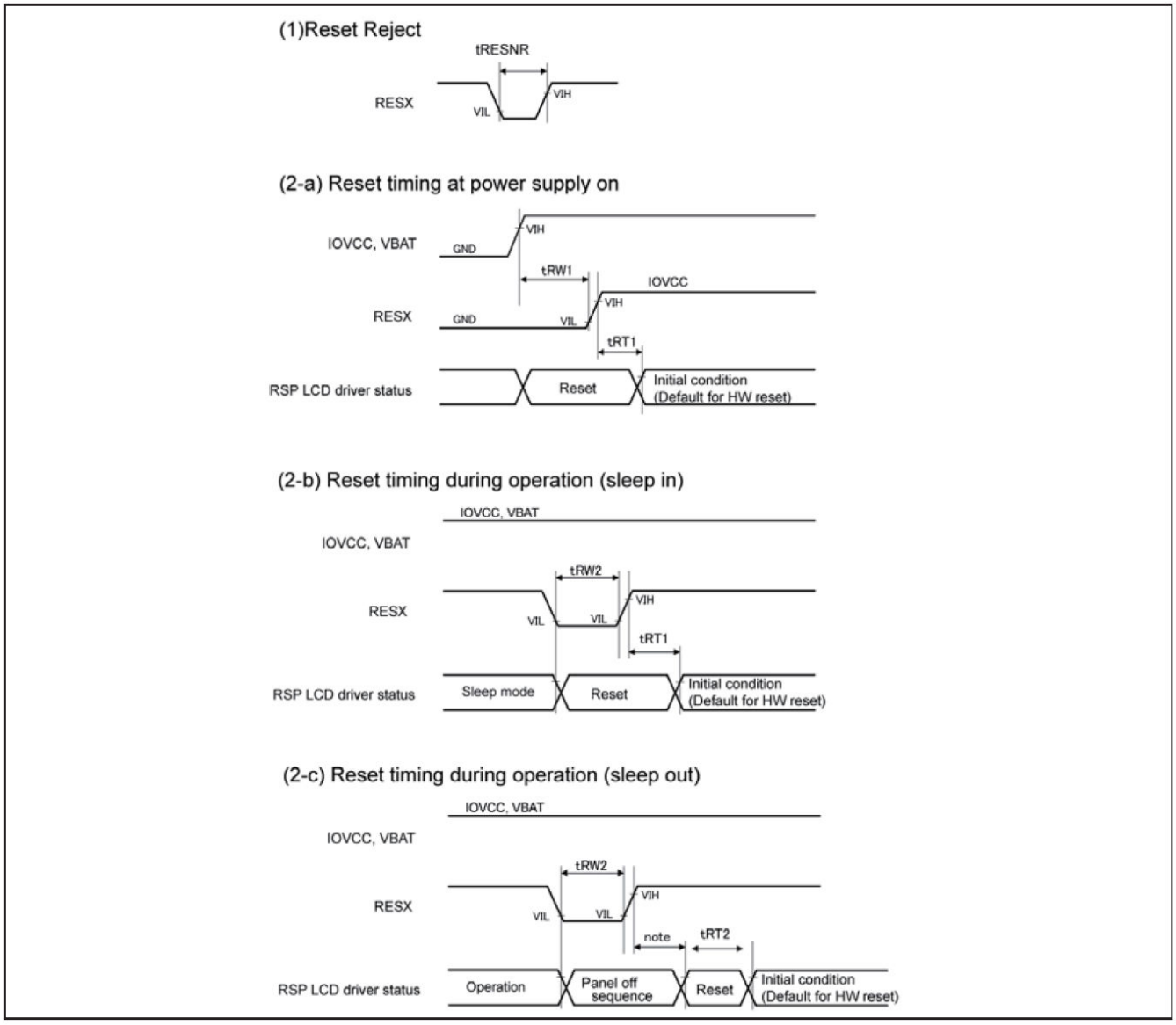

Fig .6 Reset timing characteristics

7. Initial Sequence

(7-1) Power On Sequence

ITEM	"I"NDEX or "D"ATA	HEX	REMARK
Initial condition(XRES=L)			
Power Supply VDDIO(Typ1.8V)			
WAIT MIN.1ms			
Power Supply VSP(Typ5.6V)			
WAIT MIN.0ms			
Power Supply VSN(Typ-5.4V)			
WAIT MIN.1ms			
XRESX=L			
WAIT MIN.10ms			
XRES=H			
WAIT MIN.10ms			
[Automatic] NVM Auto load			
[Automatic] Sleep Mode On			
DCS : Write Display Brightness	Command	51h	
	P1	0Fh	LEDPWM 100% (DBV=FFFh)
	P2	FFh	
DCS : Write CTRL Display	Command	53h	
	P1	04h	LEDPWM ON (BL=1h)
DCS : Write CABC	Command	55h	
	P1	00h	CABC OFF (C=0h)
Display On	Command	29h	
Sleep Out	Command	11h	
Host Display Data transfer			Image Write(Send Video Stream packet)
WAIT Min 120ms			
[Automatic] Sleep Mode Off/Display On			

Table 11

(7-2) Power Off Sequence

ITEM	"I"NDEX or "D"ATA	HEX	REMARK
Display Off	Command	28h	
WAIT Min 20ms			
SLEEP IN	Command	10h	
WAIT Min 80ms			
Image Write OFF (Stop Video Stream packet)			
XRES=L			
VSN(Typ-5.4V) OFF			
WAIT MIN.0ms			
VSP(Typ5.6V) OFF			
WAIT MIN.100ms			
VDDIO(Typ1.8V) OFF			

Table 12

8. Mipi Video Mode Setting

I/F: MIPI 4lane
Panel Size : FHD (1080xRGBx1920)
VSP=5.6,VSN=-5.4V, VDDIO=1.8V
Color Mode:24bit
Panel Driving : 1 Column Inversion
Frame frequency:60Hz
Mode：Non Burst Mode(with Sync Events)

Video Timing Parameters

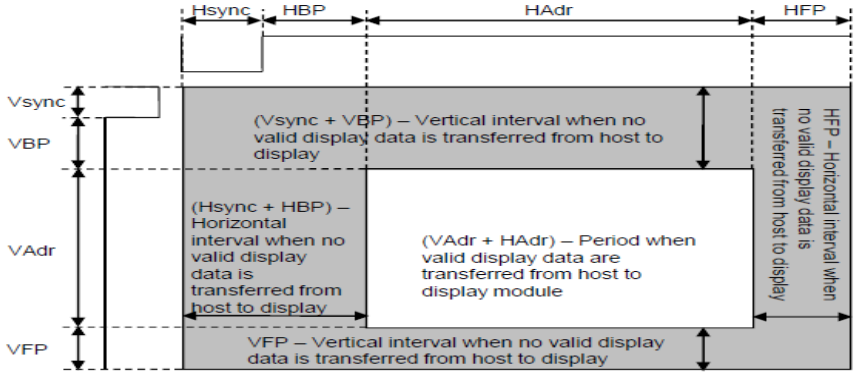

ITEM	Setting	Unit	REMARK
Resolution	1080x RGB x 1920	Pixel	
Hsync(Horizontal Sync Pulse width)	10	Dotclk	*1
HBP(Horizontal Back Porch)	50	Dotclk	*1
HFP(Horizontal Front Porch)	100	Dotclk	*1
HAdr(Horizontal active area)	1080	Dotclk	*1
Vsync(Vertical Sync Pulse width)	2	Line	*2
VBP(Vertical Back Porch)	4	Line	*2
VFP(Vertical Front Porch)	4	Line	*2
VAdr(Vertical active area)	1920	Line	*2
Frame Frequency	60	Hz	TYP
MIPI Lane	4	Lane	
MIPI Data transfer ratio (4lane)	860	Mbps	Mbps/lane

*1 1Dotclk=7ns
*2 1H=8.635us

Table 13

9. Optical Characteristics

Table 14

Vddio=1.8V, VSP=5.6V, VSN=-5.4V, ILED=20mA/pcs, Ta = 25℃

Optical Characteristics

Parameter	symbol	condition	MIN	TYP	MAX	unit	Remark
Brightness	Br	θ=0°	350	500	-	cd/㎡	Note1,2
Contrast	Co	θ=0°	700	1000	-		Note1,3
Viewing Angle	θ11	Co > 5	70	80	-	deg	Note1
	θ12		70	80	-		
	θ21		70	80	-		
	θ22		70	80	-		
White chromaticity	x	θ=0°	0.24	0.29	0.34		Note.1,3
	y		0.26	0.31	0.36		
Red chromaticity	x	θ=0°	0.59	0.64	0.69		
	y		0.28	0.33	0.38		
Green chromaticity	x	θ=0°	0.25	0.30	0.35		
	y		0.54	0.59	0.64		
Blue chromaticity	x	θ=0°	0.11	0.16	0.21		
	y		0.01	0.06	0.11		
Uniformity	-	θ=0°	70	-	-	%	Note.5
NTSC ratio	-	θ=0°		70	-	%	Note.1,3
Flicker ratio	-	*1	-	-	10	%	Note.4

Note 1) Definition of range of visual angle

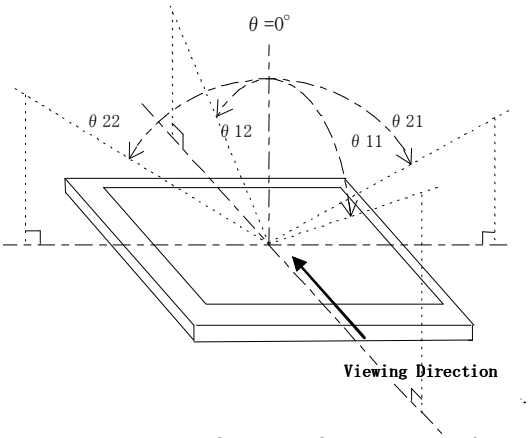

Fig .7 Definition of viewing angle

Note 2) Brightness is measured as shown in Fig.5, and is defined as the brightness of all pixels "White" at the center of display area on optimum contrast.

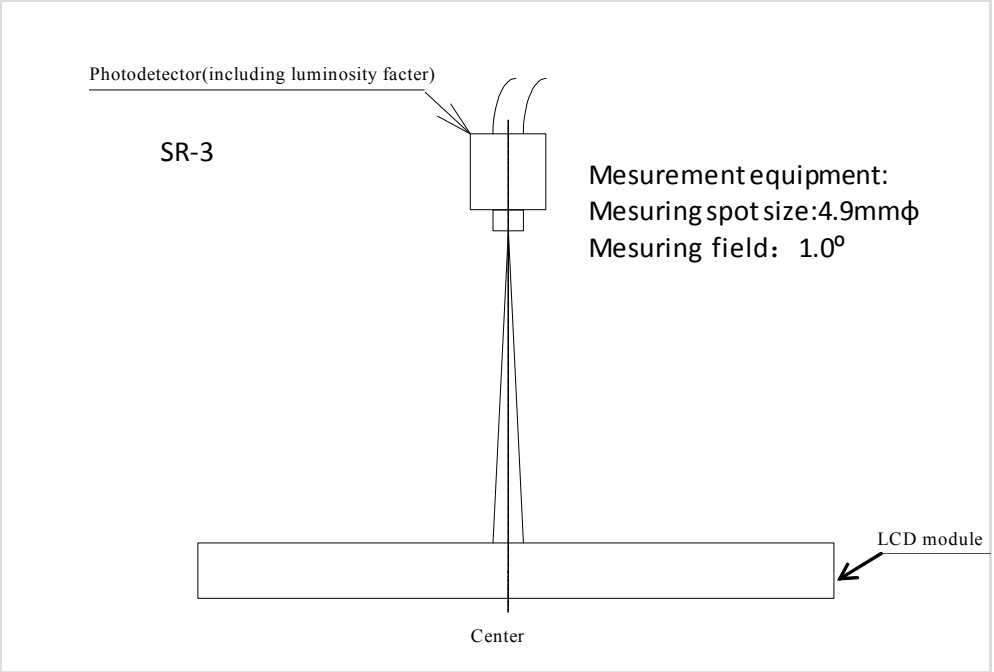

Fig. 8 Optical characteristics Test Method (Brightness)

Note 3) Contrast ratio is defined as follows:

$$Co = \frac{\text{Luminance(brightness) all pixcels "White"}}{\text{Luminance(brightness) all pixcels "Black"}}$$

Note 4) Measuring systems: YOKOGAWA 3298_01 + 3298_11

- ·Temperature = 25℃(±3℃), Frame Frequency = 53Hz~62Hz, LED back-light: ON, Environment brightness < 150 lx
- ·Measured sample : New sample before a long term aging.
- ·Flicker ratio is very sensitive to measuring condition.
- ·Measuring pattern Please refer to figure below.

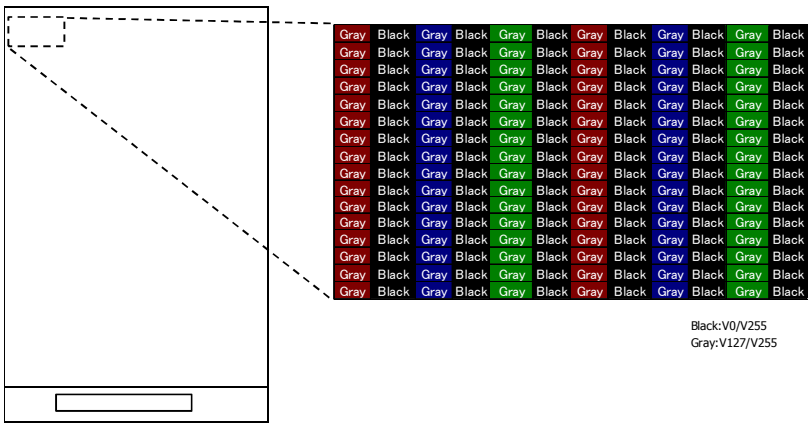

Fig. 9 Flicker Measuring pattern

Note 5) Uniformity is defined as follows:

$$\text{Uniformity} = \frac{\text{Minimum Luminance(brightness) in 9 points}}{\text{Maximum Luminance(brightness) in 9 points}}$$

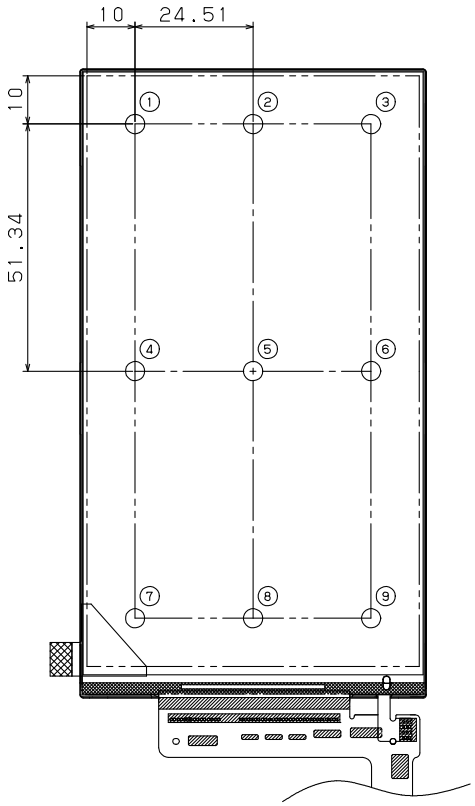

Fig. 10 Measuring Point

10. Reliability

Table.15

No.	Test	Condition	Judgment criteria
1	Temperature Cycling	-20℃ → 70℃ → -20℃ … 60min (3min) 60min (3min) 60min 5cycle	Per table in below
2	High Temp. Storage	Ta=70℃ 240h	Per table in below
3	Low Temp. Storage	Ta=-30℃ 240h	Per table in below
4	Humidity Operation	Ta=40℃ 95%RH 240h	Per table in below (polarizer discoloration is excluded)
5	High Temp. Operation	Ta=60℃ 240h	Per table in below
6	Low Temp. Operation	Ta=-20℃ 240h	Per table in below
7	ESD	Discharge resistance: 0 Ω Discharge capacitor: 200 pF Discharge voltage: ±200 V Max Discharge 1 time to each input line ※ "GND" of display module is connected GND of test system ground.	Per table in below

INSPECTION	CRITERION(after test)
Appearance	No Crack on the FPC, on the LCD Panel
Alignment of LCD Panel	No Bubbles in the LCD Panel No other Defects of Alignment in Active area
Electrical current	Within device specifications
Function / Display	No Broken Circuit, No Short Circuit or No Black line No Other Defects of Display

11. Packaging specifications

(13-1) Details of packaging

1) Packaging materials: Table.17
2) Packaging style : Fig. 11, 12

(13-2) Reliability

1) Vibration test

Table.16

Item	Test			
Frequency	5 Hz to 50 Hz (3 minutes cycle)			
Direction	Up-Down, Left-Right, Front-Back (3 directions)			
Period	Up-Down	Left-Right	Front-Back	Total
	60min	15min	15min	90min

The frequency should start at 5 Hz and vary continuously.

Total amplitude	20mm	0.2mm	20mm	0.2mm	
Frequency	5 Hz	50 Hz	5 Hz	50 Hz	(For 9.8m/s^2)

○ ○ ○

← 3 minutes →

2) Drop test

Drop height: 900mm
Number of drop: 10 times (Drop sequence: 1 corner, 3 edges, 6 faces)

(13-3) Packaging quantities

120 modules per master carton

(13-4) Packaging weight

About 7.5 kg

(13-5) Packaging outline dimensions

580mm×365 mm×187 mm (H)

(Packaging materials)

Table.17

	Parts name	Materials
1	Master carton	Corrugate card board
2	Inside sleeve	Corrugate card board
3	Outside sleeve	Corrugate card board
4	Tray for packaging	Polystyrene with anti-static treatment + anti-static polystyrene
5	Protective bag	Polyethylene with anti-static treatment
6	OPP tape	Polypropylene
7	Bar code label	Anti-static polyethylene

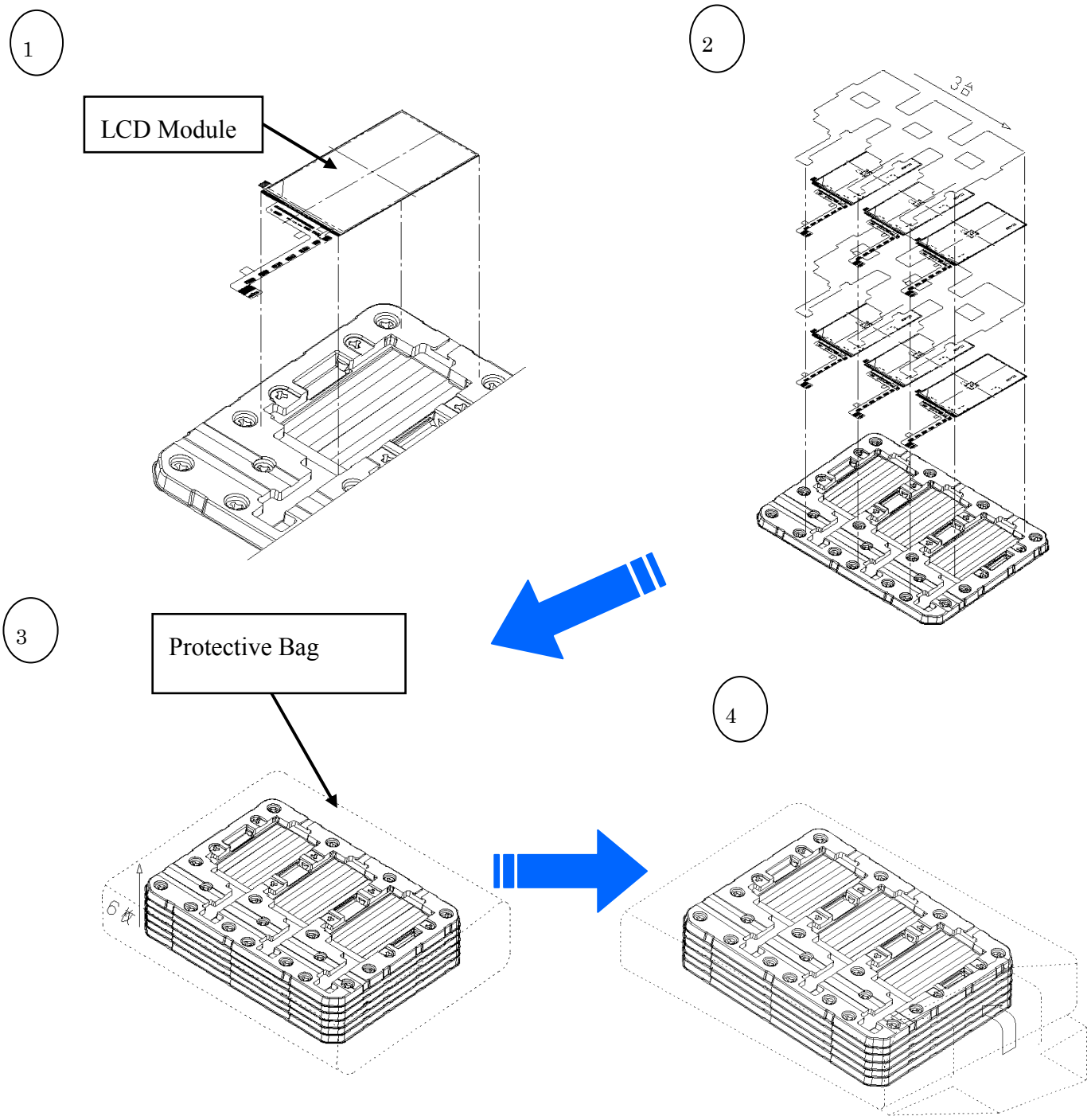

Fig.11 Packaging style (Tray for packaging)

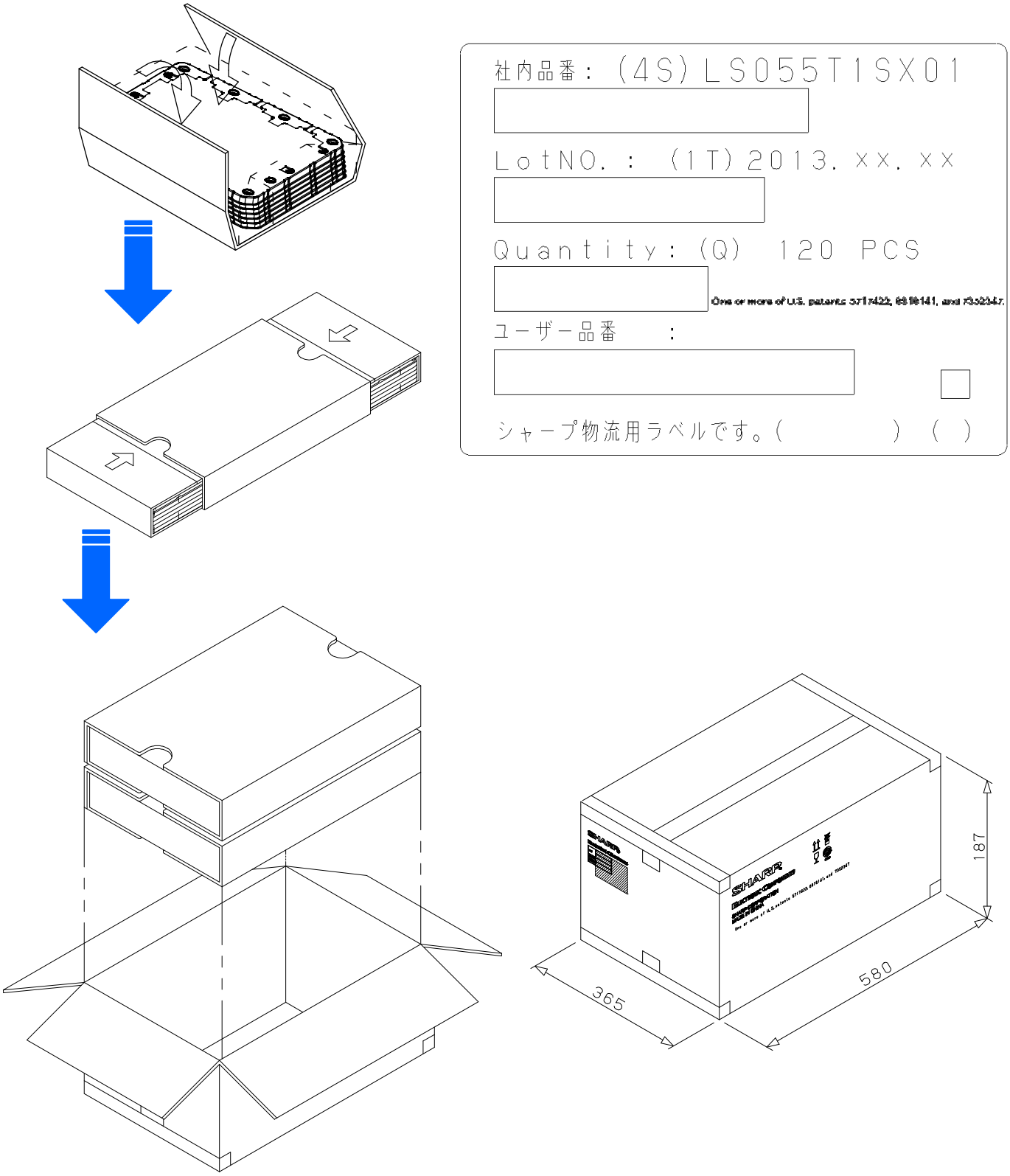

Fig. 12 Packaging style (Master carton for packaging)

12. Serial Number Label identification

Numbering is specified as follows.

3 C 000001 A Q

① ② ③ ④ ⑤

① product year (lower 1 digits)

3: 2013

4: 2014

② product month

A: January
B: February
C: March
:
I: September
J: October
K: November
L: December

③ serial number

000001 ～ 999999

④ Version number

⑤ factory code

13. LCD Module Code Rule

LS 055 T 1 S X 01

① ② ③ ④ ⑤ ⑥ ⑦

①Parts type

CGS LCD

②Active area size

5.54inch

③Dot format

FHD format

④LCD type

Transmissive

⑤Interface type

MIPI DSI 4 Lane

⑥Polarizer / LCD viewing type

Clear type / Wide viewing angle

⑦Serial Code

14. Outline dimensions

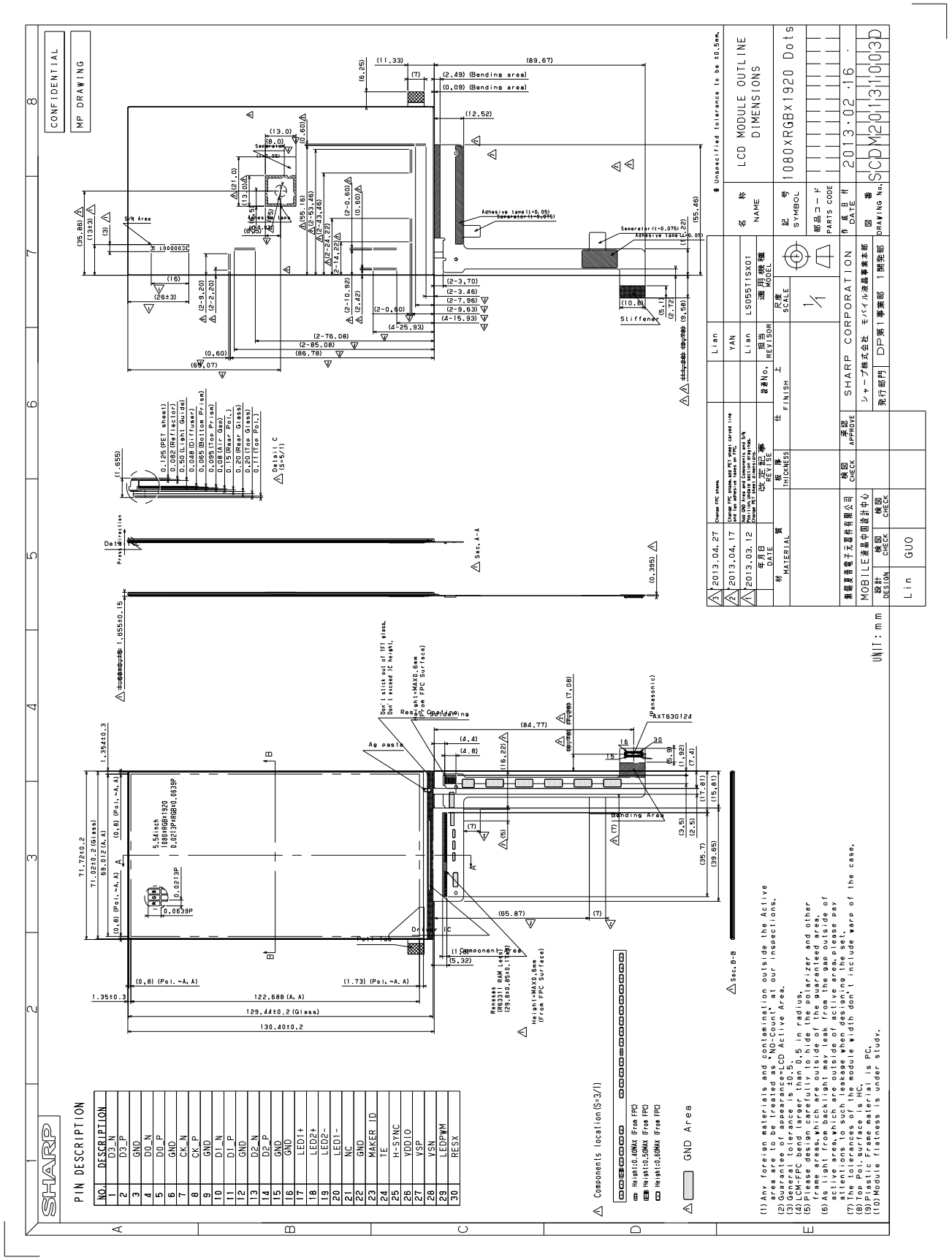

Fig. 13 Outline dimensions