RGB Interface

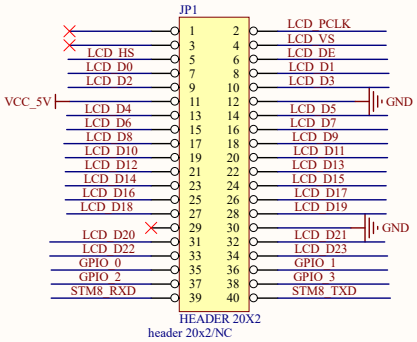

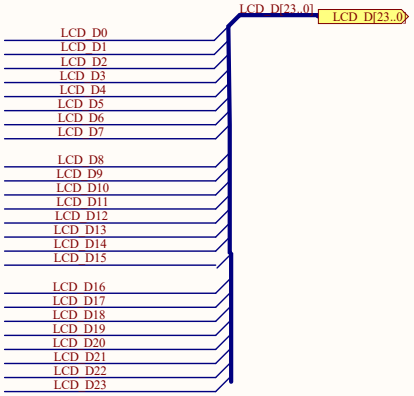

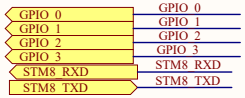

Title		
Size A3	Number	Revision
Date: 2017/12/3		Sheet of
File: D:\Project\..\HDMI_IN.SchDoc		Drawn By:

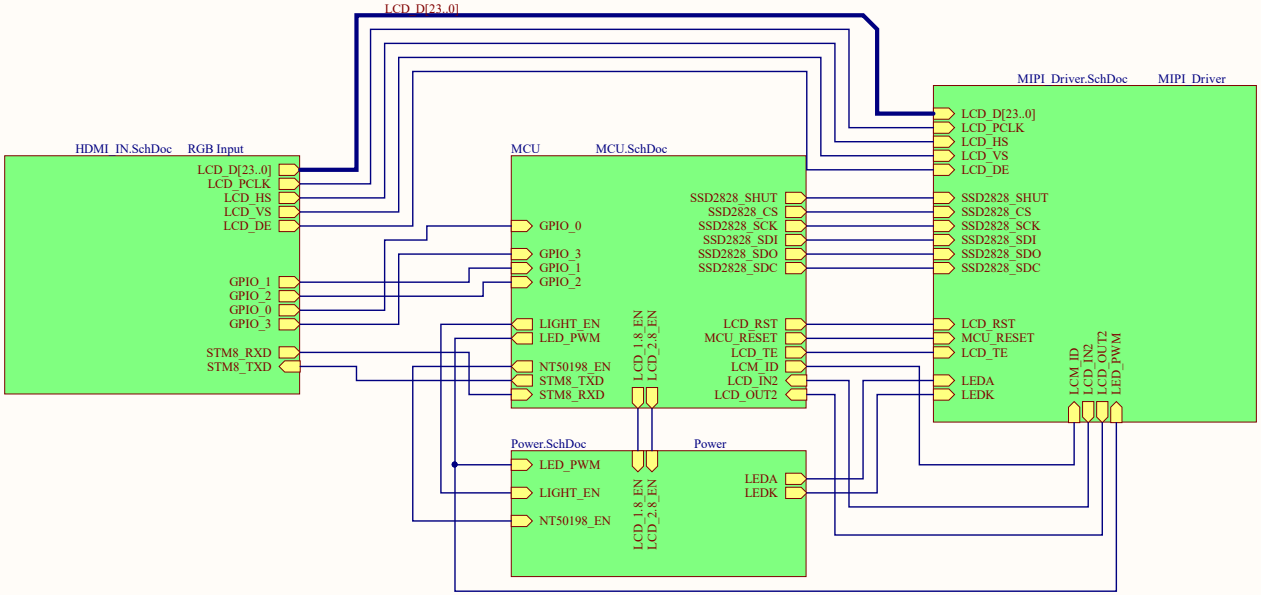

Title		
Size A3	Number	Revision
Date: 2017/12/3		Sheet of
File: D:\Project\..\HDMI_MIPI.SchDoc		Drawn By:

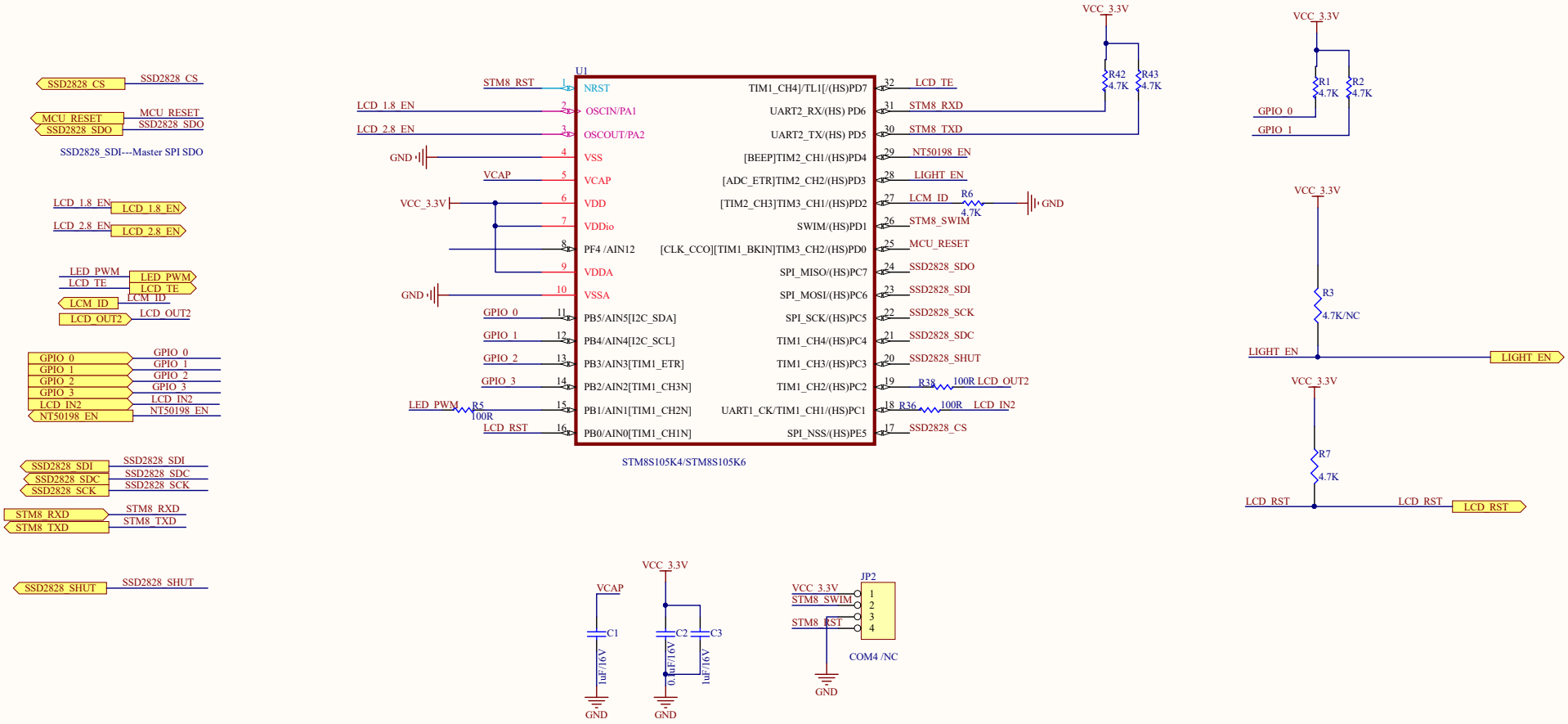

Title		
Size A3	Number	Revision
Date: 2017/12/3		Sheet of
File: D:\Project\..\MCU.SchDoc		Drawn By:

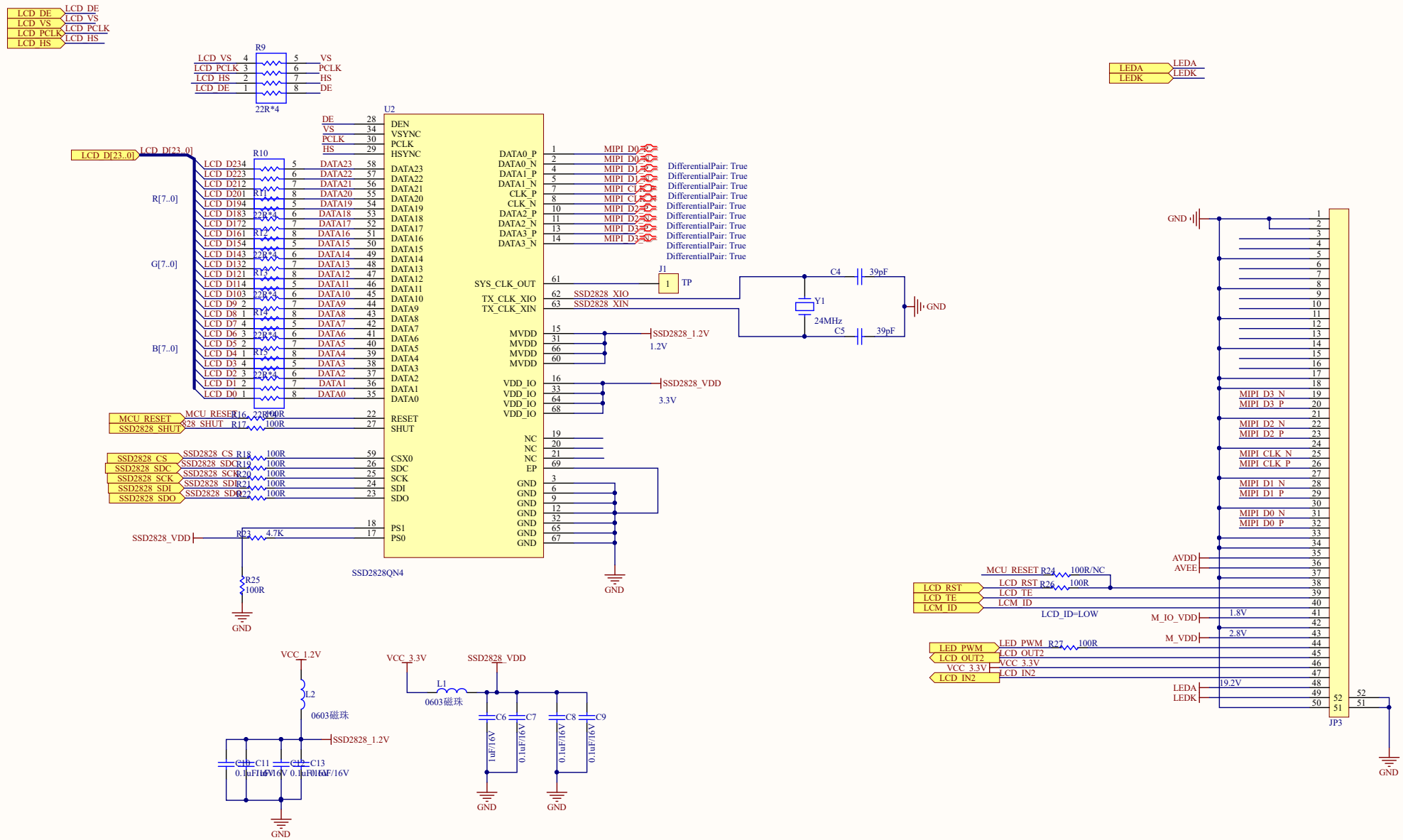

Title		
Size A3	Number	Revision
Date: 2017/12/3		Sheet of
File: D:\Project\..\MIPI_Driver.SchDoc		Drawn By:

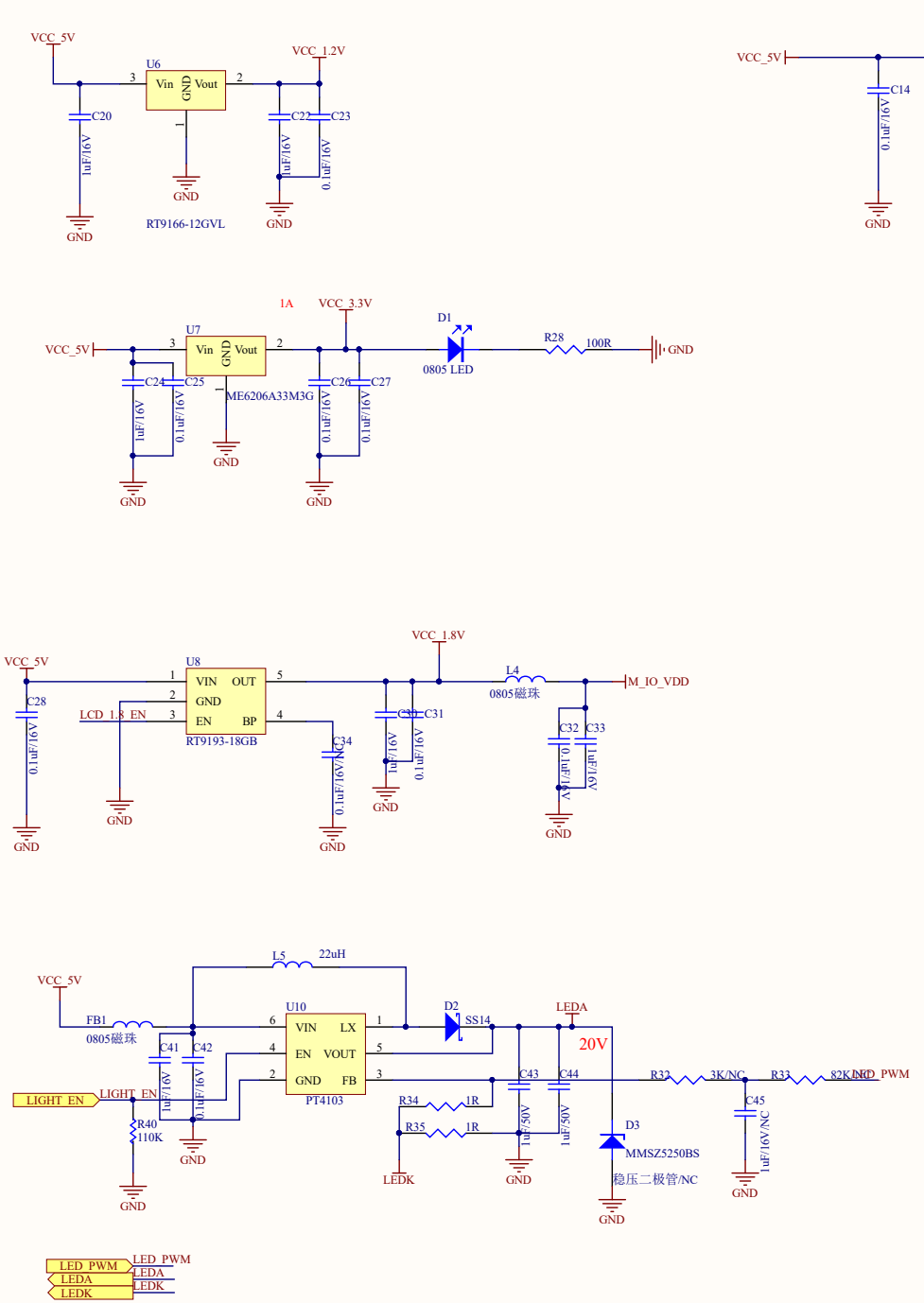

Title		
Size A3	Number	Revision
Date: 2017/12/3		Sheet of
File: D:\Project\..\Power.SchDoc		Drawn By: