深圳是晶彩科技有限公司

Shenzhen Jingcai Technology Co., Ltd

Product Specification

产品规格书

产品生产商：深圳市晶彩科技有限公司

产品名称 ：4.5寸480*854点阵彩屏模

规格型号 ：组HD45004C30

部门确认：

研发	工程	品管	审核

印　章：

日　期：

客户回签：

采购	工程	品管	确认

印　　章：

日　　期：

Table of Contents

REVISION HISTORY ····· **3**

1. **GENERAL DESCRIPTION** ····· **4**

1.1 DESCRIPTION ····· 4

1.2 GENERAL INFORMATION ····· 4

2. **ABSOLUTE MAXIMUM RATING** ····· **5**

3. **ELECTRICAL CHARACTERISTICS** ····· **6**

3.1 LCM DC CHARACTERISTICS ····· 6

3.2 BACK-LIGHT UNIT CHARACTERISTICS ····· 6

4. **OPTICAL CHARACTERISTICS** ····· **7**

5. **MODULE OUTLINE DIMENSION** ····· **10**

6. **MODULE INTERFACE DESCRIPTION** ····· **11**

7. **REFERENCE APPLICATION CIRCUIT** ····· **12**

8. **TIMINGS FOR MIPI Interface** ····· **13**

9. **RELIABILITY TEST CONDITIONS** ····· **14**

10. **PACKING** ····· **14**

11. **INSPECTION CRITERION** ····· **15**

12. **GENERAL PRECAUTIONS** ····· **19**

REVISION HISTORY

Rev	Description	Page	Date
1.0	Initial Release	All	2024-6-6

1. GENERAL DESCRIPTION

1.1 DESCRIPTION

HD45004C30 is a transmissive type color active matrix TFT (Thin Film Transistor) liquid crystal display (LCD) that uses amorphous silicon TFT as a switching device. This model is composed of a TFT-LCD module (TFT-LCD panel, driver IC and FPC), a back-light unit and. The resolution of 4.5" contains 480 RGB X854 pixels and can display up to 16.7m colors.

1.2 GENERAL INFORMATION

Items	Specification	Unit	Note
Drive element	a-Si TFT	-	-
LCM outline size	60 (H) x 109 (V)	mm	
Active area	55.44 (H) x 98.64 (V)	mm	-
Number of pixels	480(H)X854(V)	pixels	-
Pixel arrangement	RGB stripe	-	-
Pixel Pitch	0.1155x0.1155	um	-
Display color	16.7m color	color	-
Viewing direction	ALL	-	-
Controller / Driver	ST7701S	-	-
Data interface	MIPI	-	
Backlight	10 White LED	-	
Weight	TBD	g	

2. ABSOLUTE MAXIMUM RATING

(Ta=25±2°C, Vss=GND=0V)

Characteristics	Symbol	Min.	Typ	Max.	Unit	Notes
Supply Voltage	IOVCC	-0.3	-	4.6	V	
	VCI	-0.3	-	4.6	V	
TFT Gate On voltage	VGH	-0.3	-	30	V	
TFT Gate Off voltage	VGL	-0.3	-	30	V	
Backlight Forward Current	I_F	-		40	mA	
Operating Temperature	T_{OPR}	-20		+70	°C	(1), (3)
Storage Temperature	T_{STG}	-30		+80	°C	(2), (3)
Humidity	RH	-		90	%	Max. 60 °C

Notes:

(1) In case of below 0°C, the response time of liquid crystal (LC) becomes slower and the color of panel becomes darker than normal one. Level of retardation depends on temperature, because of the LC characteristics.

(2) If product is exposed to high temperatures for extended time, there is a possibility of the polarizer film damage which could degrade the optical characteristics.

(3) Permanent damage to the device may occur if maximum values are exceeded or reverse voltage is loaded.
Functional operation should be restricted to the conditions described under normal operating conditions.

3. ELECTRICAL CHARACTERISTICS

3.1 LCM DC CHARACTERISTICS

(Ta=25±2°C)

Characteristics	Symbol	Min.	Typ.	Max.	Unit	Note
Power Supply Voltage 1	IOVCC	1.65	1.8	3.3	V	
Power Supply Voltage 2	VCI	2.5	2.8	3.6	V	
Power Supply Voltage 3	-	-	-	-	V	
Power Supply for MTP	VPP	-	-	-	V	
Current Consumption	I_{DD}	-	TBD	-	mA	Normal mode
	$I_{DD\text{-}SLEEP}$		TBD		uA	Sleep mode
Input voltage “L” Level	V_{IL}	GND	-	0.3IOVCC	V	IOVCC=1.65~3.3
Input voltage “H” Level	V_{IH}	0.7IOVCC	-	IOVCC	V	
Output voltage “L” Level	V_{oL}	GND	-	0.2IOVCC	V	I_{OL}=1mA
Output voltage “H” Level	V_{oH}	0.8IOVCC	-	IOVCC	V	I_{OH}=-1mA

3.2 BACK-LIGHT UNIT CHARACTERISTICS

The back-light system is an edge-lighting type with 4 white LEDs. The characteristics of the back-light are shown in the following tables.

(Ta=25±2°C)

Characteristics	Symbol	Condition	Min.	Type	Max.	Unit	Notes
Forward Voltage	Vf	I_L=20mA	-	15	-	V	-
Forward current	I_L		-	40	-	mA	-
Luminance	Lv	I_L=20mA	--	350	--	cd/m^2	-
LED life time	-	I_L=20mA	20,000	25,000	--	Hr	Note 1

Note:

(1) The “LED life time” is defined as the module brightness decrease to 50% of original brightness at I_L=20mA. The LED life time could be decreased if operating I_L is larger than 20mA.

Bcklight circuit diagram shown in below:

4. OPTICAL CHARACTERISTICS

The following items are measured under stable conditions. The optical characteristics should be measured in a dark room.
Measuring equipment: BM-5AS, BM-7, EZ-Contrast.

(Ta=25±2°C)

Parameter		Symbol	Condition	Min.	Typ.	Max.	Unit	Note
Contrast Ratio (Center point)		C/R	-	550	700	-	-	BM-7 Note(2)
Luminance of white (Center point)		L_w	B/L on	15%	TBD	15%	cd/m^2	CA-210
Luminance uniformity		U_W	θ = 0. Normal viewing angle B/L On Note(1)	85	-	-	%	BM-7 Note(3)
Response Time		Tr + Tf		20	35	-	ms	BM-5AS Note(4)
Color Chromaticity (CIE 1931)	White	W_X		0.269	0.299	0.329	-	CA-210 Note(5)
		W_X		0.297	0.327	0.357		
	Red	R_X		0.634	0.664	0.694		
		R_Y		0.293	0.323	0.353		
	Green	G_X		0.257	0.287	0.317		
		G_y		0.563	0.593	0.623		
	Blue	B_X		0.104	0.134	0.164		
		B_Y		0.089	0.119	0.149		
Viewing Angle	Hor.	θ_T	C/R≥10	70	80	-	Deg	EZ Contrast Note(6)
		θ_B		70	80	-		
	Ver.	θ_L		70	80	-		
		θ_R		70	80	-		
Optima View Direction			ALL					Note(7)

* This condition will be changed by the evaluation circumstance. If product is exposed to high temperatures for extended time, there is a possibility of the polarizer film damage which could degrade the optical characteristics.

Notes:

(1) Test Equipment Setup: After stabilizing and leaving the panel alone at a given temperature for 30min, the measurement should be executed. Measurement should be executed in a stable, windless, and dark room 30min after lighting the back-light. This should be measured in the center of screen.

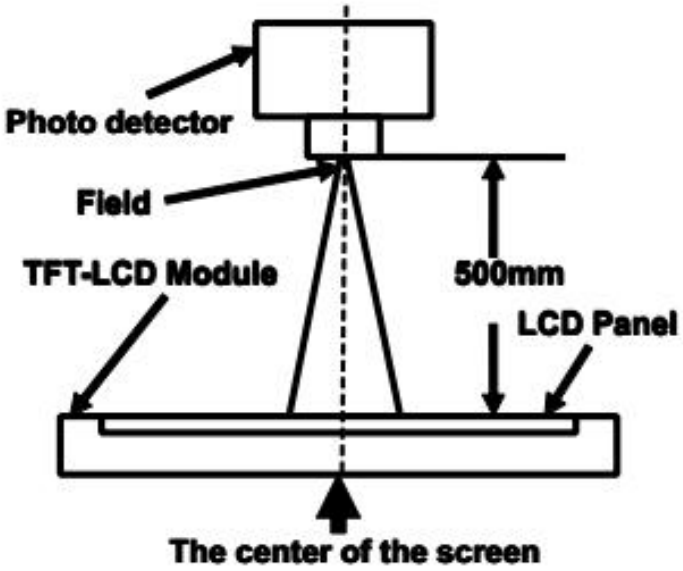

(2) Definition of Contrast Ratio (CR):

$$\text{Contrast Ratio (CR)} = \frac{\text{Luminance measured when LCD on the “white” state}}{\text{Luminance measured when LCD on the “black” state}}$$

(3) Definition of Luminance Uniformity: Active area is divided into 9 measuring areas (Shown in below), every measuring point is placed at the center of each measuring area.

$$\text{Luminance Uniformity} = \frac{\text{Min Luminance of white among 9-points}}{\text{Max Luminance of white among 9-points}} \times 100\%$$

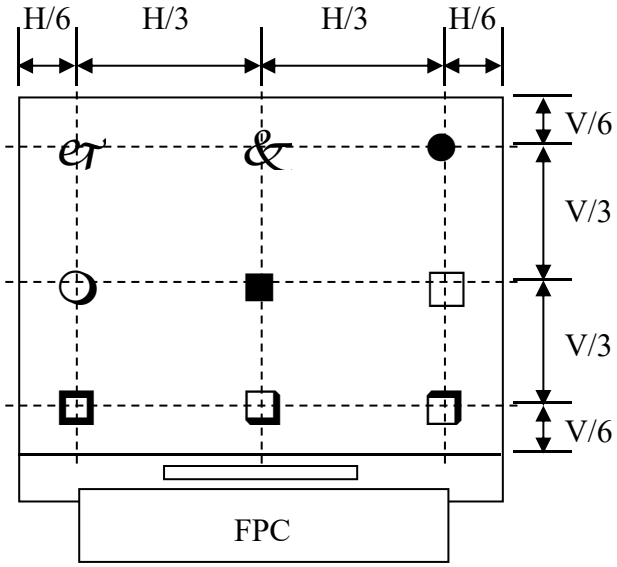

The spot locations for luminance measurement

(4) Definition of Response time:

The output signals of photo detector are measured when the input signals are Changed from “black” to “white” (rising time) and from time “white” to “black” (falling time), Respectively.

The response time is defined as the time interval between the 10% and 90% of Amplitudes. Refer to figure as below.

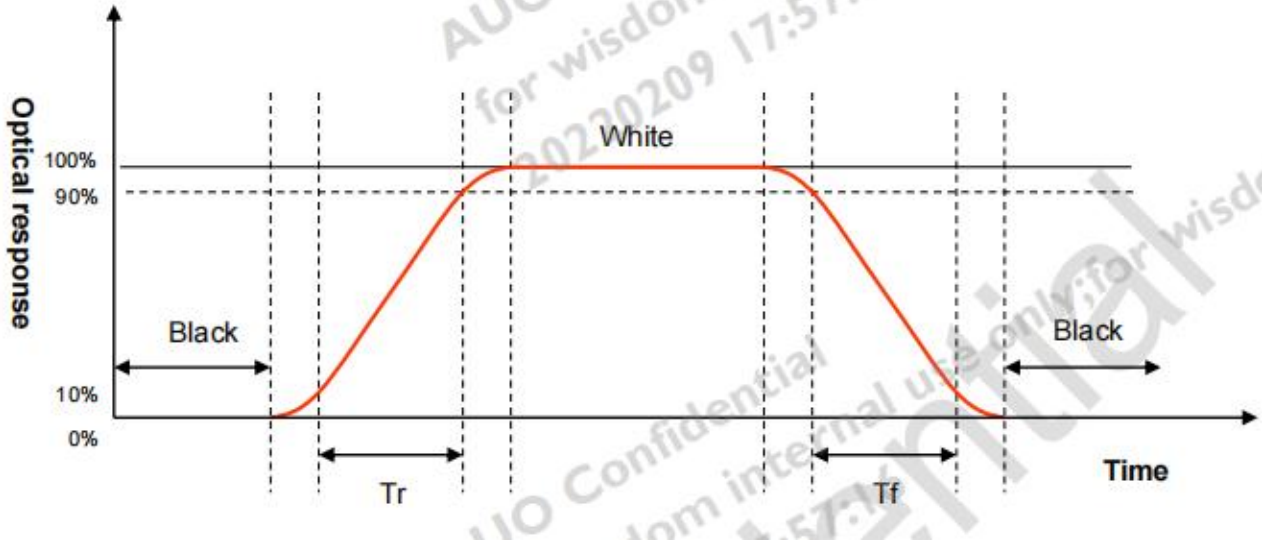

(5) Definition of viewing angle , 0 . Refer to figure as below

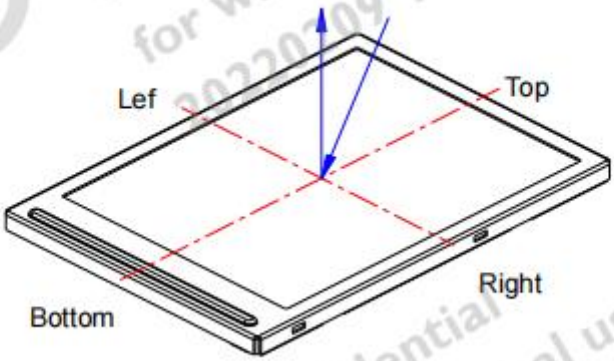

(6) Definition of Color Chromaticity (CIE 1931)
Color coordinate of white & red, green, blue at center point.

(7) The different Rubbing Direction will cause the different optima view direction.

5.MODULE OUTLINE DIMENSION

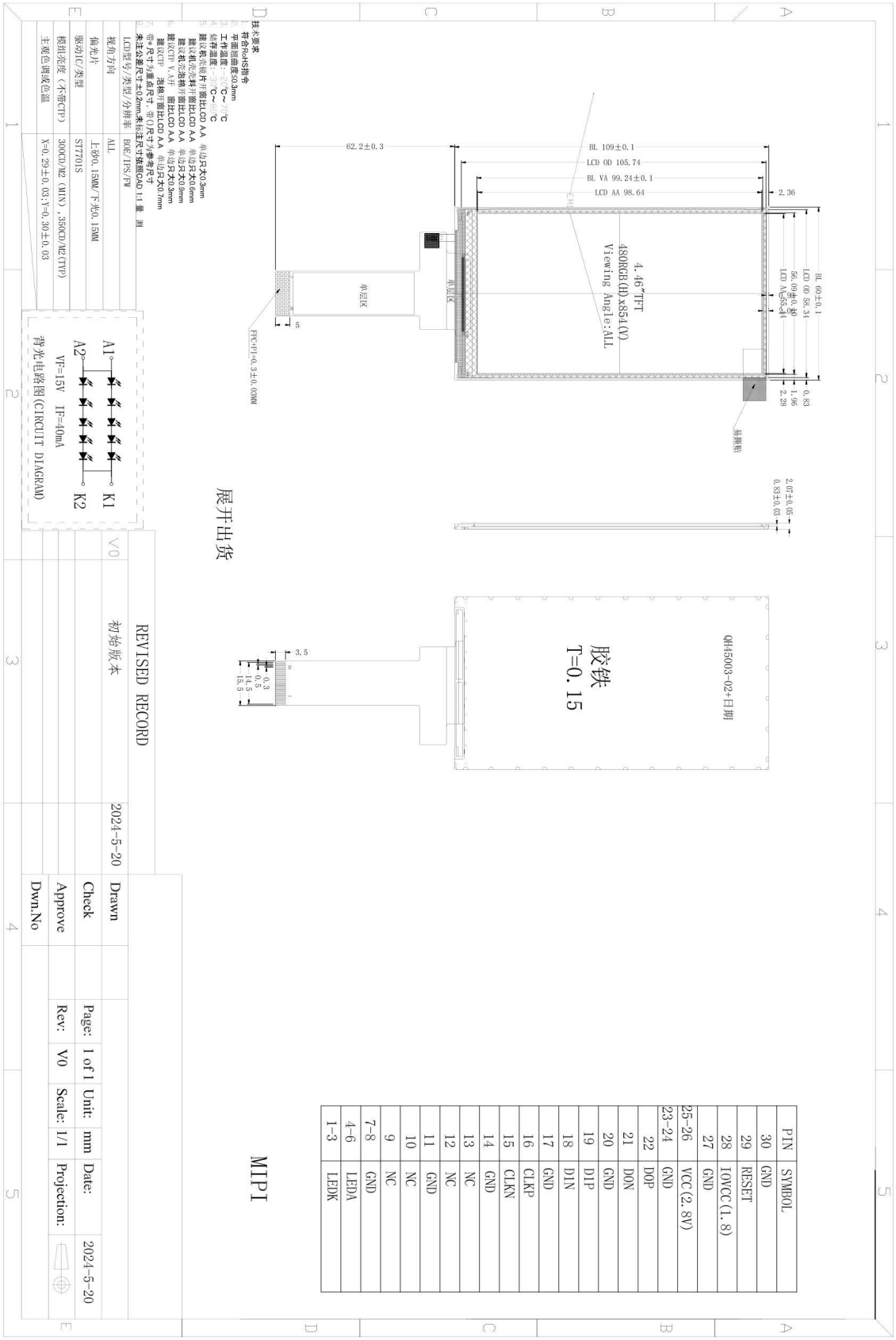

5.

6.MODULE INTERFACE DESCRIPTION

Pin No.	Symbol	Description
1	LEDK	Back-light Cathode
2	LEDK	Back-light Cathode
3	LEDK	Back-light Cathode
4	LEDA	Back-light Anode
5	LEDA	Back-light Anode
6	LEDA	Back-light Anode
7	GND	Power Ground
8	GND	Power Ground
9	D3N	MIPI-DSI data lane negative-end input pin
10	D3P	MIPI-DSI data lane positive-end input pin.
11	GND	Power Ground
12	D2N	MIPI-DSI data lane negative-end input pin
13	D2P	MIPI-DSI data lane positive-end input pin.
14	GND	Power Ground
15	CLKN	MIPI-DSI clock lane negative-end input pin
16	CLKP	MIPI-DSI clock lane positive-end input pin.
17	GND	Power Ground
18	D1N	MIPI-DSI data lane negative-end input pin
19	D1P	MIPI-DSI data lane positive-end input pin.
20	GND	Power Ground
21	D0N	MIPI-DSI data lane negative-end input pin
22	D0P	MIPI-DSI data lane positive-end input pin.
23	GND	Power Ground
24	GND	Power Ground
25	VCC	Power supply for I/O block. 2.8-3.3V
26	VCC	Power supply for I/O block. 2.8-3.3V

27	GND	Power Ground
28	IOVCC	Power supply for I/O block. 1.8V-3.3V
29	RST	Reset input pin
30	GND	Power Ground

7.REFERENCE APPLICATION CIRCUIT

Please consult our technical department for detail information

8.TIMINGS FOR MIPI Interface

7.5.4.1 High Speed Mode

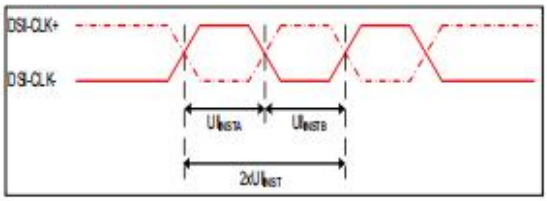

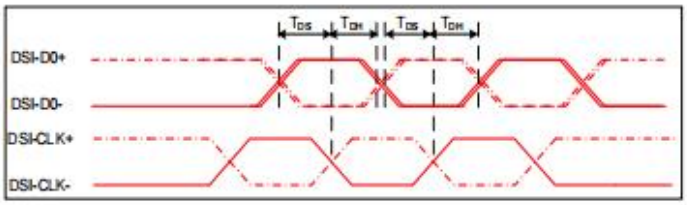

Figure 4 DSI clock channel timing

Figure 5 Rising and falling time on clock and data channel

VDDI=1.8,VDD=2.8, AGND=DGND=0V, Ta=25 ℃

Signal	Symbol	Parameter	MIN	MAX	Unit	Description
DSI-CLK+/-	$2xUI_{INSTA}$	Double UI instantaneous	4	25	ns	
DSI-CLK+/-	UI_{INSTA} UI_{INSTB}	UI instantaneous halfs	2	12.5	ns	$UI = UI_{INSTA} = UI_{INSTB}$
DSI-Dn+/-	tDS	Data to clock setup time	0.15	-	UI	
DSI-Dn+/-	tDH	Data to clock hold time	0.15	-	UI	

9.RELIABILITY TEST CONDITIONS

No.	Test Item	Test Condition	Notes
1	High Temperature Storage	+80°C / 240H	Inspection after 2~4h storage at room temperature, the sample shall be free from defects: 1. Air bubble in the LCD; 2. Seal leak; 3. Non-display; 4. Missing segments; 5.Glass crack; 6. The surface shall be free from damage. 7. The electrical characteristics requirements shall be satisfied.
2	Low Temperature Storage	-30°C / 240H	
3	High Temperature Operating	+70°C / 240H	
4	Low Temperature Operating	-20°C / 240H	
5	Temperature Cycle	Ta=-10°C~+25~+50°C,10 Cycle,per30min	
6	High Temperature /Humidity storage	60°C ,90%RH / 120H	
7	ESD test	Open Cell , Air mode , + 2 KV	

Remarks:

(1) The test samples should be applied to only one test item.

(2) Sample size for each test item is 5~10pcs.

(3) For High Temperature/Humidity storage test, pure water (resistance>10MΩ) should be used.

(4) In case of malfunction defect caused by ESD damage, if it would be recovered to normal state after resetting, it would be judge as a good part.

(5) Failure judgment criterion: basic specification, electrical characteristic, mechanical characteristic, optical characteristic.

10.PACKING SPECIFICATION

TBD

11.INSPECTION CRITERION

Inspection item			Judgement standard			
			Category		Acceptable number	
					A zone	B zone
1	Black spot, White spot, Bright Spot, Pinhole Foreign Particle, Bubble and Particle Between polarizer and glass, scratch on polarizer	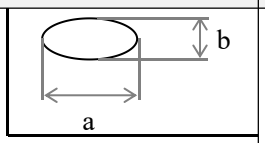 Φ=(a+b)/2(mm)	A B C	Φ≦0.10 0.10<Φ≦0.20 Φ>0.2	Ignored 2 0	Ignored
			Total defective point(B,C)		3	
	Pixel point defect	Bright spot		0.15<Φ≦0.20	N≤2	Ignored
		Dark spot/ Black spot		0.15<Φ≦0.20	N≤2	
		Attached to the two pixels are bright spots		0.15<Φ≦0.20	N≤2	
		Even a two pixel is dark		0.15<Φ≦0.20	N≤2	
		Pixel total number		0.15<Φ≦0.20	N≤2	
		Note1: the spot defect caused by foreign matter is judged according to the defect of the foreign body. Note 2: when the light is not wired to show the type of defects.				
2	Black line, White line, Bubble and Particle Between Polarizer and glass, Scratch on polarizer	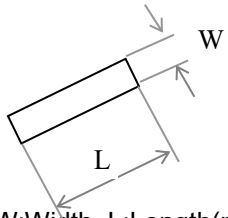 W:Width, L:Length(mm)	A B C	W≦0.03 L≦3.0 0.03<W≦0.05 L≦3.0 0.05<W	Ignored 2 0	Ignored
			Total defective point(B,C)		2	
3	Contrast variation	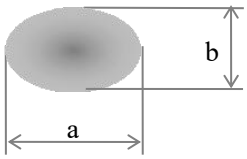 Φ=(a+b)/2(mm)	A B C	Φ≦0.1 0.1<Φ≦0.3 Φ>0.3	Ignored 2 0	Ignored
			Total defective point(B,C)		2	
4	Bubble inside cell		any size		none	none
5	Polarizer defect (if Polarizer is used)	Scratch and damage on polarizer, particle on polarizer or between polarizer and glass.	Refer to item 1 and item 2.			
		Bubble, dent and convex	A B C	Φ≦0.3 0.3<Φ≦0.5 0.5<Φ	Ignored 2 0	Ignored
			Total defective point(B,C)		2	

Inspection item		Judgement standard		
		Category	Acceptable number	
			A zone	B zone
6	Surplus glass	①Stage surplus glass 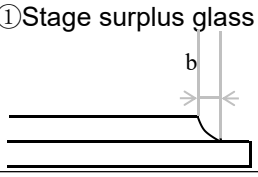	b≦0.3mm	
		②Surrounding surplus glass 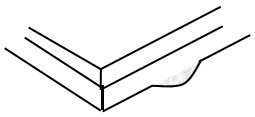	Should not influence outline dimension and assembling.	
7	MURA	①MURA	Naked eye examination: red, green, blue screen does not allow the appearance, black screen requires visual is not obvious, the specific reference limit samples. Note: the principle of closing the sample is to be installed on the whole machine and the end user will not find it in the normal usage scenario. Inspection basis: 6%ND (MURA mainly in the black screen and indoor light is relatively dark will be found, it is recommended to turn off the indoor lighting inspection.)	
		②Point Black / White / point(MURA)	1, under the black / gray screen check: D≦0.10mm Ignored; 0.10mm<D≦0.3mm, N≦2; D>0.3mm: Unqualified。 2, switch to the red, green, blue in which any one of the screen appears black or white or point to point white or point of failure. 	

Inspection item			Judgment standard Category(application: B zone)	
8	Glass defect crack	①The front of lead terminals 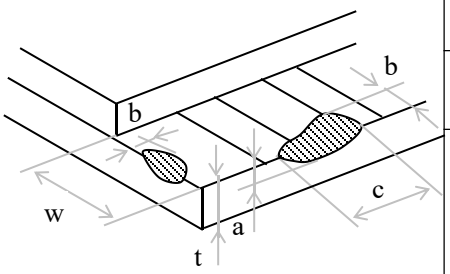 	A	If a≦t and b ≦1.0, c is not limited
			B	a≦t, 1≦b≦2mm, c≦3mm
			C	If glass crack cover alignment mark, b≦0.5mm.
			D	Crack at two sids of lead terminals should not cover patterns and alignment mark
		②Surrounding crack—non-contact side 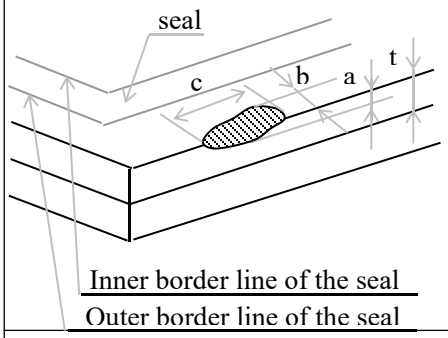 	b < Inner borderline of the seal	
		③ Surrounding crack— contact side 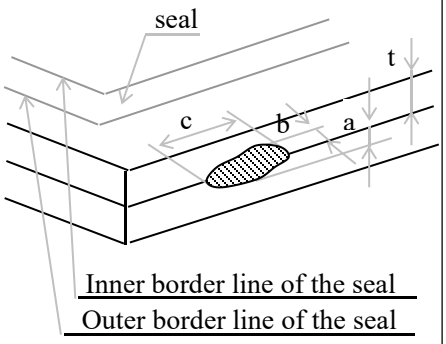 	b < Outer borderline of the seal	
		④Corner 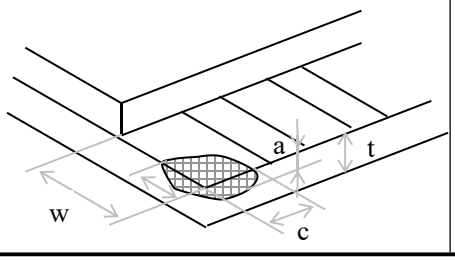 	A	a ≦ t, b ≦ 3.0, c ≦ 3.0
			*Glass crack should not cover patterns used for	

Inspection item			Judgement standard
9	FPC defect	Component soldering: No cold soldering, short/open circuit, burr, tin ball. The flat encapsulation component position deviation must be less than 1/2 width of the pin (Pic.1); The sheet component deviation: pin deviates from the pad and contact with the near components is not permitted（Pic.2）	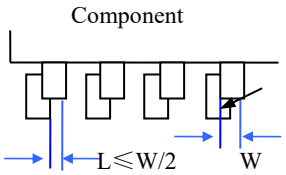
		lead defect: The lead lack must be less than 1/2of its width; The lead burr must be less than 1/2 of the seam; Impurities connect with the near leads is not permitted	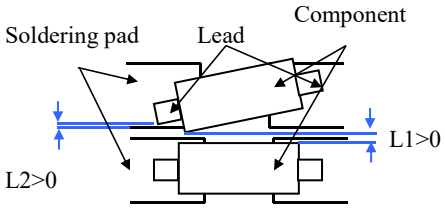
		Connector soldering: Soldering tin is at contact position of the plug and socket is not permitted No foundation is scald Serious cave distortion on plug and socket contact pin is not permitted	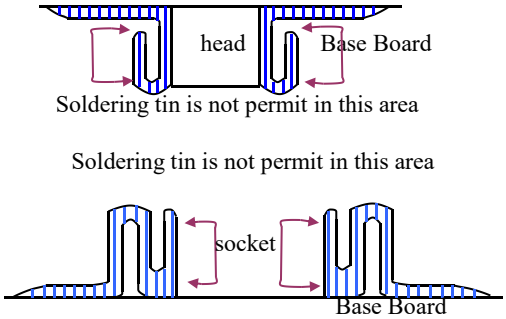

12.GENERAL PRECAUTIONS

1.1 HANDING

(1) When the module is assembled, it should be attached to the system firmly. Be careful not to twist and bent the module.

(2) Refrain from strong mechanical shock and / or any force to the module. In addition to damage, this may cause improper operation or damage to the module and back-light unit.

(3) Note that display modules are very fragile and could be easily damaged. Do not press or scratch the surface harder than a HB pencil lead.

(4) Wipe off water droplets or oil immediately. If you leave the droplets for a long time, straining and discoloration may occur.

(5) If the display module surface becomes contaminated, breathe on the surface and gently wipe it with a soft dry cloth. If it is heavily contaminated, should be wiped by moisten cloth with isopropyl alcohol or ethyl alcohol solvents, DO NOT with water, ketone type materials (e.g. acetone), aromatic, toluene, ethyl acid or methyl chloride, and so on.

(6) If the liquid crystal material leaks from the panel, it should be kept away from the eyes or mouth. In case of contact with hands, legs or clothes, it must be washed away thoroughly with soap.

(7) Use finger-stalls with sort gloves in order to keep display clean during the incoming inspection and assembly process.

(8) Protection film for polarizer on the module shall be slowly peeled off just before use so that the electrostatic charge can be minimized.

(9) Do not touch directly conductive parts such as the CMOS LSI pad and the interface terminals with bare hands, therefore operations should be grounded whenever he/she comes into contact with the modules.

(10) Do not exceed the absolute maximum rating value. (The supply voltage variation, input voltage variation, variation in part contents and environmental temperature, and so on), otherwise the module may be damaged.

1.2 SOLDERING

(1) Use soldering irons with proper grounding and no leakage.

(2) For No RoHS Product: soldering temperature is 290~350°C, soldering time is 3~5s; for RoHS Product: soldering temperature is 340~370°C, soldering time is 3~5s.

(3) If soldering flux is used, be sure to remove any remaining flux after soldering (This does not apply in the case of a non-halogen type of flux).

1.3 STORAGE

(1) DO NOT leave the module in high temperature and high humidity for a long times, keep the temperature from 0°C to 35°C and relative humidity of less than 60%.

(2) It is highly recommended to store the module in a dark place. The Liquid crystal is deteriorated by ultraviolet, DO NOT leave it in direct sunlight and strong ultraviolet ray for many hours.