EK79007AD2

Rev. 1.1

DATA SHEET

1536-Output Source Driver with TCON MIPI Interface

fitipower integrated technology Inc.

Table of Contents

Page

1. GENERAL DESCRIPTION 3
2. FEATURES 3
3. BLOCK DIAGRAM 4
4. APPLICATION BLOCK DIAGRAM 5
   4.1. Dual Gate (1024RGB x 600) 5
5. PAD SEQUENCE 6
6. APPLICATION POWER CIRCUIT 7
7. PIN DESCRIPTION 8
   7.1. Value of wiring resistance to each pin 111
8. MIPI INTERFACE (MOBILE INDUSTRY PROCESSING INTERFACE) 12
   8.1. Display Module Pin Configuration for DSI 13
   8.2. Display Serial Interface (DSI) 16
9. COMMAND DESCRIPTION 21
   9.1. MIPI Control Register 21
10. FUNCTION DESCRIPTION 28
   10.1. Power On/Off Sequence 28
   10.2. Input Data VS Output Voltage 29
   10.3. Input Data and Output Voltage Reference Table 29
   10.4. Input Timing Table (4Lane) 32
   10.5. Input Timing Table (2Lane) 37
11. ABSOLUTE MAXIMUM RATING 38
12. RECOMMENDED OPERATING RANGE 39
13. DC ELECTRICAL CHARACTERISTICS 39
   13.1. Basic DC Characteristic 39
   13.2. MIPI Interface DC Characteristic 41
   13.3. Power Block DC Characteristic 42
14. AC ELECTRICAL CHARACTERISTIC 43
   14.1. Basic AC Characteristic 43
   14.2. MIPI AC Characteristic 44
   14.3. Output Timing Table 54
15. CHIP OUTLINE DIMENSIONS 56
   15.1. Alignment Mark 57
16. PAD COORDINATE 58
17. REVISION HISTORY 74

FITIPOWER CONFIDENTIAL
NO DISCLOSURE

Single Chip 1536 Channel Source Driver with Timing Controller for 1024(RGB) × 600 TFT LCD

1. GENERAL DESCRIPTION

The EK79007AD is a highly integrated solution for small size to middle size a-Si TFT-LCD panels. This chip integrates 1536ch source driver with MIPI input interface.

2. FEATURES

- Special design for middle size TFT LCD Panel with MIPI interface
- Integrate 1536 channel source driver and timing controller with dual gate function
- Support panel resolution (HxV):1024(RGB)x768, 1024(RGB)x600, 800(RGB)x600,800(RGB)x480
- 8-bit resolution 256 gray-scale with dithering(6-bits DAC +2 bits FRC or HFRC)
- Power for MIPI circuit(VDD_IF): 1.8V
- Power for digital circuit(VDD): 1.8V
- Power for analog circuit(AVDD): 8.0V ~ 13.5V
- Support interface: MIPI (4lane/3lane/2lane)
- Embedded Gamma Table for special customer request
- V1~V14 for adjusting Gamma correction
- 1+2 dot inversion architecture
- Built-In VCOM buffer
- Built-In AUTO pattern
- Built-In SDRRS function
- Support no_clock detection
- COG package
- Chip size = 24975um * 695um
- bump height=9um
- Output bump pitch = 15um

FITIPOWER CONFIDENTIAL
NO DISCLOSURE

3. BLOCK DIAGRAM

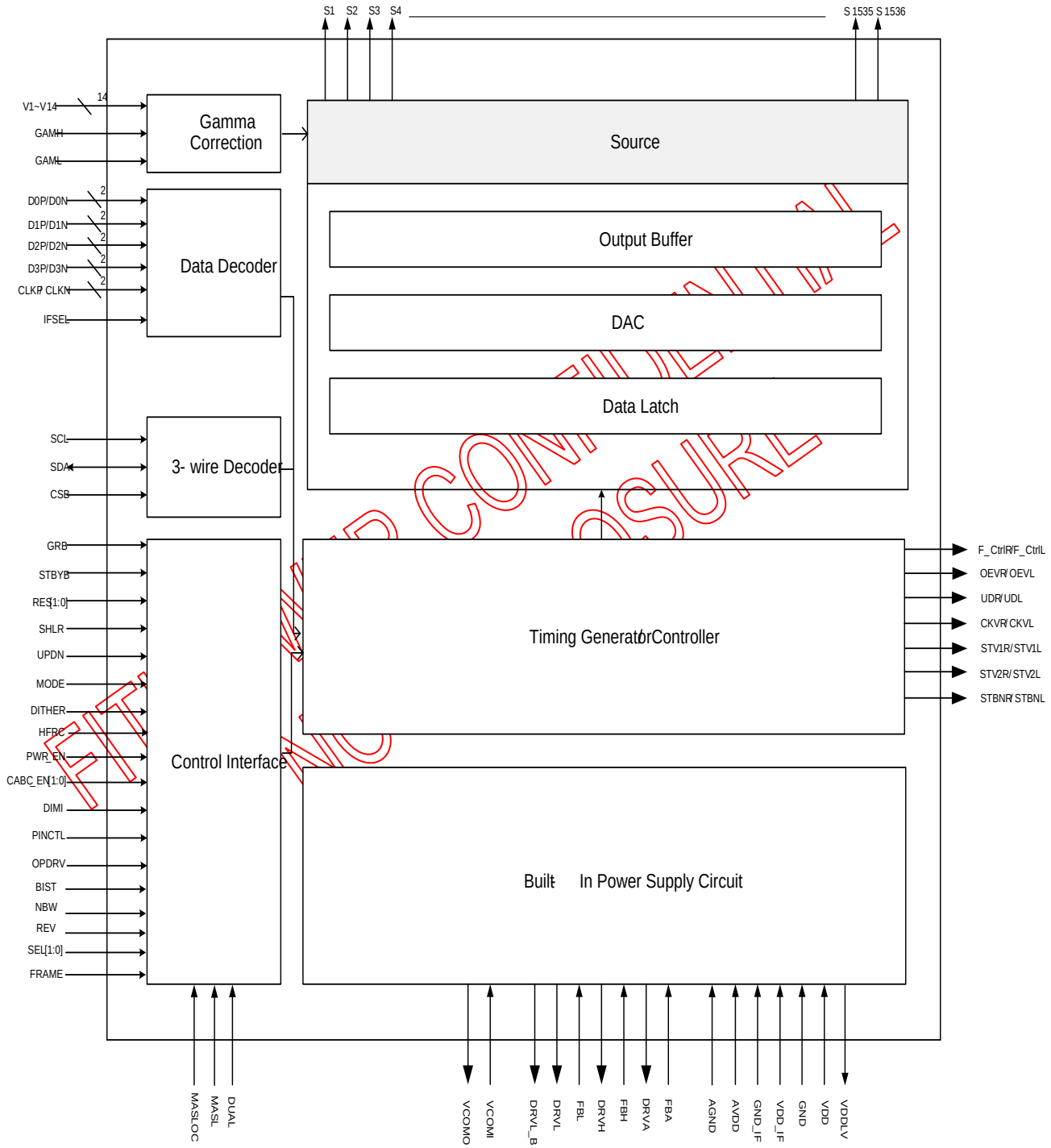

4. APPLICATION BLOCK DIAGRAM

4.1. Dual Gate (1024RGB x 600)

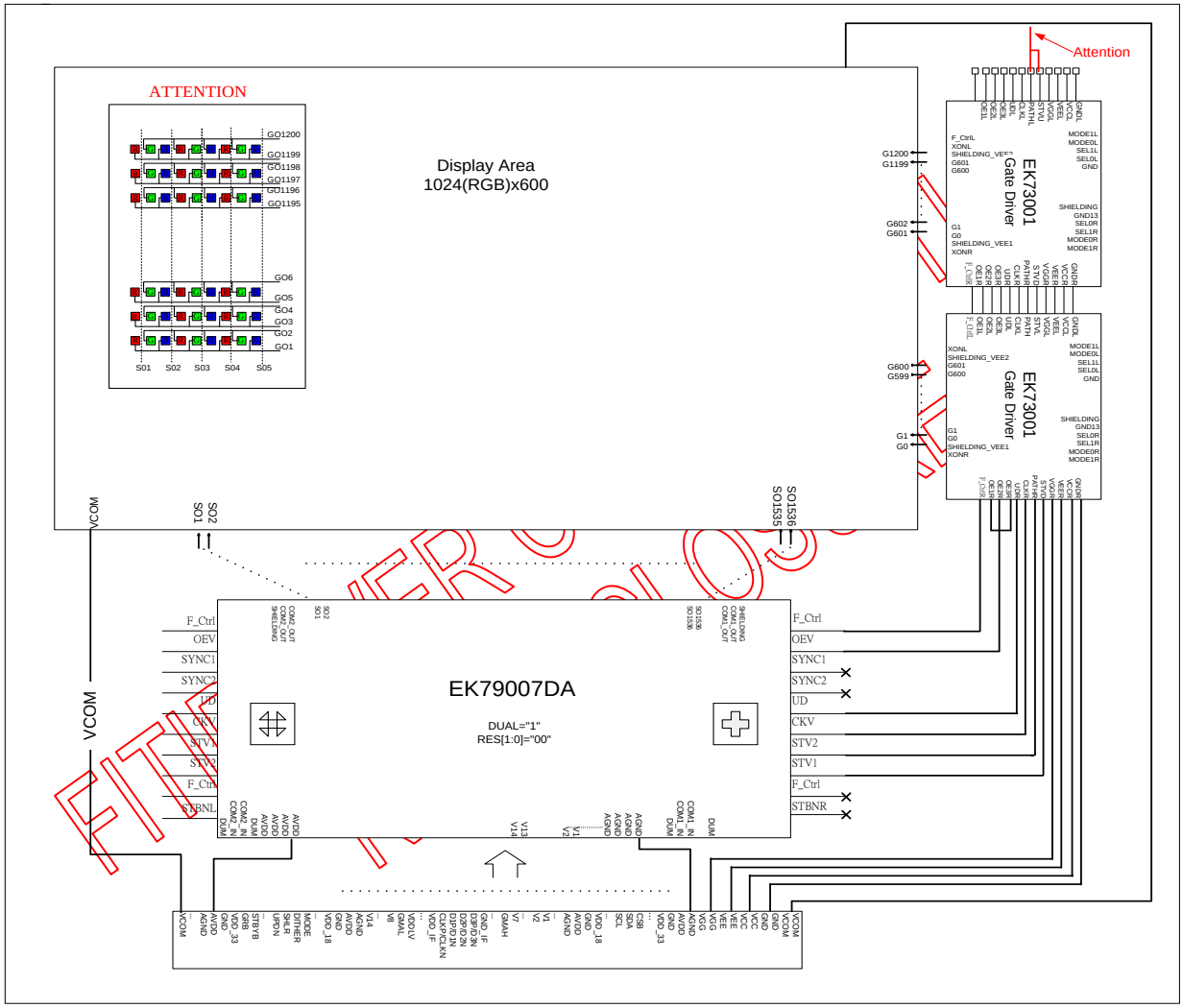

5. PAD SEQUENCE

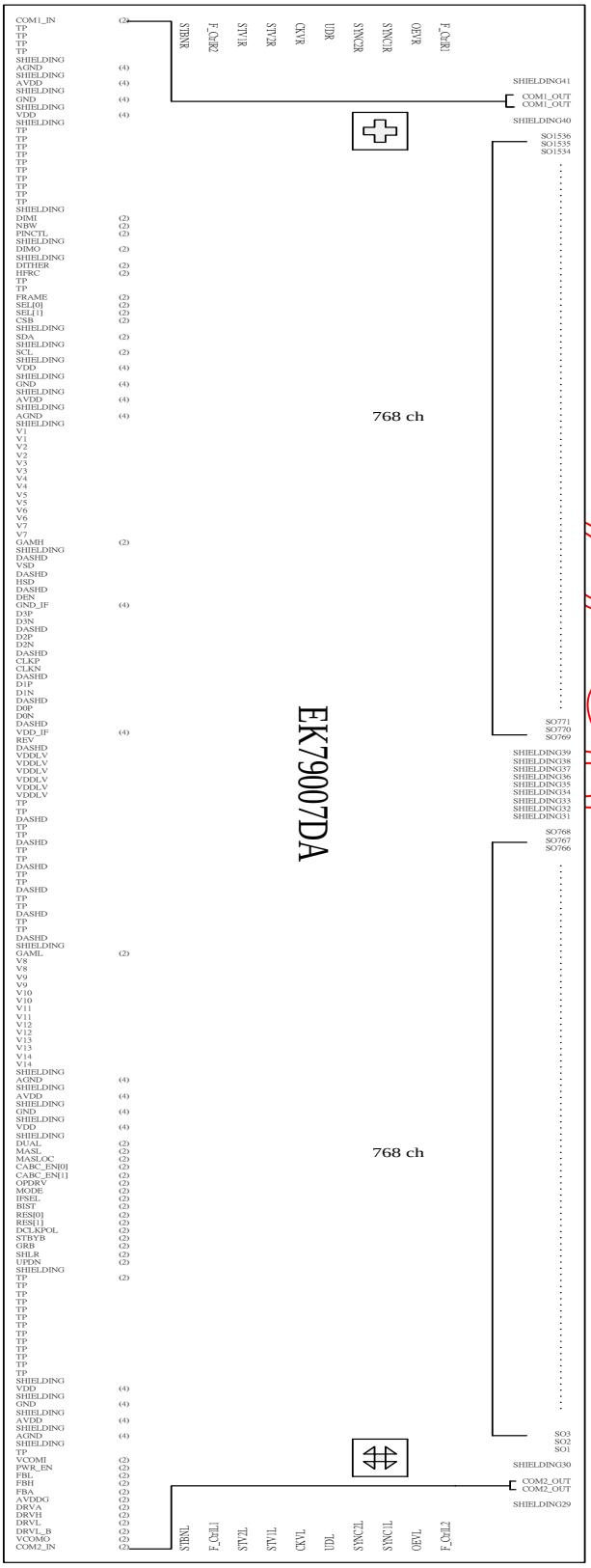

CONFIDENTIAL
DISCLOSURE

6. APPLICATION POWER CIRCUIT

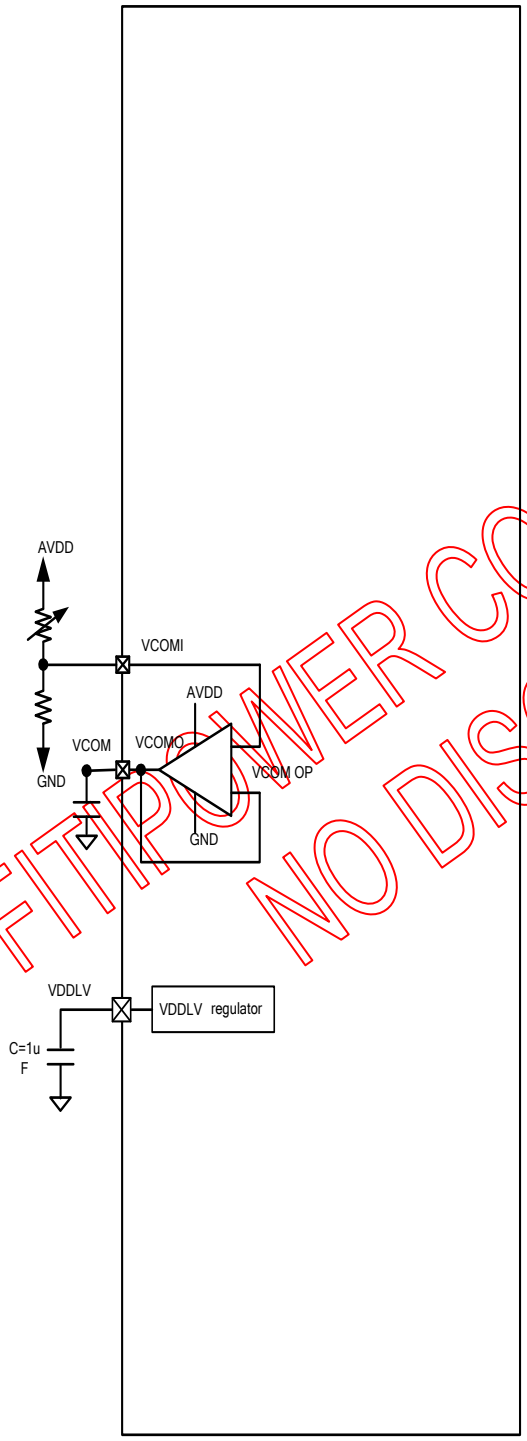

FITIPOWER CONFIDENTIAL
NO DISCLOSURE

7. PIN DESCRIPTION

Pin Name	Pin Type	Description
D0P/D0N D1P/D1N D2P/D2N D3P/D3N	Input	MIPI data input.
CLKP/CLKN	Input	MIPI clock input.
RES[1:0]	Input	RES[1:0]=“01”,for 1024(RGB)*768 display resolution RES[1:0]=“00”,for1024(RGB)*600 display resolution (default) RES[1:0]=“10”,for 800(RGB)*600 display resolution (601~936 channel disable) RES[1:0]=“11”, for 800(RGB)*480 display resolution (601~936 channel disable)
DITHER	Input	Dithering function enable control. DITHER = ”H” , Enable internal dithering function DITHER = ”L” , Disable internal dithering function.(default).
HFRC	Input	H-FRC selection. HFRC = ”L” : H-FRC disable(default) HFRC = ”H” : H-FRC enable If “DITHER”=”L” , disable dithering function(HFRC and FRC disable)
DUAL	Input	Dual Gate function enables control. Normally pull high DUAL = ”H” , Enable Dual Gate Function. (Default) DUAL = ”L” , TBD
V1~V14	Input	When INTERNAL Gamma Table is used. GAMH tied to AVDD , GAML tied to GND and V1~V14 pad are un-used. When using external gamma voltage, GAMH and GAML are floating , and V1~V14 are the external gamma correction points. The voltage of these pins must be: AGND<V14<V13<V12<V11<V10<V9<V8;V7<V6<V5<V4<V3<V2<V1<AVDD .
GAMH	Input	GMAH tied to AVDD
GAML	Input	GMAL tied to GND via resistor.
GRB	Input	Global reset pin. Active Low to enter Reset State. Normally pull high. Connecting with an RC reset circuit for stability.
STBYB	Input	Standby mode. STBYB = ”H” ,normal operation(default) STBYB = ”L” , timing controller, source driver will turn off, all output are GND.

FITIPOWER CONFIDENTIAL
NO DISCLOSURE

Pin Name	Pin Type	Description
SHLR	Input	Source right or left sequence control. SHLR = ”L” , shift left: last data = S1←S2←S3……...←S1536 = first data. SHLR = ”H” , shift right: first data = S1→S2→S3……..→S1536 = last data.(default)
UPDN	Input	Gate up or down scan control. UPDN = ”L” , STV2 output vertical start pulse and UD pin output logica “L” to Gate driver. (default) UPDN = ”H” , STV1 output vertical start pulse and UD pin output logica “H” to Gate driver
BIST	Input	Normal Operation/BIST pattern select. BIST = ”H” : BIST(DCLK input is not needed) BIST = ”L” : Normal Operation(default)
NBW	Input	Normally black or normally white setting. NBW = ”H” : Normally black NBW = ”L” : Normally white(default)
REV	Input	Controls whether the data of R[7:0]/G[7:0]/B[7:0] are inverted or not, normally pulled low. When REV=”H” these data will be inverted. EX. “00”→“ 3F”, “07”→“ 38”, “15”→“2A”, and so on.
FRAME	Input	Frame inverse or not select. Normally pull low. FRAME = ”H” , Uniform FRAME = ”L” , Frame inverse (Default)
SEL[1:0]	Input	Gate on sequence select. Normally pull low SEL[1] / SEL[0] / Pin control function 1 / 1 / Z+2 1 / 0 / 2 0 / 1 / 2 0 / 0 / Z(default)
OEVR/OEVL	Output	Gate driver control signal
UDR/UDL	Output	Gate driver control signal
CKVR/CKVL	Output	Gate driver control signal
STV1R/STV1L	Output	Gate driver control signal
STV2R/STV2L	Output	Gate driver control signal
STBNR/STBNL	Output	Gate driver control signal
F_CtrlR/F_CtrlL	Output	Gate driver control signal (For special Gate on sequence). In Dual Gate structure , connect this pin to gate driver’s F_Ctrl.
DIMI	Input	Brightness control signal. Normally pull high.
DIMO	Output	Backlight dimmer signal for external controller. DIMO = ”L” , Turn off external backlight controller DIMO = ”H” , Logical control signal to turn on external backlight controller NOTE : If CABC OFF , DIMO = DIMI . Else DIMO is controlled by CABC

FITIPOWER CONFIDENTIAL
NO DISCLOSURE

Pin Name	Pin Type	Description
PINCTL	Input	Enable pin control function. (for MIPI) PINCTL="L" , Disable pin control function. The following pin will be inactive: MIPI IF:SHLR, HFRC,DITHER,BIST,NBW,PWR_EN,REV, RES[1:0]. PINCTL="H" , Enable pin control function.(default)
OPDRV	Input	Source OP driving selection. OPDRV = "H" : 133% OPDRV = "L" : normal.(default)
LVBIT	Input	please floating
LVFMT	Input	please floating
AVDD	PI	Power supply for analog circuits
AGND	PI	Ground pins for analog circuits
GND	PI	Ground pins for digital circuits
VDD	PI	Power supply for digital circuits
VDD_IF	PI	MIPI power
GND_IF	PI	MIPI ground
VDDLV	PO	VDDLP LDO output for MIPI LP mode TX use. VDDLP LDO enable on MIPI Interface.
PWR_EN	Input	PWR_EN = "H", enable VCOM buffer PWR_EN = "L", disable VCOM buffer(default)
VCOMI	Input	VCOM buffer in
VCOMO	Output	VCOM buffer out
SO1~SO1536	Output	Source Driver Output Signals All outputs will be of unknown values under stand-by mode.
COM1_IN COM1_OUT	S	Internal link together between input side and output side
COM2_IN COM2_OUT	S	Internal link together between input side and output side.
SHIELDING	SH	Those pins are internally connected to the AGND. DO NOT connect to any WOA on the panel. Data Bus Shielding pad
DASHD	SH	Those pins are internally connected to the GND. RECOMMAND to add shielding lines on the FPC to reduce EMI.
TP1~TP45	T	DO NOT connect to any WOA on the panel and floating on panel.

Note:
P: Power, D: Dummy, S: Shorted line, M: Mark, PI: Power input, PO: Power output,
T: Testing, SH: Shielding, PS: Power Setting, C: Capacitor pin.

Pass Line Description:

Pass Line No.	Pad Name	
1	COM1_IN	COM1_OUT
2	COM2_IN	COM2_OUT

FITIPOWER CONFIDENTIAL
NO DISCLOSURE

7.1. Value of wiring resistance to each pin

The recommended wiring resistance values are shown below. The wiring resistance values affect the current capacity of the power supply, so be sure to design using values that do not exceed those recommended.

Source wiring:

Pin name	Wiring resistance value(Ω)	Pin name	Wiring resistance value(Ω)
AVDD	<5	FRAME	<100
AGND	<5	SEL[1:0]	<100
VDD_IF	<5	REV	<100
VDD	<5	CABC_EN[1:0]	<100
GND_IF	<5	OPDRV	<100
VDDLV	<5	BIST	<100
GND	<5	RES[1:0]	<100
V1~V14	<5	DCLKPOL	<100
DRVX	<5	STBYB	<100
FBX	<5	GRB	<100
VCOMI	<5	SHLR	<100
VCOMO	<5	UPDN	<100
D0P/D0N	<5	PINCTL	<100
D1P/D1N	<5	DUAL(Reserved)	<100
D2P/D2N	<5	MASL(Reserved)	<100
D3P/D3N	<5	MASLOC(Reserved)	<100
CLKP/CLKN	<5	MODE(Reserved)	<100
DIMI	<100	LVFMT	<100
DIMO	<100	LVBIT	<100
NBW	<100	DEN(Reserved)	<100
PINCTL	<100		
DITHER	<100		
IFSEL	<100		
HFRC	<100		

Gate wiring:

Pin name	Wiring resistance value(Ω)	Pin name	Wiring resistance value(Ω)
VGH	<50	OEVX	<100
VGL	<30	UDX	<100
VCC	<50	CKVX	<100
GND	<40	STBNX	<100
STV1X/STV2X	<100	F_CtrlX	<100

FITIPOWER CONFIDENTIAL
NO DISCLOSURE

8. MIPI INTERFACE (MOBILE INDUSTRY PROCESSING INTERFACE)

The Display Serial Interface standard defines protocols between a host processor and peripheral devices that adhere to MIPI Alliance standards for mobile device interfaces. The DSI standard builds on existing standards by adopting pixel formats and command set defined in MIPI Alliance standards.

DSI-compliant peripherals support either of two basic modes of operation: Command Mode and Video Mode. Which mode is used depends on the architecture and capabilities of the peripheral. The mode definitions reflect the primary intended use of DSI for display interconnect, but are not intended to restrict DSI from operating in other applications.

Command Mode refers to operation in which transactions primarily take the form of sending commands and data to a peripheral, such as a display module, that incorporates a display controller. The display controller may include local registers. Systems using Command Mode write to, and read from, the registers. The host processor indirectly controls activity at the peripheral by sending commands, parameters and data to the display controller. The host processor can also read display module status information. Command Mode operation requires a bidirectional interface.

Video Mode refers to operation in which transfers from the host processor to the peripheral take the form of a real-time pixel stream. In normal operation, the display module relies on the host processor to provide image data at sufficient bandwidth to avoid flicker or other visible artifacts in the displayed image. Video information should only be transmitted using High Speed Mode. To reduce complexity and cost, systems that only operate in Video Mode may use a unidirectional data path.

MIPI Lane Configuration:

	MCU (Master) Display Module (Slave)
Clock Lane	Unidirectional Lane • Clock Only • Escape Mode(ULPS Only)
Data Lane0	Bi-directional Lane ● Forward High-Speed ● Bi-directional Escape Mode ● Bi-directional LPDT
Data Lane1	Unidirectional ● Forward High speed
Data Lane2	Unidirectional ● Forward High speed
Data Lane3	Unidirectional ● Forward High speed

FITIPOWER CONFIDENTIAL NO DISCLOSURE

8.1. Display Module Pin Configuration for DSI

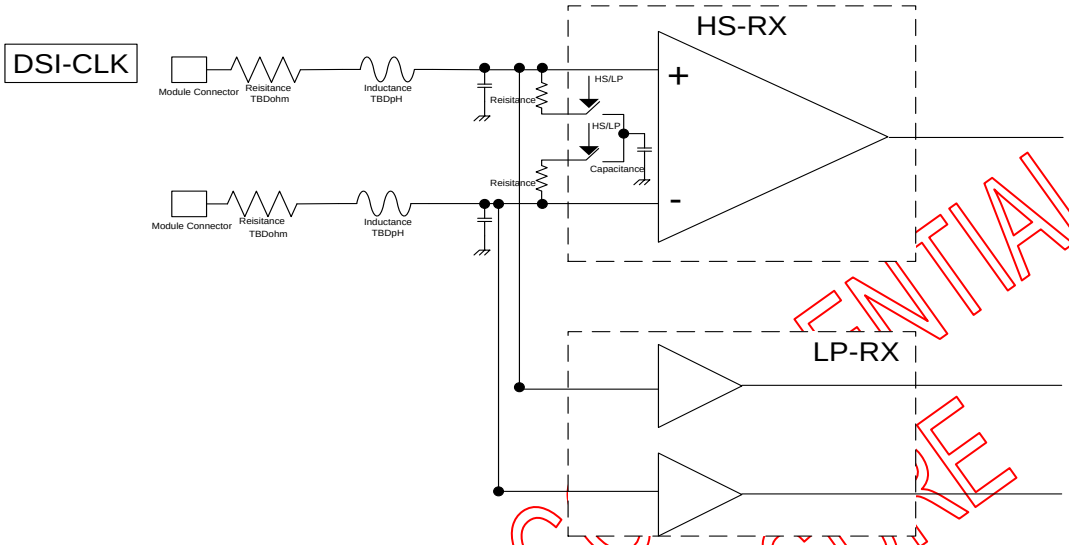

FITIPOWER CONFIDENTIAL
NO DISCLOSURE

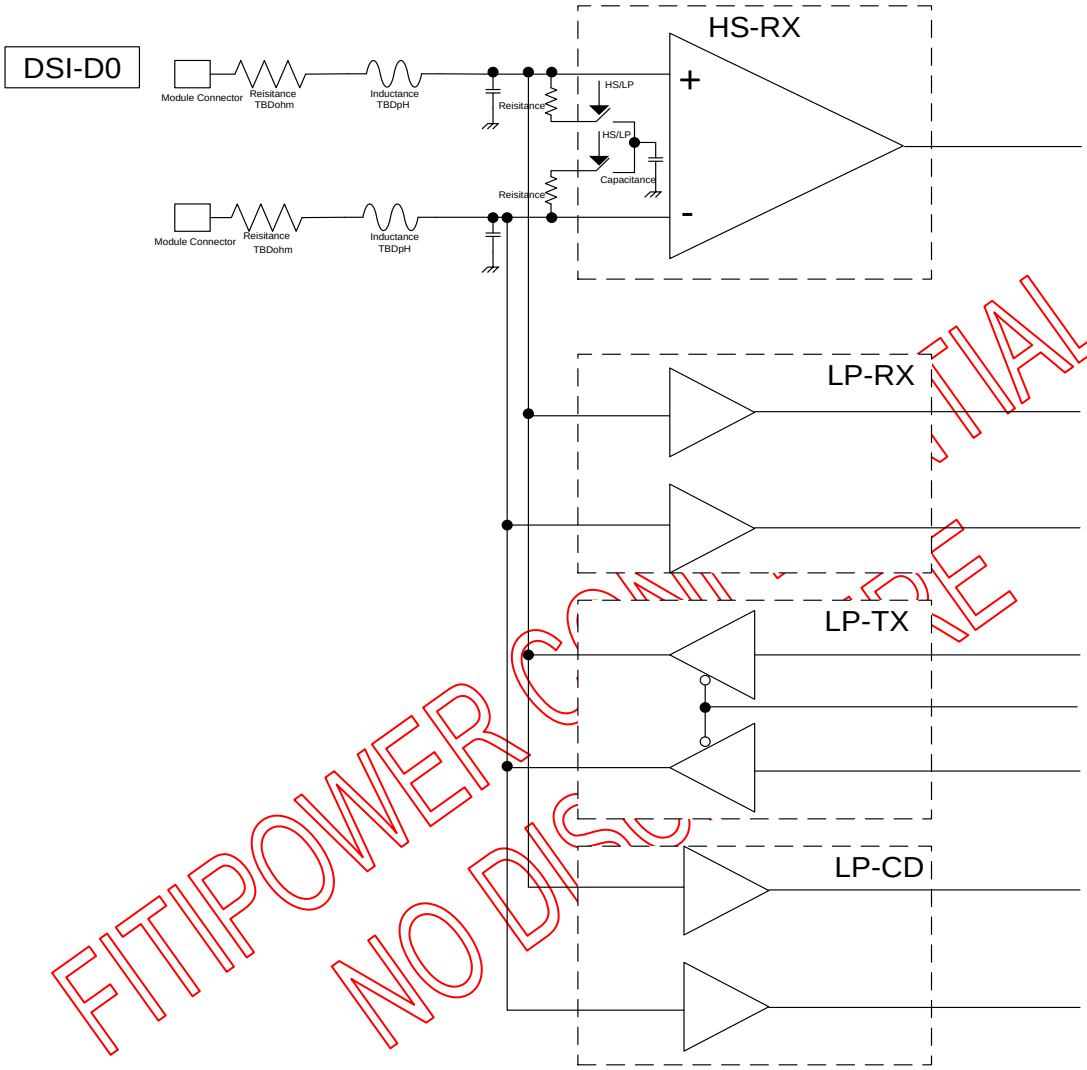

FITIPOWER CONFIDENTIAL
NO DISCLOSURE

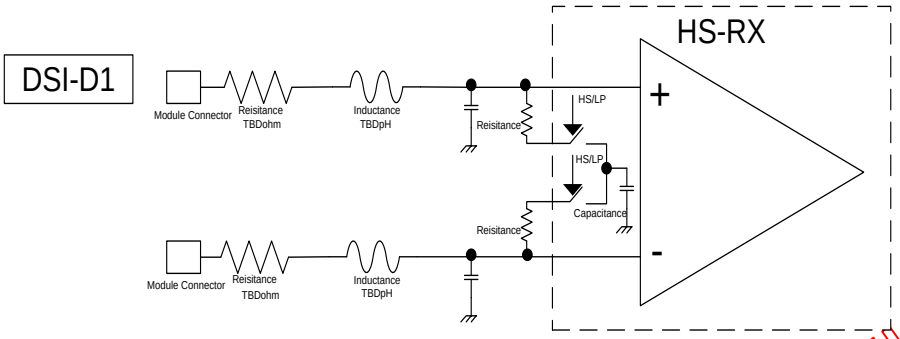

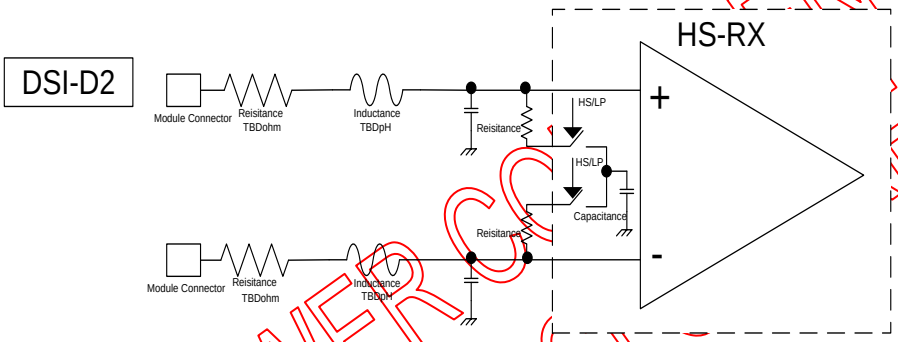

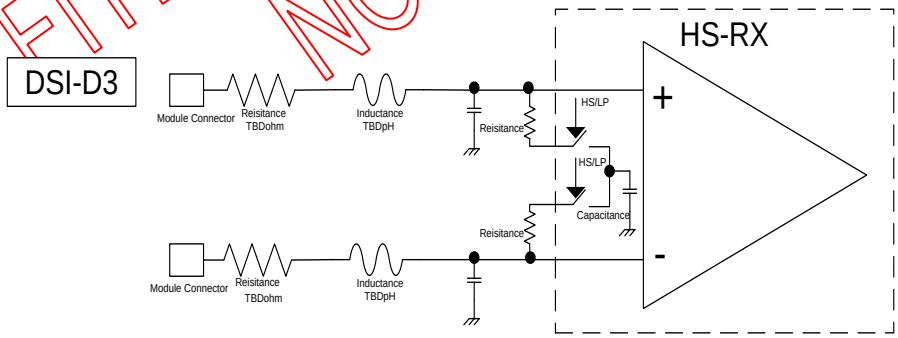

FITIPOWER CONFIDENTIAL
NO DISCLOSURE

8.2. Display Serial Interface (DSI)

8.2.1. Video Mode Communication

Video Mode peripherals require pixel data delivered in real time. This section specifies the format and timing of DSI traffic for this type of display module.

Transmission Packet Sequences

DSI supports several formats, or packet sequences, for Video Mode data transmission. The peripheral's timing requirements dictate which format is appropriate. These terms are used throughout the following sections:

- Non-Burst Mode with Sync Pulses – enables the peripheral to accurately reconstruct original video timing, including sync pulse widths.
- Non-Burst Mode with Sync Events – similar to above, but accurate reconstruction of sync pulse widths is not required, so a single Sync Event is substituted.
- Burst mode – RGB pixel packets are time-compressed, leaving more time during a scan line for LP mode(saving power) or for multiplexing other transmissions onto the DSI link.

In the following figures the Blanking or Low-Power Interval (BLLP) is defined as a period during which video packets such as pixel-stream and sync event packets are not actively transmitted to the peripheral. To enable PHY synchronization the host processor should periodically end HS transmission and drive the Data Lanes to the LP state. This transition should take place at least once per frame; shown as LPM in the figures in this section. It is recommended to return to LP state once per scanline during the horizontal blanking time. Regardless of the frequency of BLLP periods, the host processor is responsible for meeting all documented peripheral timing requirements. Note, at lower frequencies BLLP periods will approach, or become, zero.

During the BLLP the DSI Link may do any of the following:

- Remain in Idle Mode with the host processor in LP-11 state and the peripheral in LP-RX.
- Transmit one or more non-video packets from the host processor to the peripheral using Escape Mode.
- Transmit one or more non-video packets from the host processor to the peripheral using HS Mode.
- If the previous processor-to-peripheral transmission ended with BTA, transmit one or more packets from the peripheral to the host processor using Escape Mode.
- Transmit one or more packets from the host processor to a different peripheral using a different Virtual Channel ID.

The sequence of packets within the BLLP or RGB portion of a HS transmission is arbitrary. The host processor may compose any sequence of packets, including iterations, within the limits of the packet format definitions. For all timing cases, the first line of a frame shall start with VS; all other lines shall start with HS. This is also true in the special case when VSA+VBP=0. Note that the position of synchronization packets, such as VS and HS, in time is of utmost importance since this has a direct impact on the visual performance of the display panel.

Normally, RGB pixel data is sent with one full scan line of pixels in a single packet. Individual pixels shall not be split across packets.

FITIPOWER CONFIDENTIAL
NO DISCLOSURE

Transmission packet components used in the figures in this section are defined in Figure below unless otherwise specified.

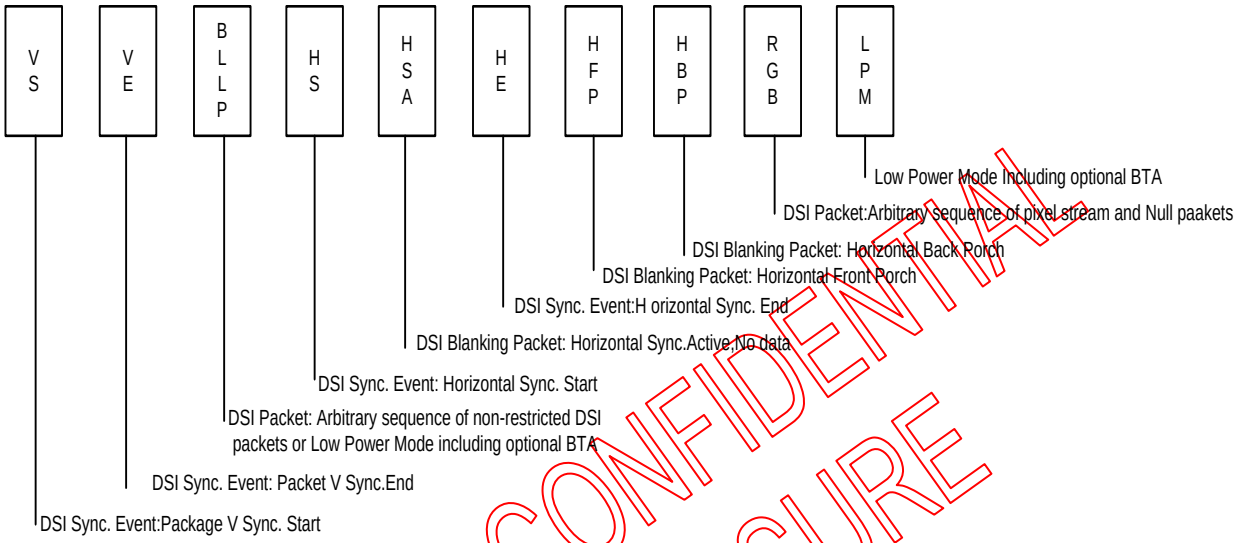

FITIPOWER CONFIDENTIAL
NO DISCLOSURE

DSI Video Mode Interface Timing Legend

If a peripheral timing specification for HBP or HFP minimum period is zero, the corresponding Blanking Packet may be omitted. If the HBP or HFP maximum period is zero, the corresponding blanking packet shall be omitted.

Clock Requirements

A DSI host processor shall support continuous clock on the Clock Lane for display module that require it, so the host processor needs to keep the HS serial clock running.

●Non-Burst Mode with Sync Pulses

With this format, the goal is to accurately convey DPI-type timing over the DSI serial Link. This includes matching DPI pixel-transmission rates, and widths of timing events like sync pulses. Accordingly, synchronization periods are defined using packets transmitting both start and end of sync pulses. An example of this mode is shown in Figure below.

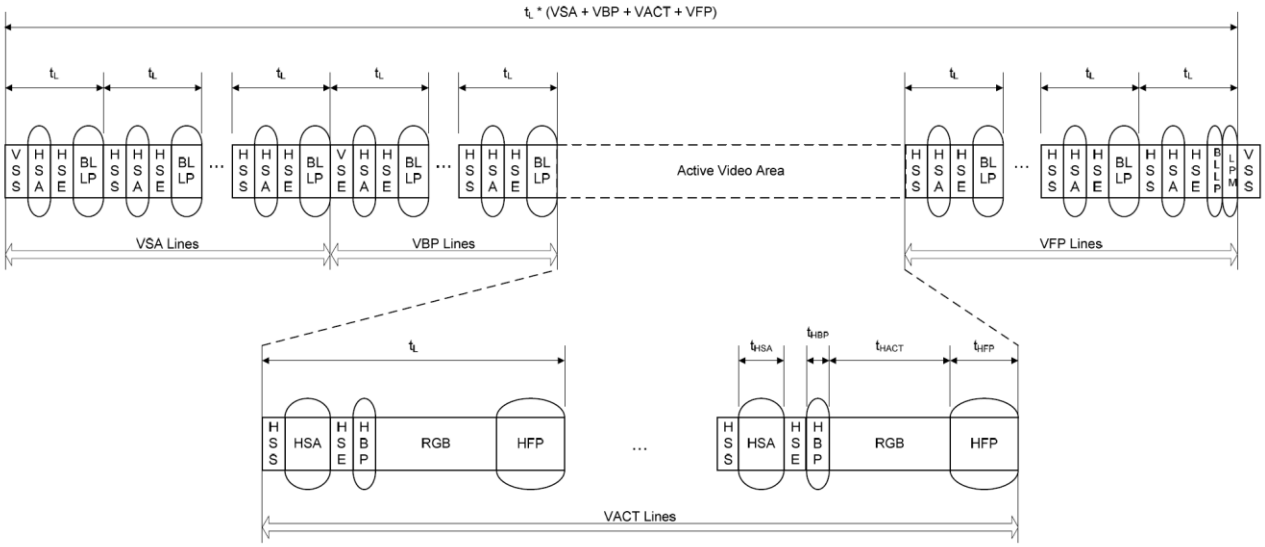

Normally, periods shown as HSA (Horizontal Sync Active), HBP (Horizontal Back Porch) and HFP (Horizontal Front Porch) are filled by Blanking Packets, with lengths (including packet overhead) calculated to match the period specified by the peripheral's data sheet. Alternatively, if there is sufficient time to transition from HS to LP mode and back again, a timed interval in LP mode may substitute for a Blanking Packet, thus saving power.

FITIPOWER NO DISCLO

●**Non-Burst Mode with Sync Events**

This mode is a simplification of the format described in section “Non-Burst Mode with Sync Pulse” .Only the start of each synchronization pulse is transmitted. The peripheral may regenerate sync pulses as needed from each Sync Event packet received. Pixels are transmitted at the same rate as they would in a corresponding parallel display interface such as DPI-2. An example of this mode is shown in Figure below.

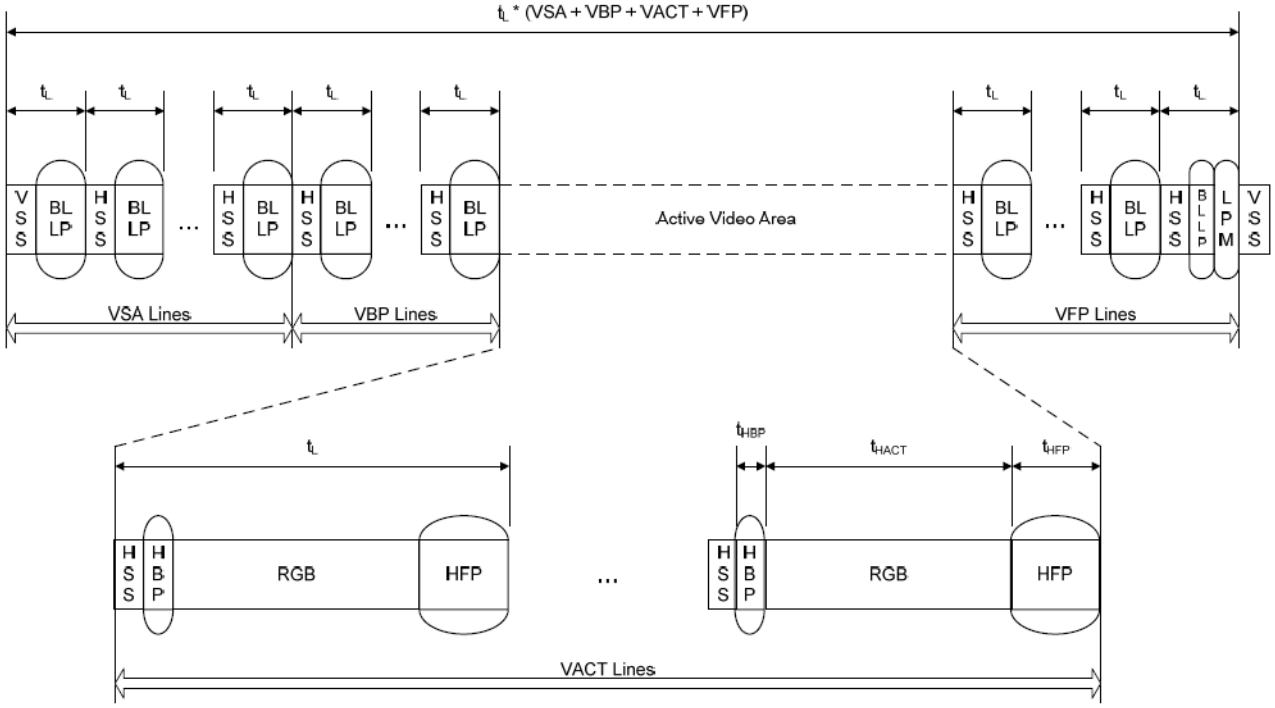

As with the previous Non-Burst Mode, if there is sufficient time to transition from HS to LP mode and back again, a timed interval in LP mode may substitute for a Blanking Packet, thus saving power.

- **Burst Mode**

In this mode, blocks of pixel data can be transferred in a shorter time using a time-compressed burst format. This is a good strategy to reduce overall DSI power consumption, as well as enabling larger blocks of time for other data transmissions over the Link in either direction. There may be a line buffer or similar memory on the peripheral to accommodate incoming data at high speed. Following HS pixel data transmission, the bus goes to Low Power Mode, during which it may remain idle, i.e. the host processor remains in LP-11 state, or LP transmission may take place in either direction. If the peripheral takes control of the bus for sending data to the host processor, its transmission time shall be limited to ensure data underflow does not occur from its internal buffer memory to the display device. An example of this mode is shown in Figure below.

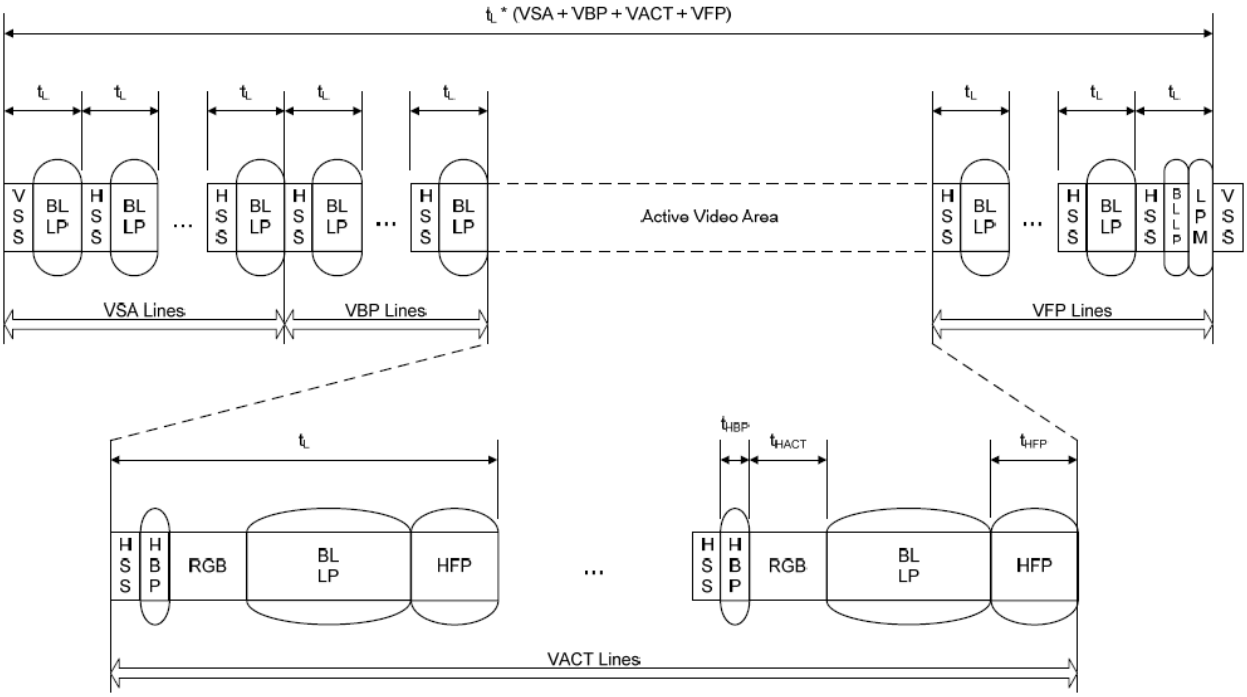

Similar to the Non-Burst Mode scenario, if there is sufficient time to transition from HS to LP mode and back again, a timed interval in LP mode may substitute for a Blanking Packet, thus saving power.

9. COMMAND DESCRIPTION

9.1. MIPI Control Register

Following table list all the MIPI control registers and bit name definition for EK79007AD. Refer to the next section for detail register function description, please.

Setting of all the MIPI registers will take effect at the coming valid Vsync signal except GRB bit.

All the MIPI control registers and bit name definition:

	Register address									MSB							LSB	default (hex)
No.	A7	A6	A5	A4	A3	A2	A1	A0	R/W	D7	D6	D5	D4	D3	D2	DI	DO	_
R00h	0	0	0	0	0	0	0	0	0	NOP								_
R01h	0	0	0	0	0	0	0	1	0	GRB								_
R05h	0	0	0	0	0	0	0	1	0	RDNUMED(TBD)								_
R0Ah	0	0	0	0	1	0	1	0	1	GET_POWER_Mode								_
R0Dh	0	0	0	0	1	1	0	1	1	GET_DISPLAY_Mode								_
R0Eh	0	0	0	0	1	1	1	0	1	GET_SIGNAL_Mode(TBD)								_
R0Fh	0	0	0	0	1	1	1	1	1	RDDSDR(TBD)								_
R10h	0	0	0	1	0	0	0	0	0	ENTER_SLEEP_MODE								_
R11h	0	0	0	1	0	0	0	1	0	EXIT_SLEEP_MODE								_
R20h	0	0	1	0	0	0	0	0	0	EXIT_INVERT_MODE								_
R21h	0	0	1	0	0	0	0	1	0	ENTER_INVERT_MODE								_
R36h	0	0	1	1	0	1	1	0	1/0	0	0	0	0	0	0	UPDN(0)	SHLR(1)	01
R80h	1	0	0	0	0	0	0	0	1/0	G2R[3:0] (1000)				G1R[3:0] (1000)				88
R81h	1	0	0	0	0	0	0	1	1/0	G4R[3:0] (1000)				G3R[3:0] (1000)				88
R82h	1	0	0	0	0	0	1	0	1/0	G6R[3:0] (1000)				G5R[3:0] (1000)				88
R83h	1	0	0	0	0	0	1	1	1/0	G8R[3:0] (1000)				G7R[3:0] (1000)				88
R84h	1	0	0	0	0	1	0	0	1/0	G10R[3:0] (1000)				G9R[3:0] (1000)				88
R85h	1	0	0	0	0	1	0	1	1/0	G12R[3:0] (1000)				G11R[3:0] (1000)				88
R86h	1	0	0	0	0	1	1	0	1/0	G14R[3:0] (1000)				G13R[3:0] (1000)				88
RB0h	1	0	1	1	0	0	0	0	1/0	PWR_EN(0)	–	–	–	–	–	–	–	00
RB1h	1	0	1	1	0	0	0	1	1/0			HFRC(0)	DITHER(0)	BIST(0)	RES[1:0] (00)		–	00
RB2h	1	0	1	1	0	0	1	0	1/0	–	NBW(0)	En_3lane(0)	En_2lane(0)	–	–	–	–	00
RB3h	1	0	1	1	0	0	1	1	1/0	–	–	–	–	–	FRAME(0)	SEL[1:0]		00

FITIPOWER CONFIDENTIAL
NO DISCLOSURE

R00h: NOP (No Operation)

Address (MIPI I/F)	00h					Access Attribute			W
						Number of Parameter(s)			0
Parameter	D[7]	D[6]	D[5]	D[4]	D[3]	D[2]	D[1]	D[0]	Default Value
	No Argument								N/A
Description	This command performs no operation and is ignored by the device.								

R01h: GRB (Software Reset)

Address (MIPI I/F)	01h					Access Attribute			W
						Number of Parameter(s)			0
Parameter	D[7]	D[6]	D[5]	D[4]	D[3]	D[2]	D[1]	D[0]	Default Value
	No Argument								N/A
Description	When the Software Reset command is written, it causes a software reset. It resets the commands and parameters to their S/W Reset register values and all source are set to GND (display off).								
Restriction	(1)It will be necessary to wait 20 msec before sending new command following software reset. (2)The display module loads all display supplier's factory default values to the registers during 5 msec.								

R05h: RDNUMED (reserved)

R0Ah: GET_POWER_MODE (Read Display Power Mode)

Address (MIPI I/F)	0Ah					Access Attribute			R
						Number of Parameter(s)			1
Parameter	D[7]	D[6]	D[5]	D[4]	D[3]	D[2]	D[1]	D[0]	Default Value
	D7	D6	D5	D4	D3	D2	D1	D0	00h
Description	D[4]:Sleep In/Out "0" =Sleep Out, "1" =Sleep In								

R0Dh: GET_DISPLAY_MODE (Read the Current Display Mode)

Address (MIPI I/F)	0Dh					Access Attribute			R
						Number of Parameter(s)			1
Parameter	D[7]	D[6]	D[5]	D[4]	D[3]	D[2]	D[1]	D[0]	Default Value
	D7	D6	D5	D4	D3	D2	D1	D0	00h
Description	D[5]:Inversion On/Off "0" =Inversion off, "1" =Inversion on								

FITIPOWER CONFIDENTIAL
NO DISCLOSURE

R0Eh: GET_SIGNAL_MODE (TBD)

Address (MIPI I/F)	0Fh					Access Attribute			R
						Number of Parameter(s)			1
Parameter	D[7]	D[6]	D[5]	D[4]	D[3]	D[2]	D[1]	D[0]	Default Value
	No Argument								00h
Description	D[0]:Error on DSI ”1” :error, ”0” =no error								
Restriction	-								

R0Fh:RDDSDR (Read Display Self-Diagnostic Result)(TBD)

R10h: ENTER_SLEEP_MODE (Enter the Sleep-In Mode)

Address (MIPI I/F)	10h					Access Attribute			W
						Number of Parameter(s)			0
Parameter	D[7]	D[6]	D[5]	D[4]	D[3]	D[2]	D[1]	D[0]	Default Value
	No Argument								Sleep In
Description	This command initiates the power-down sequence. The Sleep In profile will be executed when this command is received.								
Restriction	This command has no effect when the display module is already in Sleep Mode.								

R11h: EXIT_SLEEP_MODE (Exit the Sleep-In Mode)

Address (MIPI I/F)	11h					Access Attribute			W
						Number of Parameter(s)			0
Parameter	D[7]	D[6]	D[5]	D[4]	D[3]	D[2]	D[1]	D[0]	Default Value
	No Argument								Sleep In
Description	This command initiates the power-up sequence. The Sleep Out will load register value. It will be necessary to wait 5 msec before sending next command.								
Restriction	This command will not cause any visible effect on the display when the display is not in Sleep.								

R20h:EXIT_INVERT_MODE (Display Inversion Off)

Address (MIPI I/F)	20h					Access Attribute			W
						Number of Parameter(s)			0
Parameter	D[7]	D[6]	D[5]	D[4]	D[3]	D[2]	D[1]	D[0]	Default Value
	No Argument								Inversion Off
Description	This command is used to recover from display reverse mode and does not change any other status.								
Restriction	This command has no effect when the module is already in inversion off mode.								

FITIPOWER CONFIDENTIAL
NOT DISCLOSURE

R21h: ENTER_INVERT_MODE (Display Inversion On)

Address (MIPI I/F)	21h					Access Attribute			W
						Number of Parameter(s)			0
Parameter	D[7]	D[6]	D[5]	D[4]	D[3]	D[2]	D[1]	D[0]	Default value
	No Argument								Inversion Off
Description	This command is used to enter display Inversion mode and does not change any other status. To exit from Display Inversion on, the Display Inversion off command (20h) should be written.								
Restriction	This command has no effect when the module is already in inversion on mode.								

R36h: SET_ADDRESS_MODE (Data Access Control)

Address (MIPI I/F)	36h					Access Attribute			R/W
						Number of Parameter(s)			1
Parameter	D[7]	D[6]	D[5]	D[4]	D[3]	D[2]	D[1]	D[0]	Default Value
	0	0	0	0	0	0	UPDN	SHLR	01h
Description	UPDN: Gate up or down scan control. UPDN = "0" , STV2 output vertical start pulse and UD pin output logical "0" to Gate driver.(default) UPDN = "1" , STV1 output vertical start pulse and UD pin output logical "1" to Gate driver. SHLR: Source right or left sequence control. SHLR = "0" , shift left: last data = S1←S2←S3……..←S1200 = first data. SHLR = "1" , shift right: first data = S1→S2→S3……..→S1200 = last data. (default)								

R80h: Gamma Control Register

Address (MIPI I/F)	80h					Access Attribute			R/W
						Number of Parameter(s)			1
Parameter	D[7]	D[6]	D[5]	D[4]	D[3]	D[2]	D[1]	D[0]	Default Value
	G2R				G1R				88h
Description	Gamma voltage setting.								

R81h: Gamma Control Register

Address (MIPI I/F)	81h					Access Attribute			R/W
						Number of Parameter(s)			1
Parameter	D[7]	D[6]	D[5]	D[4]	D[3]	D[2]	D[1]	D[0]	Default Value
	G4R				G3R				88h
Description	Gamma voltage setting.								

FITIPOWER CONFIDENTIAL
NO DISCLOSURE

R82h: Gamma Control Register

Address (MIPI I/F)	82h					Access Attribute			R/W
						Number of Parameter(s)			1
Parameter	D[7]	D[6]	D[5]	D[4]	D[3]	D[2]	D[1]	D[0]	Default Value
	G6R				G5R				88h
Description	Gamma voltage setting.								

R83h: Gamma Control Register

Address (MIPI I/F)	83h					Access Attribute			R/W
						Number of Parameter(s)			1
Parameter	D[7]	D[6]	D[5]	D[4]	D[3]	D[2]	D[1]	D[0]	Default Value
	G8R				G7R				88h
Description	Gamma voltage setting.								

R84h: Gamma Control Register

Address (MIPI I/F)	84h					Access Attribute			R/W
						Number of Parameter(s)			1
Parameter	D[7]	D[6]	D[5]	D[4]	D[3]	D[2]	D[1]	D[0]	Default Value
	G10R				G9R				88h
Description	Gamma voltage setting.								

R85h: Gamma Control Register

Address (MIPI I/F)	85h					Access Attribute			R/W
						Number of Parameter(s)			1
Parameter	D[7]	D[6]	D[5]	D[4]	D[3]	D[2]	D[1]	D[0]	Default Value
	G12R				G11R				88h
Description	Gamma voltage setting.								

R86h: Gamma Control Register

Address (MIPI I/F)	86h					Access Attribute			R/W
						Number of Parameter(s)			1
Parameter	D[7]	D[6]	D[5]	D[4]	D[3]	D[2]	D[1]	D[0]	Default Value
	G14R				G13R				88h
Description	Gamma voltage setting.								

FITIPOWER CONFIDENTIAL
NO DISCLOSURE

RB0h: Panel Control Register

Address (MIPI I/F)	B0h					Access Attribute			R/W
						Number of Parameter(s)			1
Parameter	D[7]	D[6]	D[5]	D[4]	D[3]	D[2]	D[1]	D[0]	Default Value
	PWR_EN (0)	–	–	–	–	–	–	–	00h
Description	PWR_EN: POWER enable. PWR_EN = ”1” , enable VCOM buffer PWR_EN = ”0” , disable VCOM buffer (Default)								

RB1h: Panel Control Register

Address (MIPI I/F)	B1h					Access Attribute			R/W
						Number of Parameter(s)			1
Parameter	D[7]	D[6]	D[5]	D[4]	D[3]	D[2]	D[1]	D[0]	Default Value
			HFRC (0)	DITHER (0)	BIST (0)	RES[1:0] (00)		–	00h
Description	HFRC: H-FRC selection. HFRC = ”1” : H-FRC enable HFRC = ”0” : H-FRC disable (Default) If DITHER=”0” ,disable dithering function(H-FRC and FRC disable) DITHER: Dithering function enable control. DITHER = ”1” , Enable internal dithering function DITHER = ”0” , Disable internal dithering function (Default) BIST: Normal Operation/BIST pattern select. BIST = ”1” : BIST(DCLK input is not needed) BIST = ”0” : Normal Operation (Default) RES[1:0]: = ”01” , for 1024(RGB)*768 display resolution = ”00” , for 1024(RGB)*600 display resolution (default) = ”10” , for 800(RGB)*600 display resolution (601~936 channel disable) = ”11” , for 800(RGB)*480 display resolution (601~936 channel disable)								

FITIPOWER CONFIDENTIAL
NO DISCLOSURE

RB2h: Panel Control Register

Address (MIPI I/F)	B2h				Access Attribute				R/W
					Number of Parameter(s)				1
Parameter	D[7]	D[6]	D[5]	D[4]	D[3]	D[2]	D[1]	D[0]	Default Value
	—	NBW(0)	En_3lane(0)	En_2lane(0)	—	—	—	—	00h
Description	NBW: Normally black or normally white setting. NBW="1" : Normally black. NBW="0" : Normally white(default). En_3lane: Enable or disable 3 lane MIPI interface En_3lane = "1" : Enable 3 lane MIPI interface En_3lane = "0" : Disable 3 lane MIPI interface(Default) En_2lane: Enable or disable 2 lane MIPI interface En_2lane = "1" : Enable 2 lane MIPI interface En_2lane = "0" : Disable 2 lane MIPI interface(Default) Note: If En_3lane and En_2lane = "1" simultaneously, the interface would be MIPI 4 lane.								

RB3h: Panel Control Register

Address (MIPI I/F)	B2h					Access Attribute			R/W
						Number of Parameter(s)			1
Parameter	D[7]	D[6]	D[5]	D[4]	D[3]	D[2]	D[1]	D[0]	Default Value
	—	—	—	—	—	FRAME (0)	SEL[1:0] (00)		00h
Description	FRAME: Frame inverse or not select. FRAME = "1" , Uniform FRAME = "0" , Frame inverse(Default) SEL[1:0]:Gate on sequence select.								

SEL[1]	SEL[0]	Pin control function
1	1	Z+2
1	0	2
0	1	2
0	0	Z(default)

FITIPOWER CONFIDENTIAL
NO DISCLOSURE

10. FUNCTION DESCRIPTION

10.1. Power On/Off Sequence

In order to prevent IC from power on reset fail, the rising time (TPOR) of the digital power supply VDD should be maintained within the given specifications. Refer to “AC Characteristics” for more detail on timing.

10.1.1. Power On/Off Sequence

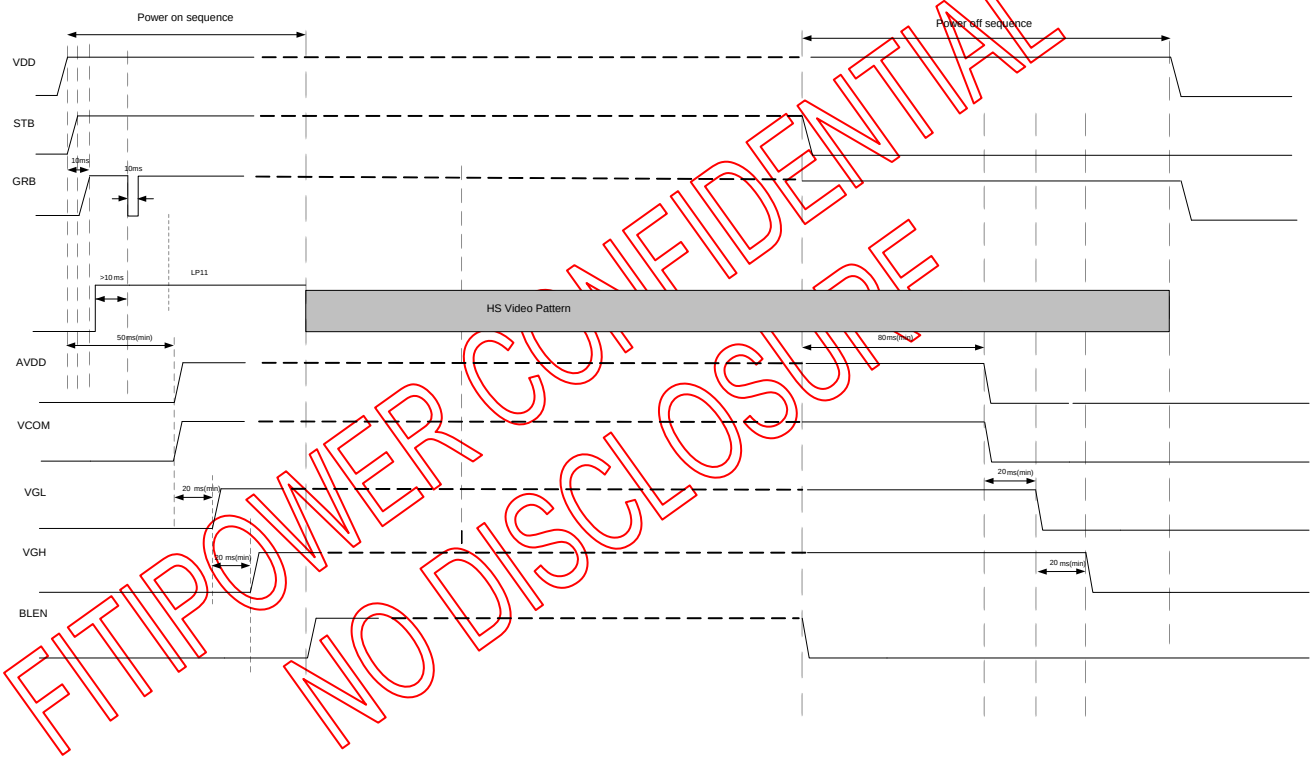

FITIPOWER CONFIDENTIAL
NO DISCLOSURE

Note: CLK and Data Lanes should keep in LP11(stop state) before GRB.

10.2. Input Data VS Output Voltage

The figure below shows the relationship between the input data and the output voltage. Refer to the following pages for the relative resistor values and voltage calculation method.

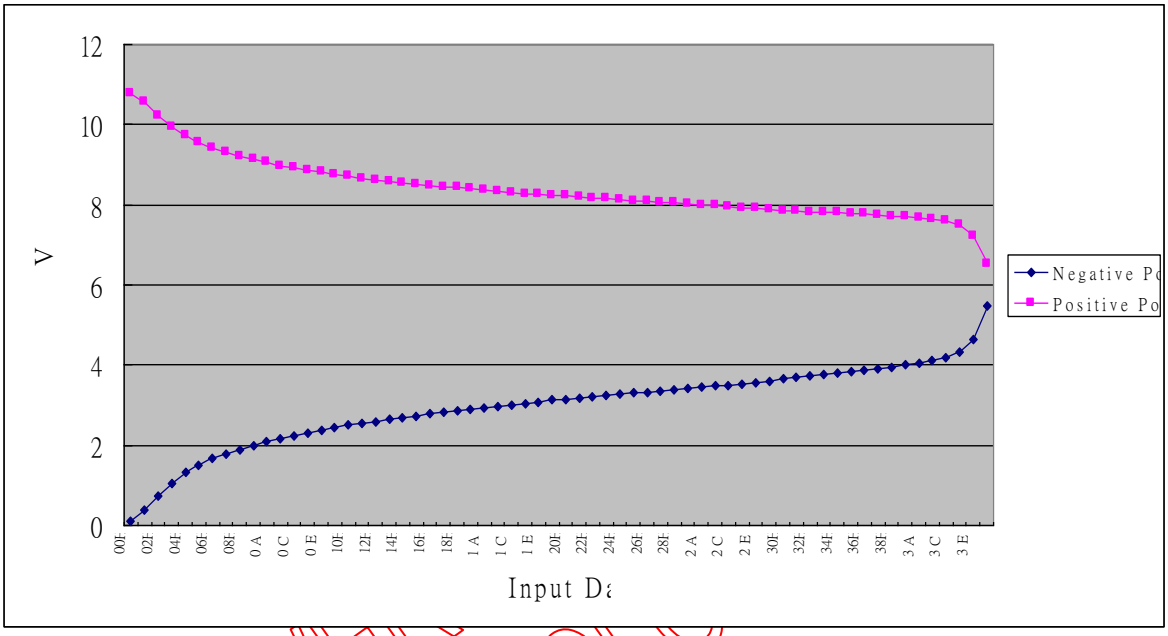

Remark: AVDD-0.1 > V1 > V2> V3 > V4 > V5 > V6 > V7; V8 > V9 > V10 > V11 > V12 > V13 > V14 > AGND+0.1V

FITIPOWER
NO DISCLO

10.3. Input Data and Output Voltage Reference Table

Input Data and Output Voltage Reference Table

@AVDD=11V

V1	V2	V3	V4	V5	V6	V7	V8	V9	V10	V11	V12	V13	V14	Unit
10.78	10.569	8.708	8.213	7.866	7.243	6.51	5.49	4.63	3.653	3.146	2.493	0.373	0.11	V

Data	Positive
00H	AVDD×0.980
01H	AVDD×0.961
02H	AVDD×0.930
03H	AVDD×0.905
04H	AVDD×0.885
05H	AVDD×0.870
06H	AVDD×0.857
07H	AVDD×0.847
08H	AVDD×0.838
09H	AVDD×0.830
0AH	AVDD×0.823
0BH	AVDD×0.816
0CH	AVDD×0.811
0DH	AVDD×0.806
0EH	AVDD×0.801
0FH	AVDD×0.796
10H	AVDD×0.792
11H	AVDD×0.788
12H	AVDD×0.784
13H	AVDD×0.781
14H	AVDD×0.778
15H	AVDD×0.775
16H	AVDD×0.772
17H	AVDD×0.769
18H	AVDD×0.766
19H	AVDD×0.763
1AH	AVDD×0.761
1BH	AVDD×0.758
1CH	AVDD×0.756
1DH	AVDD×0.753
1EH	AVDD×0.751
1FH	AVDD×0.748

Data	Positive
20H	AVDD×0.747
21H	AVDD×0.745
22H	AVDD×0.743
23H	AVDD×0.741
24H	AVDD×0.739
25H	AVDD×0.737
26H	AVDD×0.735
27H	AVDD×0.732
28H	AVDD×0.731
29H	AVDD×0.729
2AH	AVDD×0.727
2BH	AVDD×0.725
2CH	AVDD×0.723
2DH	AVDD×0.721
2EH	AVDD×0.719
2FH	AVDD×0.717
30H	AVDD×0.715
31H	AVDD×0.713
32H	AVDD×0.711
33H	AVDD×0.710
34H	AVDD×0.709
35H	AVDD×0.707
36H	AVDD×0.706
37H	AVDD×0.704
38H	AVDD×0.702
39H	AVDD×0.700
3AH	AVDD×0.697
3BH	AVDD×0.694
3CH	AVDD×0.690
3DH	AVDD×0.681
3EH	AVDD×0.658
3FH	AVDD×0.592

FITIPOWER CONFIDENTIAL
NO DISCLOSURE

Data	Negative
00H	AVDD×0.010
01H	AVDD×0.034
02H	AVDD×0.068
03H	AVDD×0.096
04H	AVDD×0.119
05H	AVDD×0.136
06H	AVDD×0.151
07H	AVDD×0.162
08H	AVDD×0.172
09H	AVDD×0.182
0AH	AVDD×0.189
0BH	AVDD×0.197
0CH	AVDD×0.204
0DH	AVDD×0.210
0EH	AVDD×0.215
0FH	AVDD×0.221
10H	AVDD×0.227
11H	AVDD×0.231
12H	AVDD×0.236
13H	AVDD×0.240
14H	AVDD×0.245
15H	AVDD×0.248
16H	AVDD×0.253
17H	AVDD×0.256
18H	AVDD×0.260
19H	AVDD×0.263
1AH	AVDD×0.266
1BH	AVDD×0.270
1CH	AVDD×0.273
1DH	AVDD×0.277
1EH	AVDD×0.280
1FH	AVDD×0.284

Data	Negative
20H	AVDD×0.286
21H	AVDD×0.289
22H	AVDD×0.292
23H	AVDD×0.294
24H	AVDD×0.297
25H	AVDD×0.300
26H	AVDD×0.302
27H	AVDD×0.305
28H	AVDD×0.308
29H	AVDD×0.311
2AH	AVDD×0.314
2BH	AVDD×0.316
2CH	AVDD×0.318
2DH	AVDD×0.321
2EH	AVDD×0.325
2FH	AVDD×0.328
30H	AVDD×0.332
31H	AVDD×0.336
32H	AVDD×0.339
33H	AVDD×0.342
34H	AVDD×0.345
35H	AVDD×0.348
36H	AVDD×0.351
37H	AVDD×0.355
38H	AVDD×0.359
39H	AVDD×0.364
3AH	AVDD×0.369
3BH	AVDD×0.375
3CH	AVDD×0.382
3DH	AVDD×0.394
3EH	AVDD×0.421
3FH	AVDD×0.499

FITIPOWER CONFIDENTIAL
NO DISCLOSURE

10.4. Input Timing Table (4Lane)

For 1024RGB x 768 panel

DE mode

Parameter	Symbol	Value			Unit
		Min.	Typ.	Max.	
DCLK frequency @Frame rate=60hz	fclk	52	65	71	Mhz
Horizontal display area	thd		1024		DCLK
HSYNC period time	th	1114	1344	1400	DCLK
HSYNC blanking	thb+thfp	90	320	376	DCLK
Vertical display area	Tvd		768		H
VSYNC period time	Tv	778	806	845	H
VSYNC blanking	Tvb+Tvfp	10	38	77	H

HV mode

Horizontal input timing

Parameter		Symbol	Value			Unit
Horizontal display area		thd		1024		DCLK
DCLK frequency@ Frame rate=60hz		fclk	Min.	Typ.	Max.	
			57	65	70.5	Mhz
1 Horizontal Line		th	1200	1344	1400	DCLK
HSYNC pulse width	Min.	thpw		1		
	Typ.			70		
	Max.			140		
HSYNC blanking		thb	160	160	160	
HSYNC front porch		thfp	16	160	216	

HV mode

Vertical input timing

Parameter	Symbol	Value			Unit
		Min.	Typ.	Max.	
Vertical display area	tvd		768		H
VSYNC period time	tv	792	806	840	H
VSYNC pulse width	tvpw	1	10	20	H
VSYNC back porch	tvb	23	23	23	H
VSYNC front porch	tvfp	1	15	49	H

FITIPOWER CONFIDENTIAL
NO DISCLOSURE

10.4.1. Vertical input timing

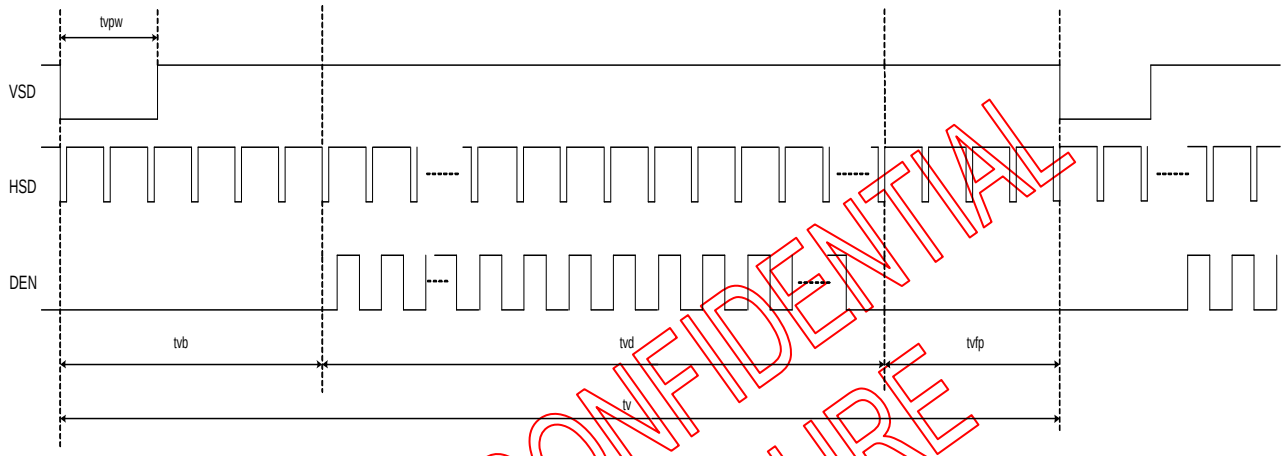

Vertical input timing

10.4.2. Horizontal input timing

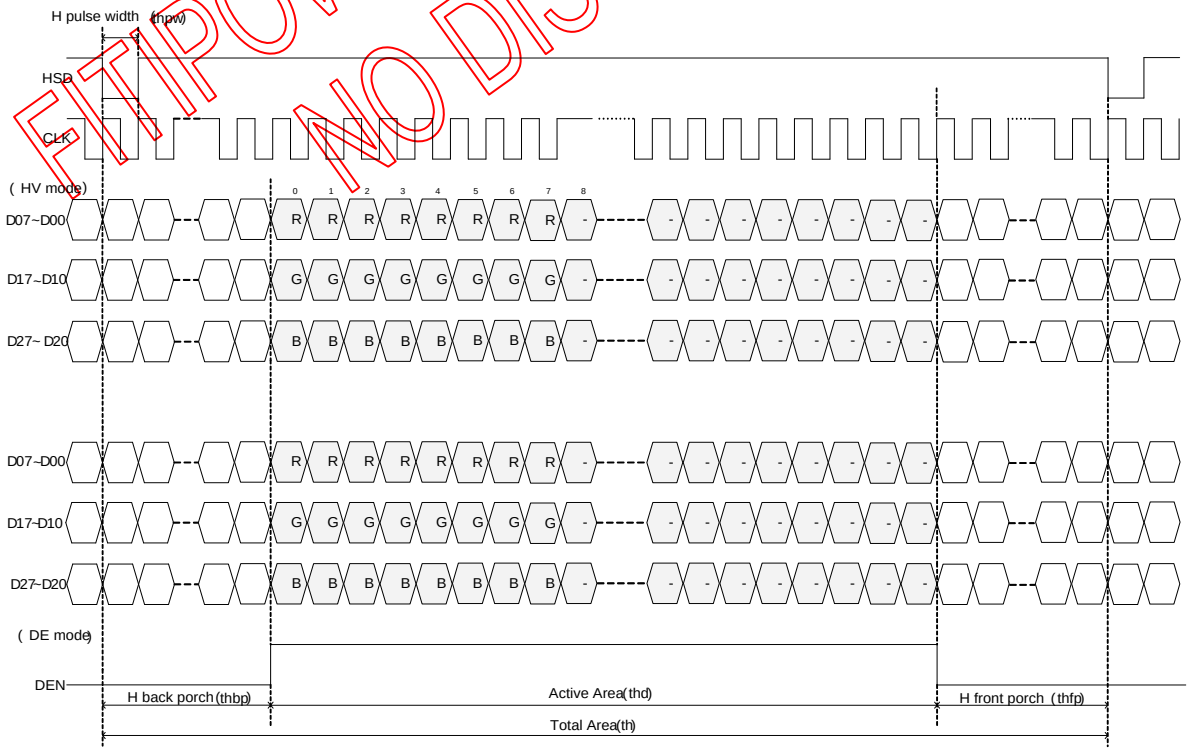

Horizontal input timing

FITIPOWER CONFIDENTIAL
NO DISCLOSURE

DE mode

Parameter	Symbol	Value			Unit
		Min.	Typ.	Max.	
DCLK frequency @Frame rate=60hz	fclk	40.8	51.2	67.2	Mhz
Horizontal display area	thd	1024			DCLK
HSYNC period time	th	1114	1344	1400	DCLK
HSYNC blanking	thb+thfp	90	320	376	DCLK
Vertical display area	Tvd	600			H
VSYNC period time	Tv	610	635	800	H
VSYNC blanking	Tvb+Tvfp	10	35	200	H

HV mode
Horizontal input timing

Parameter		Symbol	Value			Unit
Horizontal display area		thd	1024			DCLK
DCLK frequency@ Frame rate=60hz		fclk	Min.	Typ.	Max.	
			44.9	51.2	63	Mhz
1 Horizontal Line		th	1200	1344	1400	DCLK
HSYNC pulse width	Min.	thpw	1			DCLK
	Typ.		70			DCLK
	Max.		140			DCLK
HSYNC blanking		thb	160	160	160	DCLK
HSYNC front porch		thfp	16	160	216	DCLK

HV mode
Vertical input timing

Parameter	Symbol	Value			Unit
		Min.	Typ.	Max.	
Vertical display area	tvd	600			H
VSYNC period time	tv	624	635	750	H
VSYNC pulse width	tvpw	1	10	20	H
VSYNC back porch	tvb	23	23	23	H
VSYNC front porch	tvfp	1	12	127	H

FITIPOWER CONFIDENTIAL
NO DISCLOSURE

For 800RGB x 600 panel

DE mode

Parameter	Symbol	Value			Unit
		Min.	Typ.	Max.	
DCLK frequency @Frame rate=60hz	fclk	32.6	39.6	62.4	Mhz
Horizontal display area	thd	800			DCLK
HSYNC period time	th	890	1000	1300	DCLK
HSYNC blanking	thb+thfp	90	200	500	DCLK
Vertical display area	Tvd	600			H
VSYNC period time	Tv	610	660	800	H
VSYNC blanking	Tvb+Tvfp	10	60	200	H

HV mode

Horizontal input timing

Parameter		Symbol	Value			Unit
Horizontal display area		thd	800			DCLK
DCLK frequency@ Frame rate=60hz		fclk	Min.	Typ.	Max.	
			34.5	39.6	50.4	Mhz
1 Horizontal Line		th	900	1000	1200	DCLK
HSYNC pulse width	Min.	thpw	1			
	Typ.		20			
	Max.		40			
HSYNC blanking		thb	88	88	88	
HSYNC front porch		thfp	12	112	312	

HV mode

Vertical input timing

Parameter	Symbol	Value			Unit
		Min.	Typ.	Max.	
Vertical display area	tvd	600			H
VSYNC period time	tv	640	660	700	H
VSYNC pulse width	tvpw	1	10	20	H
VSYNC back porch	tvb	39	39	39	H
VSYNC front porch	tvfp	1	21	61	H

FITIPOWER CONFIDENTIAL
NO DISCLOSURE

For 800RGB x 480 panel

DE mode

Parameter	Symbol	Value			Unit
		Min.	Typ.	Max.	
DCLK frequency @Frame rate=60hz	fclk	26.2	29.2	54.6	Mhz
Horizontal display area	thd	800			DCLK
HSYNC period time	th	890	928	1300	DCLK
HSYNC blanking	thb+thfp	90	128	500	DCLK
Vertical display area	Tvd	480			H
VSYNC period time	Tv	490	525	700	H
VSYNC blanking	Tvb+Tvfp	10	45	220	H

HV mode

Horizontal input timing

Parameter		Symbol	Value			Unit
Horizontal display area		thd	800			DCLK
DCLK frequency@ Frame rate=60hz		fclk	Min.	Typ.	Max.	
			27.7	29.2	39.6	Mhz
1 Horizontal Line		th	900	928	1100	DCLK
HSYNC pulse width	Min.	thpw	1			
	Typ.		20			
	Max.		40			
HSYNC blanking		thb	88	88	88	
HSYNC front porch		thfp	12	40	212	

HV mode

Vertical input timing

Parameter	Symbol	Value			Unit
		Min.	Typ.	Max.	
Vertical display area	tvd	480			H
VSYNC period time	tv	513	525	600	H
VSYNC pulse width	tvpw	1	2	3	H
VSYNC back porch	tvb	32	32	32	H
VSYNC front porch	tvfp	1	13	88	H

FITIPOWER CONFIDENTIAL
NO DISCLOSURE

10.5. Input Timing Table (2Lane)

For 1024RGB x 600 panel

DE mode

Parameter	Symbol	Value			Unit
		Min.	Typ.	Max.	
DCLK frequency @Frame rate=60hz	fclk	40.8	51.2		Mhz
Horizontal display area	thd	1024			DCLK
HSYNC period time	th	1114	1344		DCLK
HSYNC blanking	thb+thfp	90	320		DCLK
Vertical display area	Tvd	600			H
VSYNC period time	Tv	610	635		H
VSYNC blanking	Tvb+Tvfp	10	35		H

HV mode

Horizontal input timing

Parameter		Symbol	Value			Unit
Horizontal display area		thd	1024			DCLK
DCLK frequency@ Frame rate=60hz		fclk	Min.	Typ.	Max.	
			44.9	51.2		Mhz
1 Horizontal Line		th	1200	1344		DCLK
HSYNC pulse width	Min.	thpw	1			
	Typ.		70			
	Max.		140			
HSYNC blanking		thb	160	160		
HSYNC front porch		thfp	16	160		

HV mode

Vertical input timing

Parameter	Symbol	Value			Unit
		Min.	Typ.	Max.	
Vertical display area	tvd	600			H
VSYNC period time	tv	624	635		H
VSYNC pulse width	tvpw	1	20		H
VSYNC back porch	tvb	23	23		H
VSYNC front porch	tvfp	1	12		H

FITIPOWER CONFIDENTIAL
NO DISCLOSURE

11. ABSOLUTE MAXIMUM RATING

VOLTAGE (TA = 25°C, GND = AGND = GND_IF = 0V)

	Min.	Max.	Unit
Digital Supply Voltage, VDD	-0.3	+2.0	V
Analog Supply Voltage, AVDD, V1~V14	-0.5	+15.0	V

TEMPERATURE

	Min.	Max.	Unit
Operating temperature	-20	+85	°C
Storage temperature	-55	+125	°C

FITIPOWER CONFIDENTIAL
NO DISCLOSURE

12. RECOMMENDED OPERATING RANGE

Recommended Operating Range (TA = -20 to 85°C, GND = AGND = GND_IF = 0V)

Parameter	Symbol	Min.	Typ.	Max.	Unit
Digital supply voltage	VDD	1.71	1.8	1.89	V
MIPI supply voltage	VDD_IF	1.71	1.8	1.89	V
Analog supply voltage	AVDD	8	-	13.5	V

FITIPOWER CONFIDENTIAL
NO DISCLOSURE

13. DC ELECTRICAL CHARACTERISTICS

13.1. Basic DC Characteristic

(VDD=VDD_IF=1.8V, AVDD=8 to 13.5V, GND=AGND=GND_IF=0V)

Parameter	Symbol	Condition	Min.	Typ.	Max.	Unit
Low level input voltage	Vil	For the digital circuit	0	-	0.3×VDD	V
High level input voltage	Vih	For the digital circuit	0.7×VDD	-	VDD	V
Input leakage current	Ii	For the digital circuit	-	-	±1	μA
High level output voltage	Voh	Ioh= -400 μA	VDD - 0.4	-	-	V
Low level output voltage	Vol	Iol= +400 μA	-	-	GND+0.4	V
Pull low/high resistor	Ri	For the digital input pin @ VDD_IF=1.8V	200K	250K	300K	ohm
Digital Operation current	Idd	Fclk=51.2MHz, VDD=VDD_IF=1.8V	-	TBD	-	mA
Digital Stand-by current	Ist1	Clock and all functions are stopped	-	10	50	μA
Analog Operating Current	Idda	No load, Fclk=51.2MHz, @AVDD=13.5V,V1=13.4V, V14=0.1V	-	10	12	mA
Analog Stand-by current	Ist2	No load, clock and all functions are stopped	-	10	50	μA
Input level of V1 ~ V7	Vref1	Gamma correction voltage input	0.4*AVDD	-	AVDD-0.1	V
Input level of V8 ~ V14	Vref2	Gamma correction voltage input	0.1	-	0.6*AVDD	V
Output Voltage deviation	Vod1	Vo = AGND+0.1V ~ AGND+0.5V and Vo = AVDD-0.5V ~ AVDD-0.1V	-	±20	±35	mV
Output Voltage deviation	Vod2	Vo = AGND+0.5V ~ AVDD-0.5V	-	±15	±20	mV
Output Voltage Offset between Chips	Voc	Vo = AGND+0.5V ~ AVDD-0.5V	-	-	±20	mV
Dynamic Range of Output	Vdr	SO1 ~ 1536	0.1	-	AVDD-0.1	V
Sinking Current of Outputs	IOLy	SO1 ~ 1536; Vo=0.1V v.s 1.0V , AVDD=13.5V	80	-	-	uA
Driving Current of Outputs	IOHy	SO1 ~ 1536; Vo=13.4V v.s 12.5V , AVDD=13.5V	80	-	-	uA
Resistance of Gamma Table	Rg	Rn: Internal gamma resistor	0.7*Rn	1.0*Rn	1.3*Rn	ohm

FITIPOWER CONFIDENTIAL
NO DISCLOSURE

13.2. MIPI Interface DC Characteristic

(VDD=VDD_IF=1.8V,AVDD=8 to 13.5V,GND=AGND=GND_IF=0V,TA=-20℃ to 85℃)

Parameter	Symbol	Min.	Typ.	Max.	Unit
MIPI Characteristics for High Speed Receiver					
Single-ended input low voltage	V_{ILHS}	-40	-	-	mV
Single-ended input high voltage	V_{IHHS}	-	-	460	mV
Common-mode voltage	V_{CDRXDC}	70	-	330	mV
Differential input impedance	Z_{ID}		100		ohm
HS transmit differential voltage(VOD=VDP-VDN)	$\|V_{OD}\|$	140	200	250	mV
MIPI Characteristics for Low Power Mode					
Pad signal voltage range	V_I	-50	-	1350	mV
Ground shift	V_{GNDSH}	-50	-	50	mV
Logic 0 input threshold	V_{IL}	0	-	550	mV
Logic 1 input threshold	V_{IH}	880	-	1350	mV
Input hysteresis	V_{HYST}	25	-	-	mV
Output low level	V_{OL}	-50	-	50	mV
Output high level	V_{OH}	1.1	1.2	1.3	V
Output impedance of Low Power Transmitter	Z_{OLP}	80	100	125	ohm
Logic 0 contention threshold	$V_{ILCD,MAX}$	-	-	200	mV
Logic 0 contention threshold	$V_{IHCD,MIN}$	450	-	-	mV

FITIPOWER CONFIDENTIAL
NOT DISCLOSURE

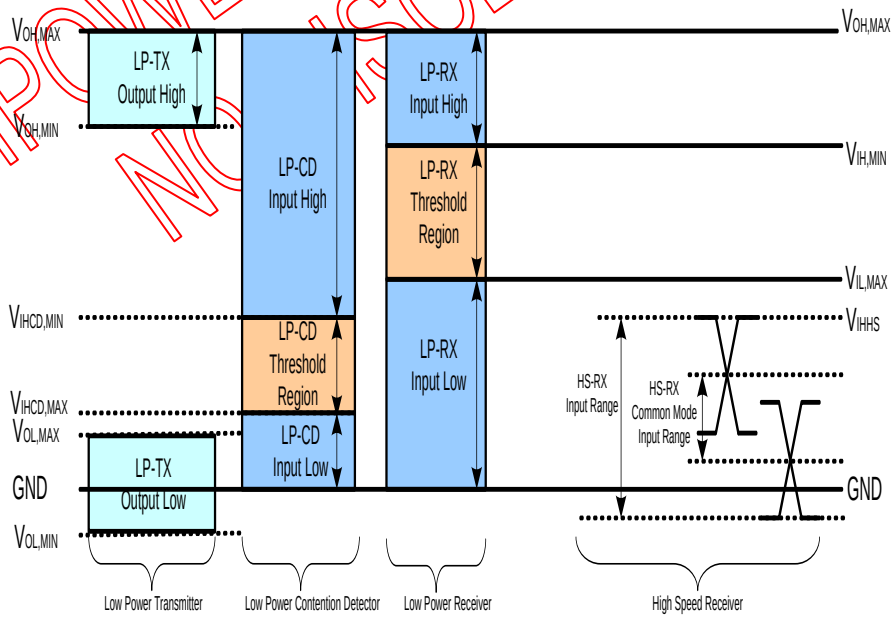

13.3. Power Block DC Characteristic

(VDD=VDD_IF=1.8V, AVDD=8 to 13.5V, GND=AGND=GND_IF=0V,TA=-20 to +85℃)

Parameter	Symbol	Min.	Typ.	Max.	Unit	Condition
Base drive current for PWM	IDRV	-	-	60	mA	DRVA =0.7V
DRV output voltage for PWM	VDRV	0	-	VDD	V	
Feedback voltage for PWM	VFB	1.1	1.2	1.3	V	
Duty cycle maximum	Dmax	-	-	85	%	
VCOM buffer input voltage	VCOMI	1	-	AVDD	V	
VCOM buffer output voltage	VCOMO	VCOMI-0.2	VCOMI	VCOMI+0.2	V	
VCOM buffer output current	IVCOM	-	-	10	mA	VCOMO=5V vs 4.9V

FITIPOWER CONFIDENTIAL
NO DISCLOSURE

14. AC ELECTRICAL CHARACTERISTIC

14.1. Basic AC Characteristic

(VDD=VDD_IF=1.8V, AVDD=8 to 13.5V, GND=AGND=GND_IF=0V,TA=-20 to +85℃)
VDD/GRB AC characteristic

Parameter	Symbol	Min.	Typ.	Max.	Unit	Condition
VDD power slew rate	T_{POR}	-	-	20	ms	From 0 to 90% VDD
GRB active pulse width	T_{GRB}	1	-	-	ms	VDD=VDD_IF= 1.8V
VDD resettle time	T_{RES}	1	-	-	s	

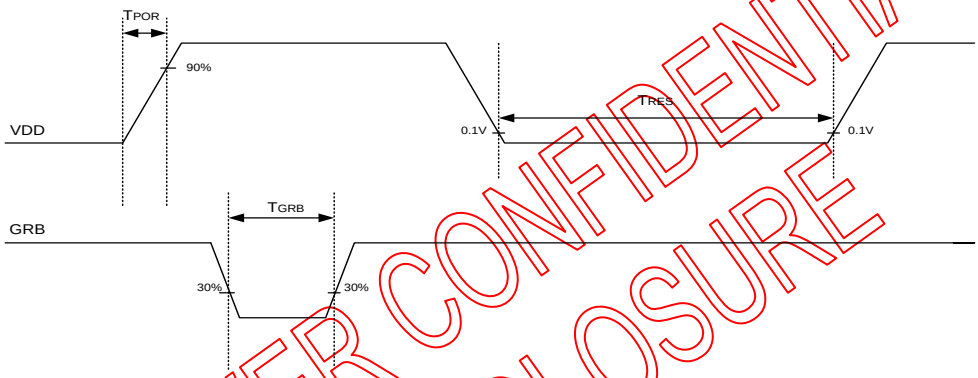

FITIPOWER CONFIDENTIAL
NO DISCLOSURE

14.2. MIPI AC Characteristic

14.2.1. LP Transmitter AC Specification

Parameter		Symbol	Min	Typ	Max	Units	Notes
15%~85% rising time and falling time		T_{RLP} /T_{FLP}	-	-	25	ns	-
30%~85% rising time and falling time		T_{REOT}	-	-	35	ns	-
Pulse width of LP exclusive-OR clock	First LP EXOR clock pulse after STOP state or Last pulse before stop state	$T_{LP\text{-}PULSE\text{-}TX}$	40	-	-	ns	-
	All other pulses		20	-	-	ns	-
Period of the LP EXOR clock		$T_{LP\text{-}PER\text{-}TX}$	90	-	-	mV/ns	-
Slew Rate @C_{LOAD} =0pF		δ V/δ t_{SR}	30	-	500	mV/ns	-
Slew Rate @C_{LOAD} =5pF			30	-	200	mV/ns	-
Slew Rate @C_{LOAD} =20pF			30	-	150	mV/ns	-
Slew Rate @C_{LOAD} =70pF			30	-	100	mV/ns	-
Load Capacitance		T_{RLP}	-	-	70	pF	-

CONFIDENTIAL
DISCLOSURE

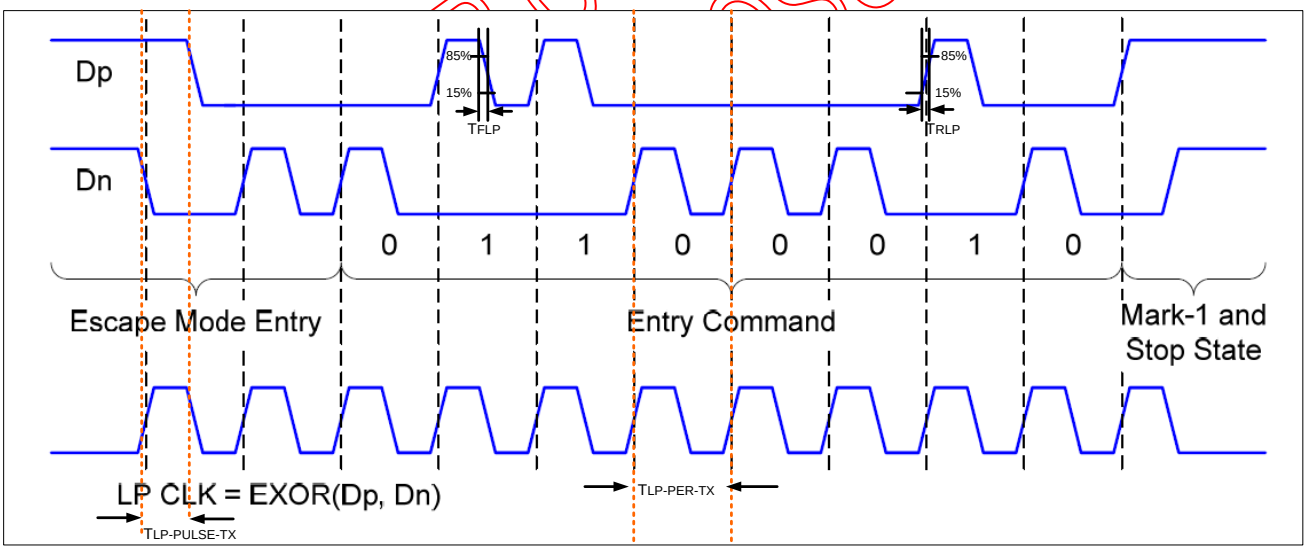

14.2.2. Turnaround Procedure

Turnaround Procedure Operation Timing Parameters

Parameter	Symbol	Min	Typ	Max	Units
Length of any Low-Power state period: Master side	T_{LPX}	50	-	75	ns
Length of any Low-Power state period: Slave side	T_{LPX}	50	55.56	58.34	ns
Ratio of T_{LPX}(Master)/ T_{LPX} (Slave) between Master and Slave side	Ratio T_{LPX}	2/3	-	3/2	
Time-out before new TX side start driving	$T_{TA\text{-}Sure}$	T_{LPX}	-	$2T_{LPX}$	ns
Time to drive LP-00 by new TX	$T_{TA\text{-}GET}$	-	$5T_{LPX}$	-	ns
Time to drive LP-00 after Turnaround Request	$T_{TA\text{-}GO}$	-	$4T_{LPX}$	-	ns

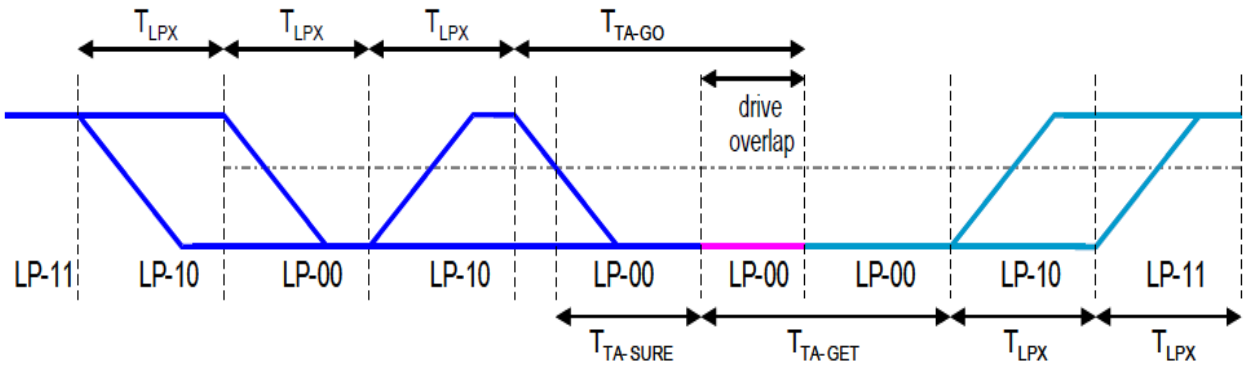

FITIPOWER CONFIDENTIAL
NO DISCLOSURE

14.2.3. High speed transmission

Parameter	Symbol	Min	Typ	Max	Units
UI instantaneous	UI_{INST}	2	-	12.5	ns
Data to Clock Skew(measured at transmitter)	$T_{SKEW(TX)}$	-0.15	-	0.15	UI_{INST}
Data to Clock Setup time(measured at receiver)	$T_{SETUP(RX)}$	0.15	-	-	UI_{INST}
Data to Clock Hold time(measured at receiver)	$T_{HOLD(RX)}$	0.15	-	-	UI_{INST}
20%~80% rise time and fall time	T_R, T_F	150	-	-	ps
		-	-	0.3	UI_{INST}

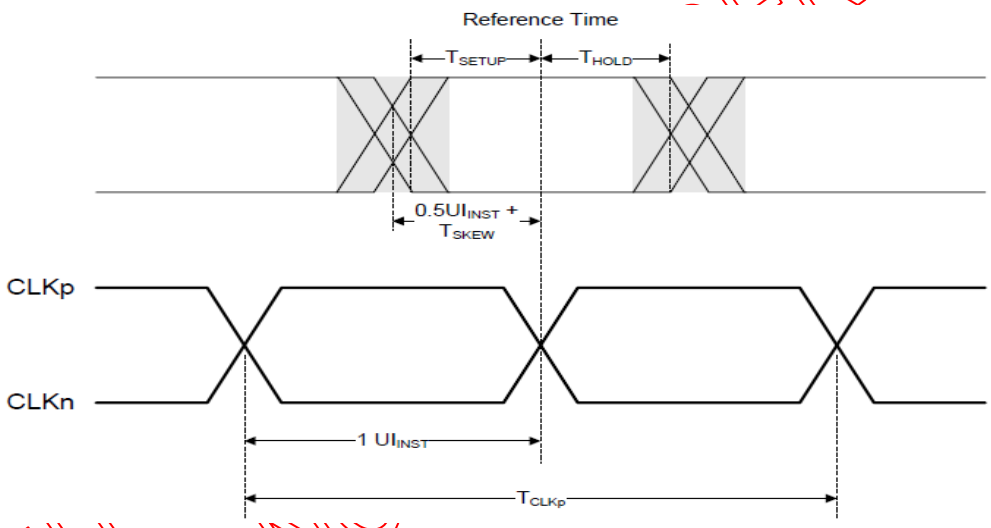

14.2.4. High Speed Clock Transmission

Parameter	Symbol	Min	Typ	Max	Units
Time that the transmitter shall continue sending HS clock after the last associated Data Lane has transitioned to LP mode	$T_{CLK-POST}$	60+52UI	-	-	ns
Detection time that the clock has stopped toggling	$T_{CLK-MISS}$	-	-	60	ns
Time to drive LP-00 to prepare for HS clock transmission	$T_{CLK-PREPARE}$	38	-	95	ns
Minimum lead HS-0 drive period before starting clock	$T_{CLK-PREPARE}$ + $T_{CLK-ZERO}$	300	-	-	ns
Time to enable Clock Lane receiver line termination measured from when Dn cross $V_{IL,MAX}$	$T_{HS-TERM-EN}$	-	-	38	ns
Minimum time that the HS clock must be prior to any associated data lane beginning the transmission from LP to HS mode	$T_{CLK-PRE}$	8	-	-	UI
Time to drive HS differential state after last payload clock bit of a HS transmission burst	$T_{CLK-TRAIL}$	60	-	-	ns

CONFIDENTIAL

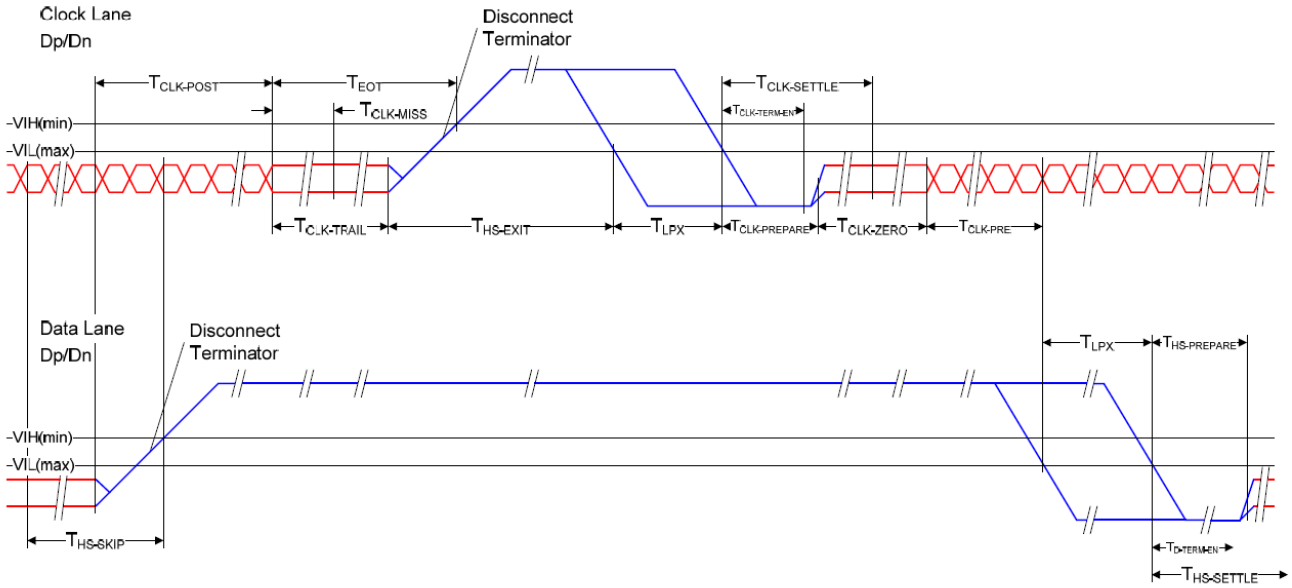

14.2.5. High Speed Data Transmission in Bursts

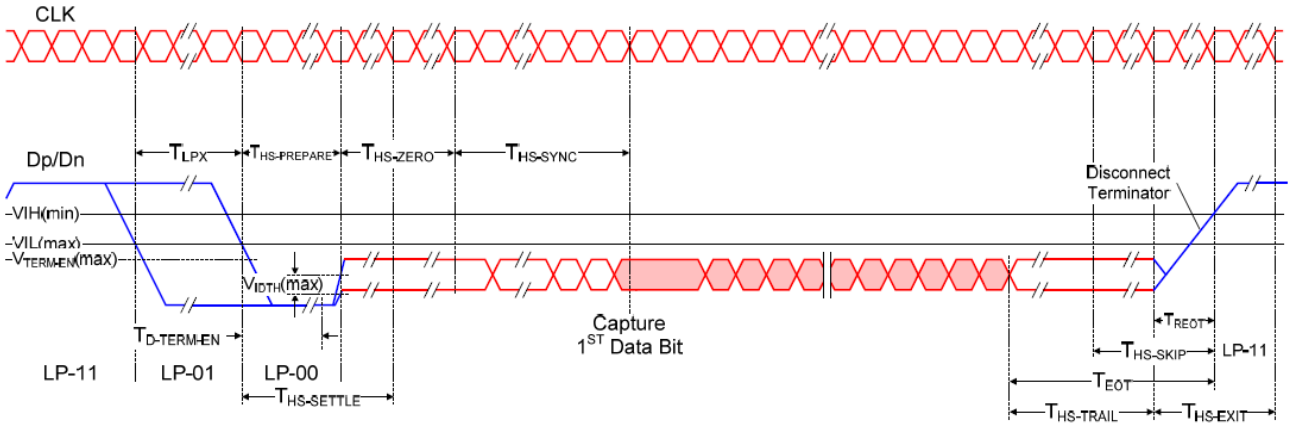

FITIPOWER CONFIDENTIAL
NO DISCLOSURE

14.2.6. LP11 timing request between data transformation

When Clock lane of DSI TX chip always keeps High speed mode, then Clock lane never go back to Low power mode. If Date lane of TX chip needs to transmit the next new data transmission or sequence, after the end of Low power mode or High speed mode or BTA. Then TX chip needs to keep LP-11 stop state before the next new data transmission, no matter in Low power mode or High speed mode or BTA. The LP-11 minimum timing is required for RX chip in the following 9 conditions, include of LP–LP, LP–HS, HS–LP, HS–HS, BTA–BTA, LP–BTA, BTA–LP, HS–BTA, and BTA–HS.This rule is suitable for short or long packet between TX and RX data transmission.

(1) Timing between LP-LP command

FITIPOWER CONFIDENTIAL
NO DISCLOSURE

Parameter	Symbol	Min	Typ	Max	Unit
LP-11 delay to start of the new Escape Mode Entry	T_{DEE}	150	-	-	ns

(2) Timing between LP-HS command

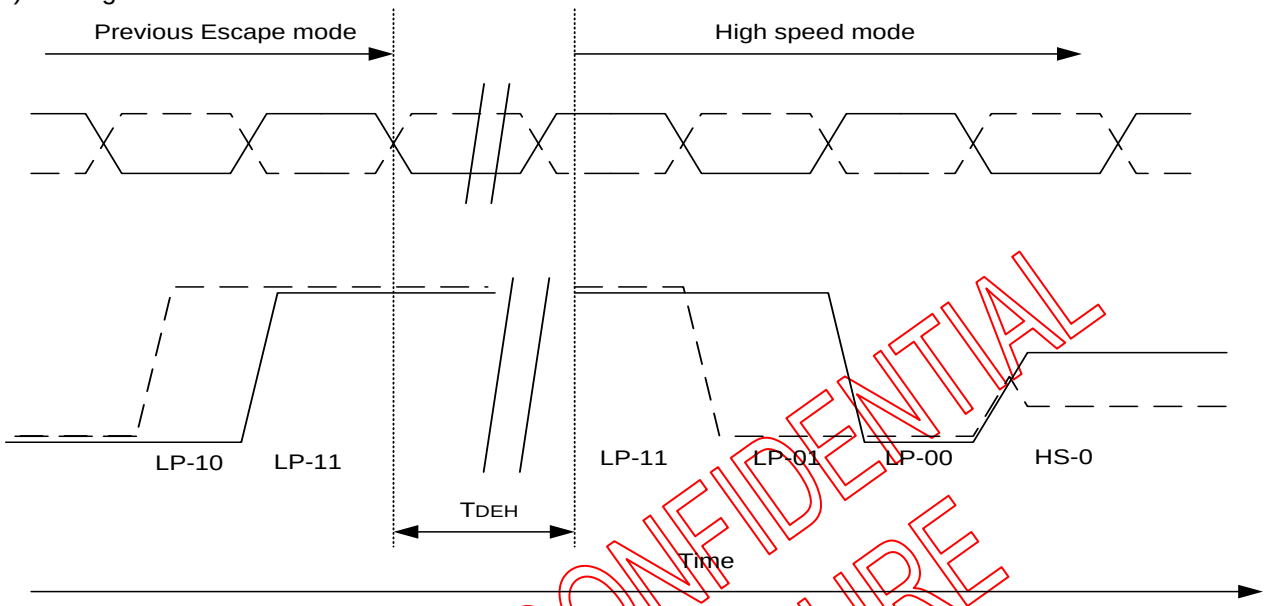

Parameter	Symbol	Min	Typ	Max	Unit
LP-11 delay to start of the Entering High Speed Mode	T_{DEH}	Max(150,32UI)	-	-	ns

(3) Timing between HS-LP command

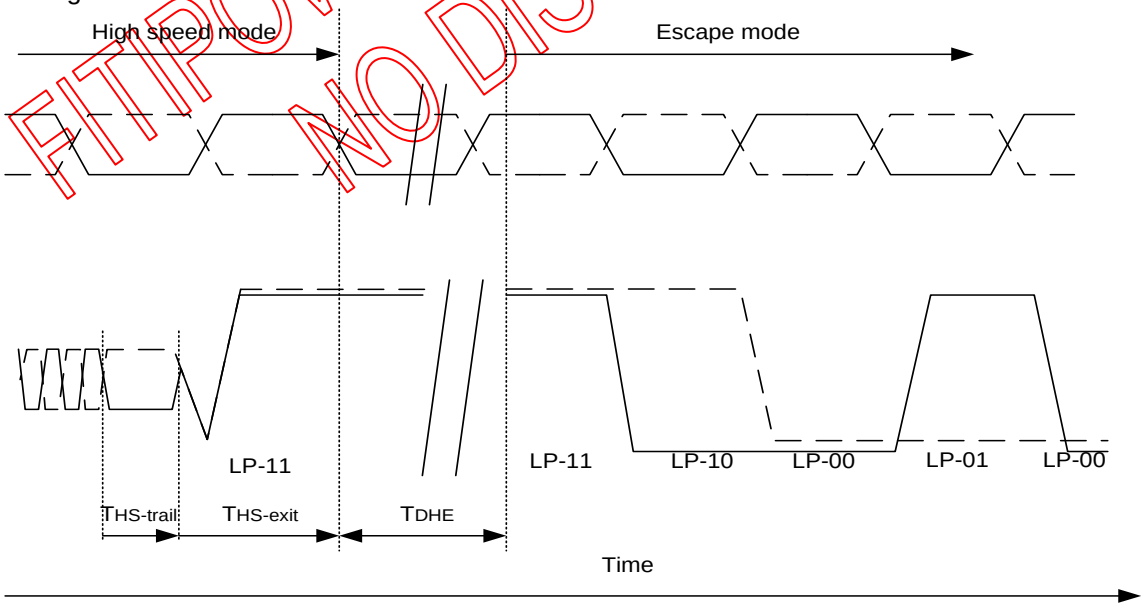

Parameter	Symbol	Min	Typ	Max	Unit
LP-11 delay to start of the Escape Mode Entry	T_{DHE}	Max(150,32UI)	-	-	ns

FITIPOWER CONFIDENTIAL
NO DISCLOSURE

(4) Timing between HS-HS command

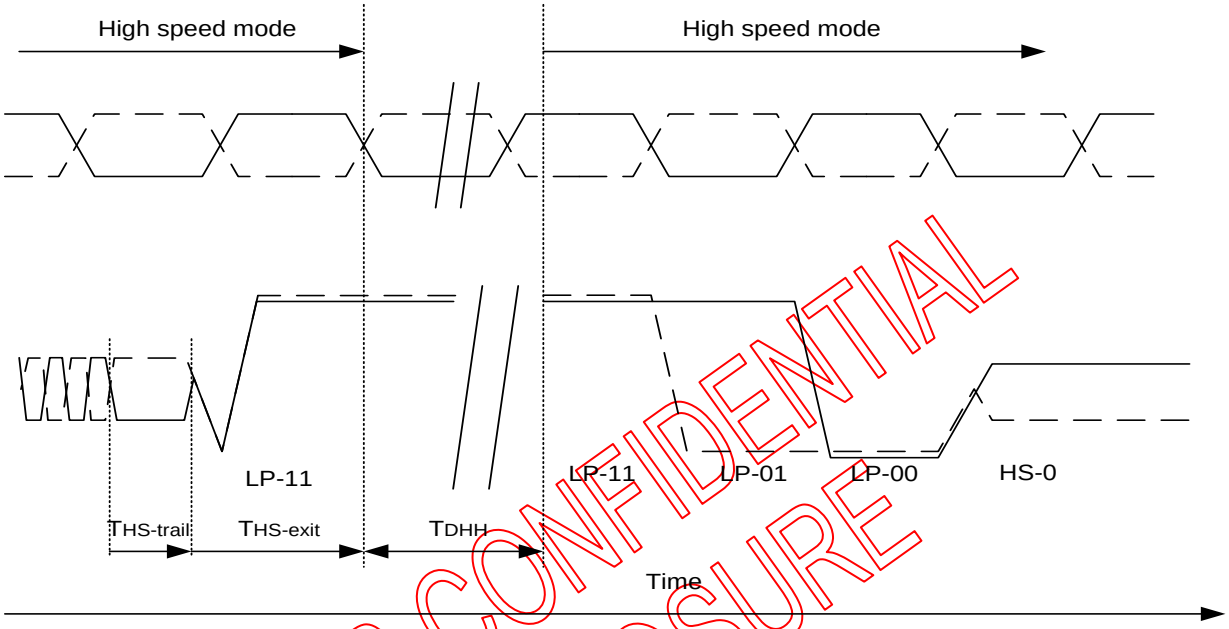

Parameter	Symbol	Min	Typ	Max	Unit
LP-11 delay to start of the Entering High Speed Mode	T_{DHH}	Max(150,32UI)	-	-	ns

(5) Timing between BTA-BTA command

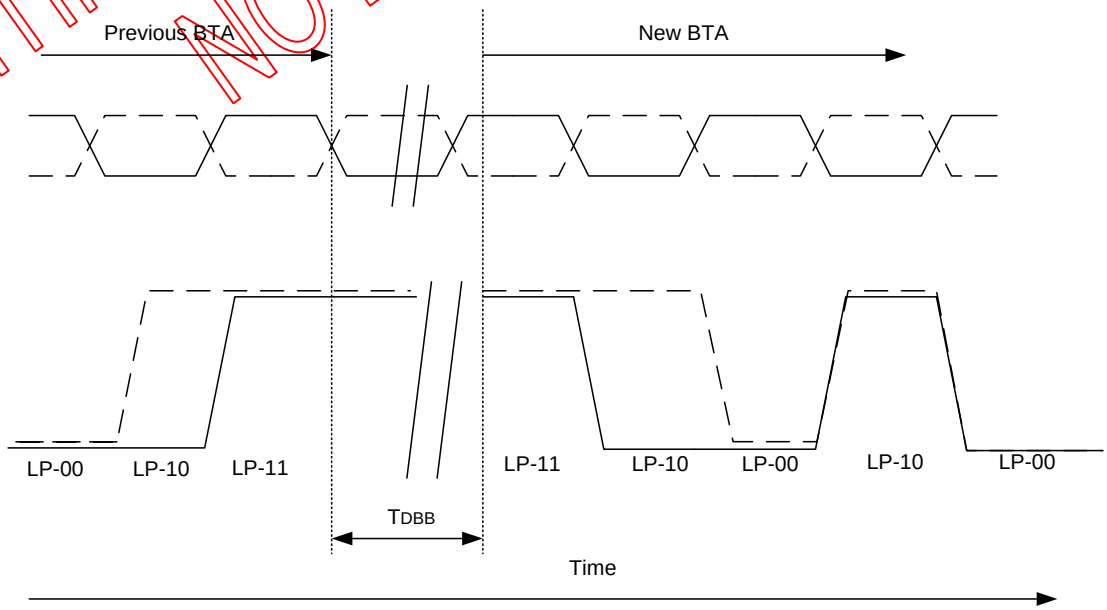

Parameter	Symbol	Min	Typ	Max	Unit
LP-11 delay to start of the new BTA	T_{DBB}	150	-	-	ns

FITIPOWER CONFIDENTIAL
NO DISCLOSURE

(6) Timing between LP-BTA command

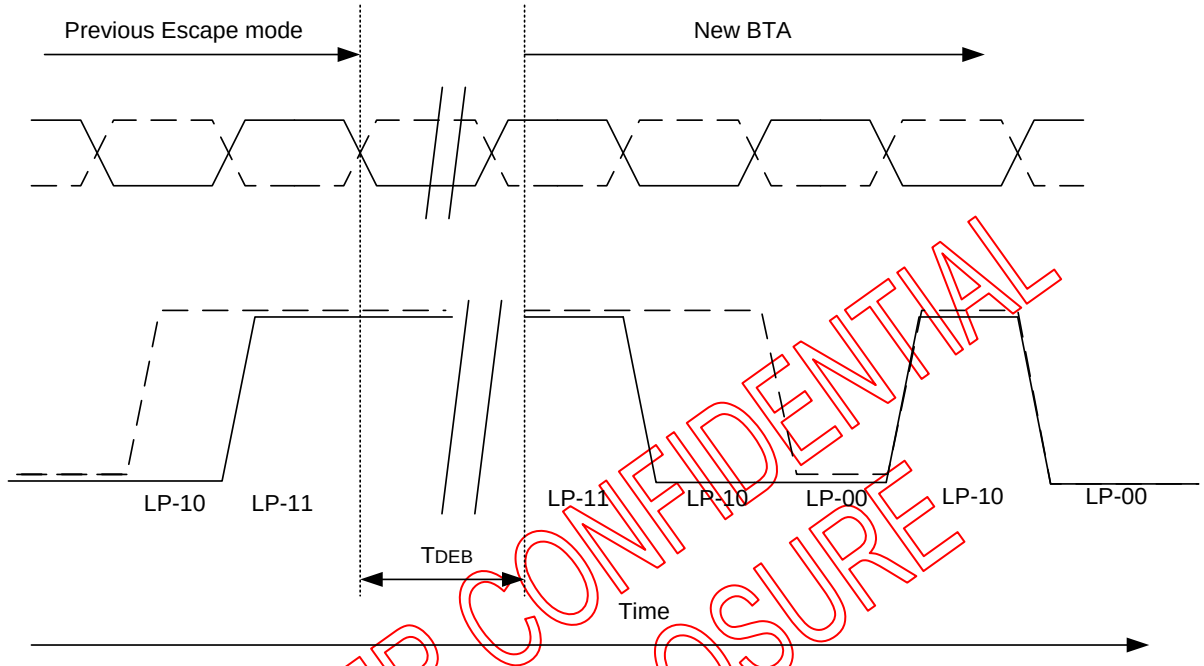

Parameter	Symbol	Min	Typ	Max	Unit
LP-11 delay to start of the new BTA	T_{DEB}	150	-	-	ns

(7) Timing between BTA-LP command

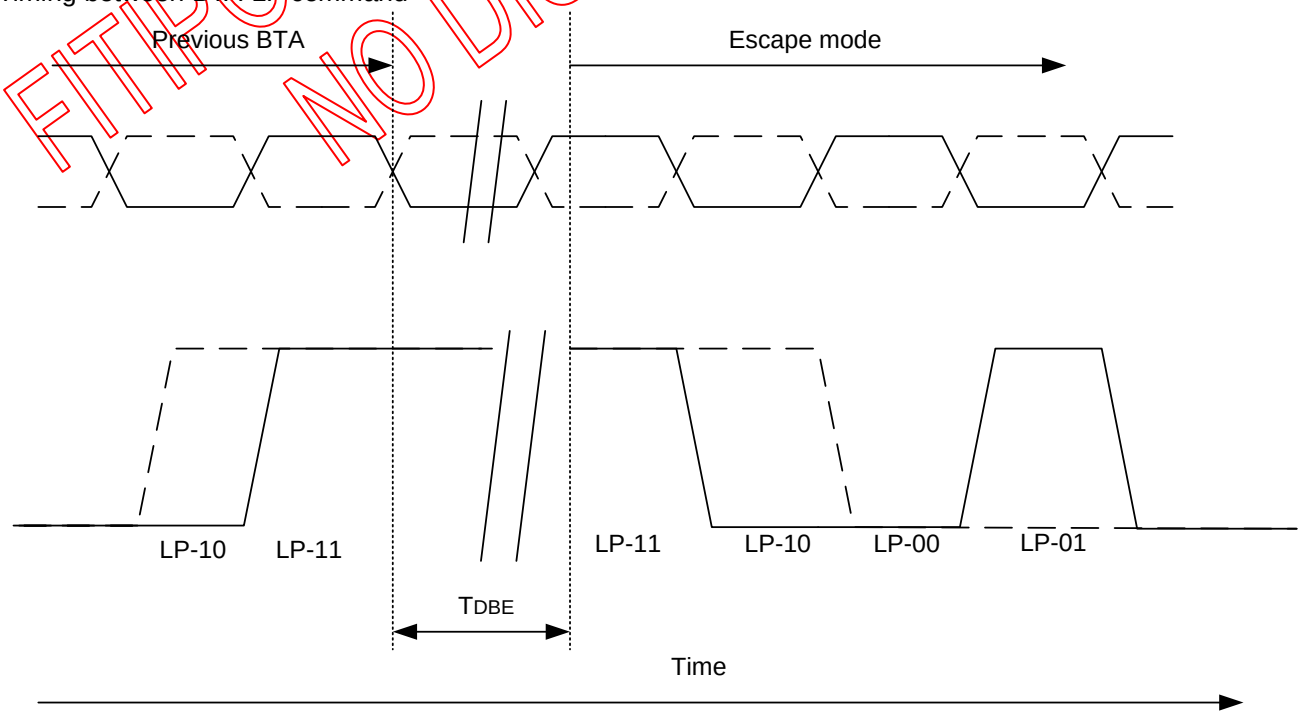

Parameter	Symbol	Min	Typ	Max	Unit
LP-11 delay to start of the Escape Mode Entry	T_{DBE}	150	-	-	ns

FITIPOWER CONFIDENTIAL
NO DISCLOSURE

(8) Timing between HS-BTA command

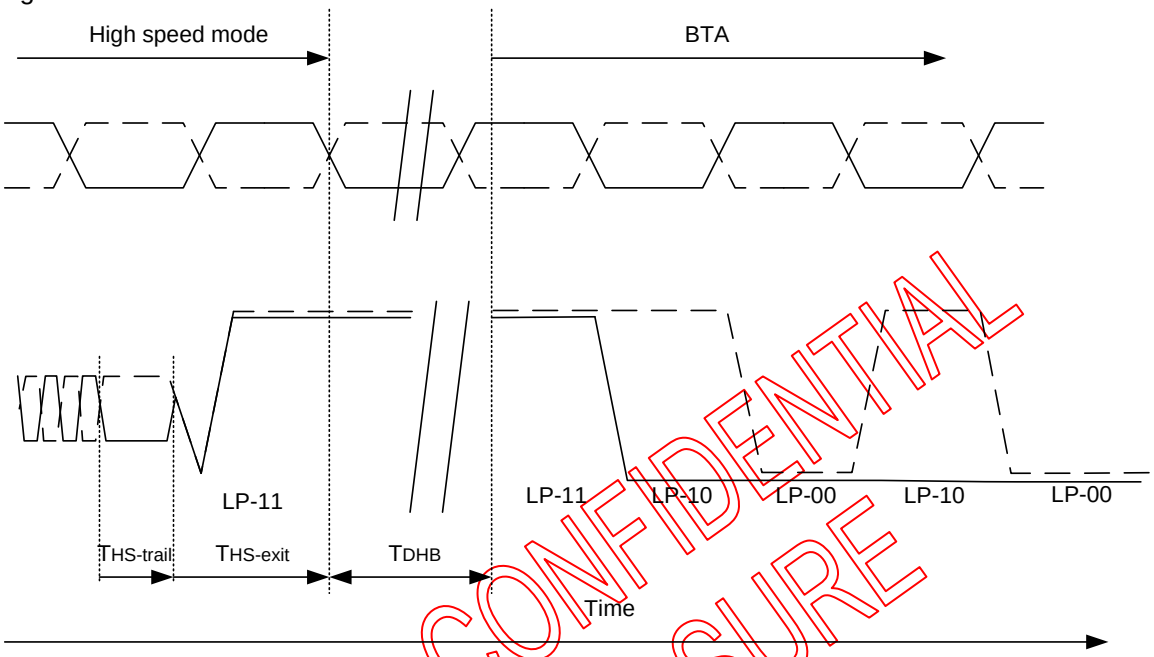

Parameter	Symbol	Min	Typ	Max	Unit
LP-11 delay to start of the BTA	TDHB	Max(150,32UI)	-	-	ns

(9) Timing between BTA-HP command

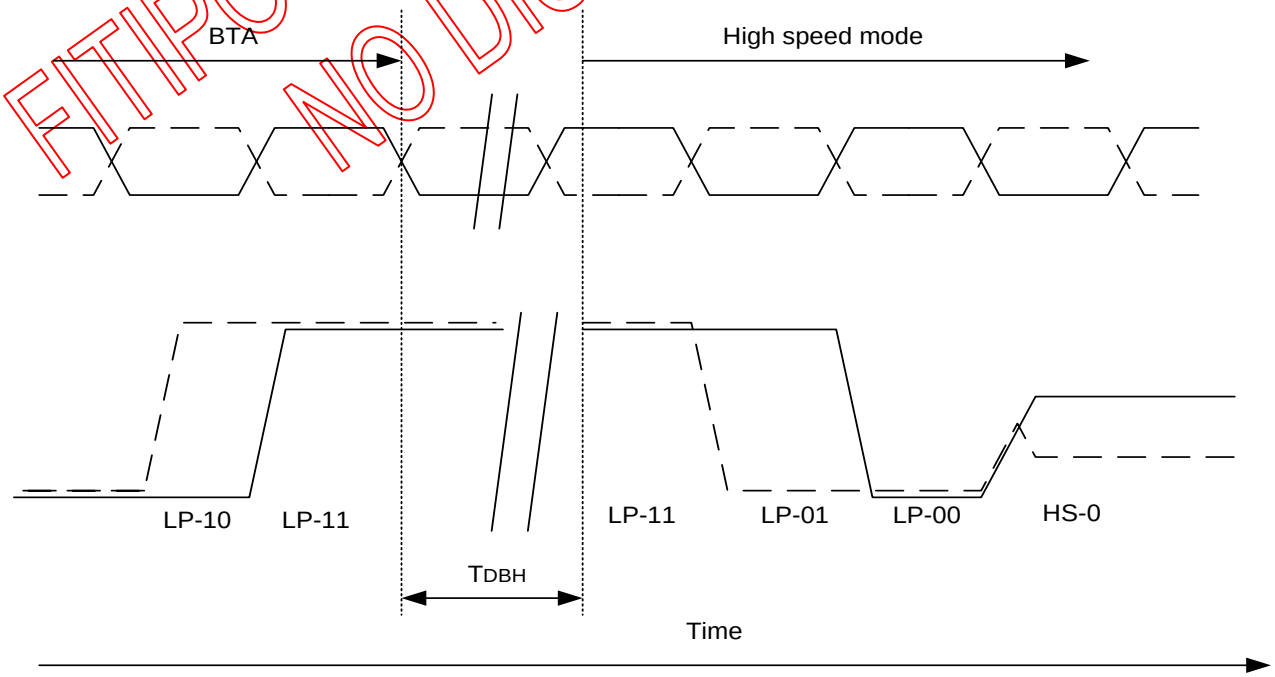

Parameter	Symbol	Min	Typ	Max	Unit
LP-11 delay to start of the Entering High Speed Mode	TDBH	Max(150,32UI)	-	-	ns

FITIPOWER CONFIDENTIAL
NO DISCLOSURE

14.3. Output Timing Table

- Dual gate mode

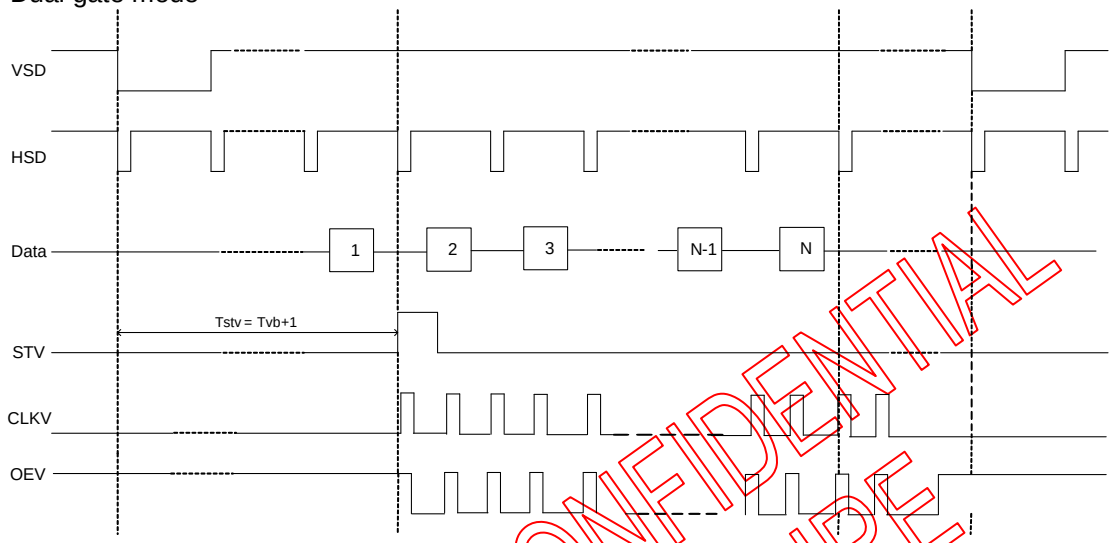

Fig. 11. Vertical output timing

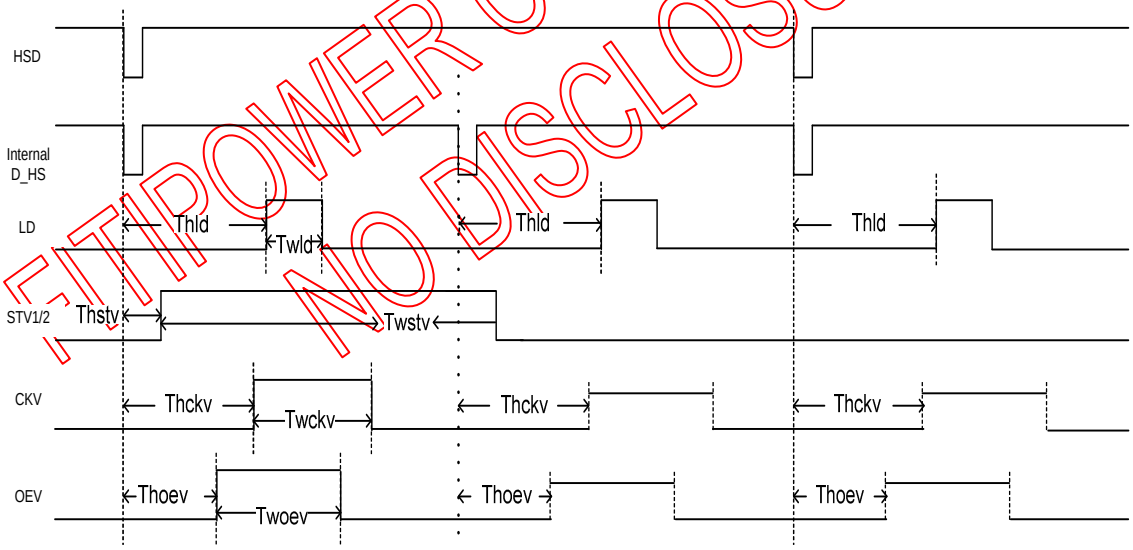

Fig. 11. Gate output timing

FITIPOWER CONFIDENTIAL
NO DISCLOSURE

Analog output AC characteristic

Parameter	Symbol	Min.	Typ.	Max	Unit
Source Driver output stable time	Tsst	-	3	-	μ s

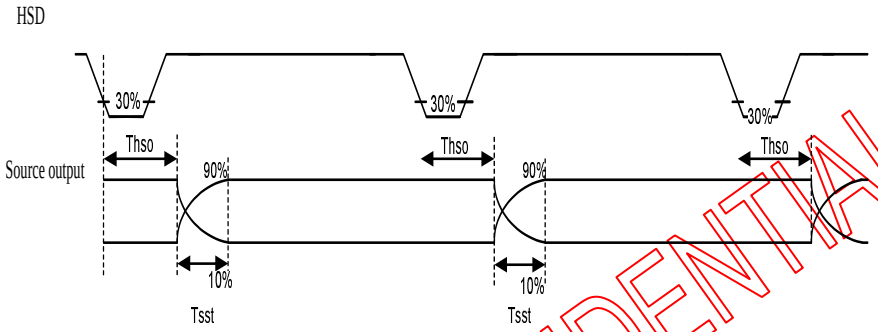

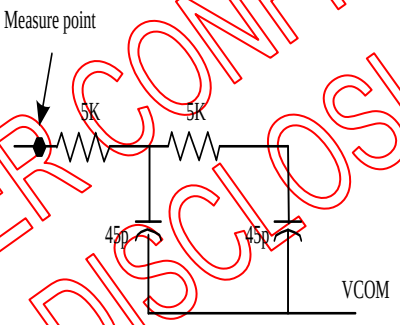

FITIPOWER CONFIDENTIAL
NO DISCLOSURE

15. CHIP OUTLINE DIMENSIONS

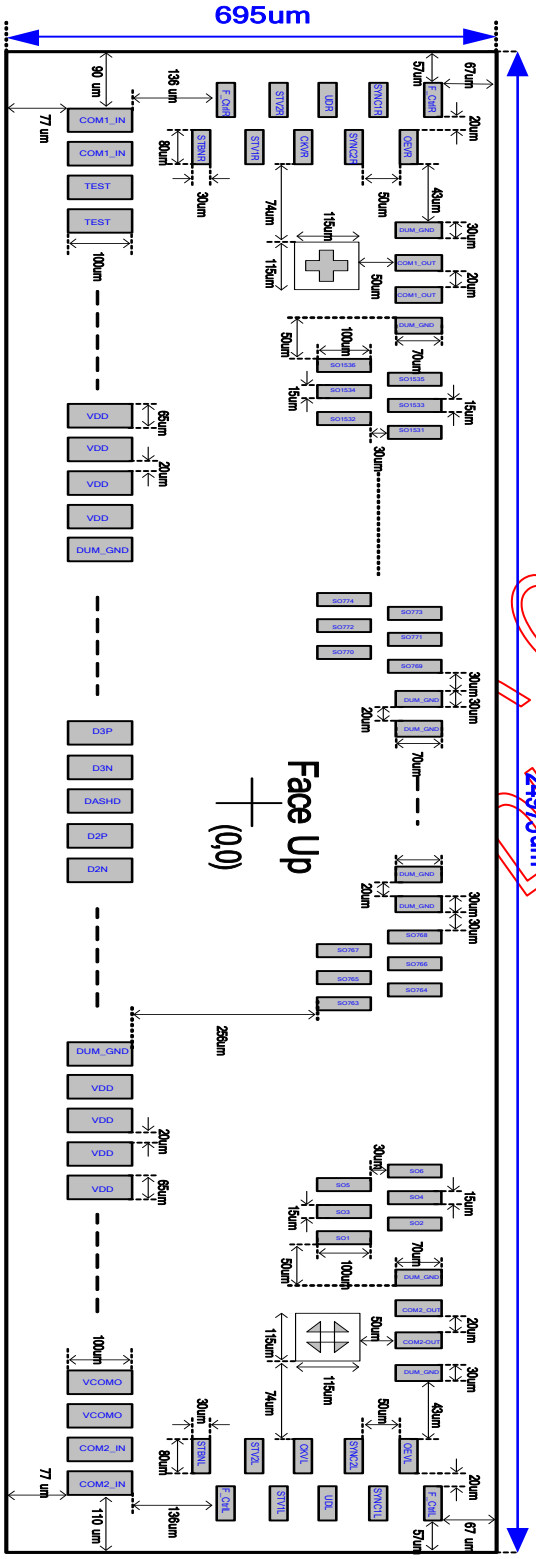

Bump Height:9um

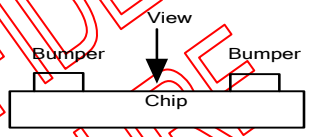

CONFIDENTIAL DISCLOSURE

15.1. Alignment Mark

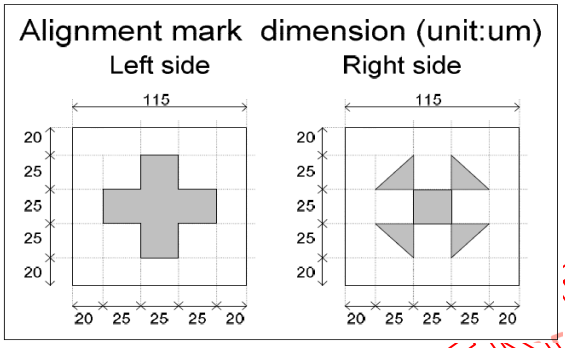

FITIPOWER CONFIDENTIAL
NO DISCLOSURE

16. PAD COORDINATE

Pad	Text Name	CX	CY	W	H
1	COM1_IN	-12377.5	-233	65	100
2	COM1_IN	-12292.5	-233	65	100
3	TP1	-12207.5	-233	65	100
4	TP2	-12122.5	-233	65	100
5	TP3	-12037.5	-233	65	100
6	TP4	-11952.5	-233	65	100
7	SHIELDING	-11867.5	-233	65	100
8	AGND	-11782.5	-233	65	100
9	AGND	-11697.5	-233	65	100
10	AGND	-11612.5	-233	65	100
11	AGND	-11527.5	-233	65	100
12	SHIELDING	-11442.5	-233	65	100
13	AVDD	-11357.5	-233	65	100
14	AVDD	-11272.5	-233	65	100
15	AVDD	-11187.5	-233	65	100
16	AVDD	-11102.5	-233	65	100
17	SHIELDING	-11017.5	-233	65	100
18	GND	-10932.5	-233	65	100
19	GND	-10847.5	-233	65	100
20	GND	-10762.5	-233	65	100
21	GND	-10677.5	-233	65	100
22	SHIELDING	-10592.5	-233	65	100
23	VDD	-10507.5	-233	65	100
24	VDD	-10422.5	-233	65	100
25	VDD	-10337.5	-233	65	100
26	VDD	-10252.5	-233	65	100
27	SHIELDING	-10167.5	-233	65	100
28	TP5	-10082.5	-233	65	100
29	TP6	-9997.5	-233	65	100
30	TP7	-9912.5	-233	65	100
31	TP8	-9827.5	-233	65	100
32	TP9	-9742.5	-233	65	100
33	TP10	-9657.5	-233	65	100
34	TP11	-9572.5	-233	65	100
35	TP12	-9487.5	-233	65	100
36	TP13	-9402.5	-233	65	100
37	TP14	-9317.5	-233	65	100
38	SHIELDING	-9232.5	-233	65	100
39	DIMI	-9147.5	-233	65	100
40	DIMI	-9062.5	-233	65	100
41	NBW	-8977.5	-233	65	100
42	NBW	-8892.5	-233	65	100
43	PINCTL	-8807.5	-233	65	100
44	PINCTL	-8722.5	-233	65	100
45	SHIELDING	-8637.5	-233	65	100
46	DIMO	-8552.5	-233	65	100
47	DIMO	-8467.5	-233	65	100
48	SHIELDING	-8382.5	-233	65	100
49	DITHER	-8297.5	-233	65	100
50	DITHER	-8212.5	-233	65	100
51	HFRC	-8127.5	-233	65	100
52	HFRC	-8042.5	-233	65	100
53	TP15	-7957.5	-233	65	100
54	TP16	-7872.5	-233	65	100
55	FRAME	-7787.5	-233	65	100
56	FRAME	-7702.5	-233	65	100
57	SEL[0]	-7617.5	-233	65	100
58	SEL[0]	-7532.5	-233	65	100
59	SEL[1]	-7447.5	-233	65	100
60	SEL[1]	-7362.5	-233	65	100
61	CSB	-7277.5	-233	65	100
62	CSB	-7192.5	-233	65	100
63	SHIELDING	-7107.5	-233	65	100
64	SDA	-7022.5	-233	65	100
65	SDA	-6937.5	-233	65	100
66	SHIELDING	-6852.5	-233	65	100
67	SCL	-6767.5	-233	65	100
68	SCL	-6682.5	-233	65	100
69	SHIELDING	-6597.5	-233	65	100
70	VDD	-6512.5	-233	65	100
71	VDD	-6427.5	-233	65	100
72	VDD	-6342.5	-233	65	100
73	VDD	-6257.5	-233	65	100
74	SHIELDING	-6172.5	-233	65	100
75	GND	-6087.5	-233	65	100
76	GND	-6002.5	-233	65	100
77	GND	-5917.5	-233	65	100
78	GND	-5832.5	-233	65	100
79	SHIELDING	-5747.5	-233	65	100
80	AVDD	-5662.5	-233	65	100
81	AVDD	-5577.5	-233	65	100
82	AVDD	-5492.5	-233	65	100
83	AVDD	-5407.5	-233	65	100
84	SHIELDING	-5322.5	-233	65	100
85	AGND	-5237.5	-233	65	100
86	AGND	-5152.5	-233	65	100
87	AGND	-5067.5	-233	65	100
88	AGND	-4982.5	-233	65	100
89	SHIELDING	-4897.5	-233	65	100
90	V1	-4812.5	-233	65	100
91	V1	-4727.5	-233	65	100
92	V2	-4642.5	-233	65	100
93	V2	-4557.5	-233	65	100
94	V3	-4472.5	-233	65	100
95	V3	-4387.5	-233	65	100
96	V4	-4302.5	-233	65	100
97	V4	-4217.5	-233	65	100
98	V5	-4132.5	-233	65	100
99	V5	-4047.5	-233	65	100
100	V6	-3962.5	-233	65	100
101	V6	-3877.5	-233	65	100
102	V7	-3792.5	-233	65	100
103	V7	-3707.5	-233	65	100
104	GAMH	-3622.5	-233	65	100
105	GAMH	-3537.5	-233	65	100
106	SHIELDING	-3452.5	-233	65	100
107	DASHD	-3367.5	-233	65	100
108	LVFMT	-3282.5	-233	65	100
109	DASHD	-3197.5	-233	65	100
110	LVBIT	-3112.5	-233	65	100
111	DASHD	-3027.5	-233	65	100
112	TP17	-2942.5	-233	65	100
113	GND_IF	-2857.5	-233	65	100
114	GND_IF	-2772.5	-233	65	100
115	GND_IF	-2687.5	-233	65	100
116	GND_IF	-2602.5	-233	65	100
117	D3P	-2517.5	-233	65	100
118	D3N	-2432.5	-233	65	100
119	DASHD	-2347.5	-233	65	100
120	D2P	-2262.5	-233	65	100
121	D2N	-2177.5	-233	65	100

FITIPOWER CONFIDENTIAL DOCUMENT

122	DASHD	-2092.5	-233	65	100
123	CLKP	-2007.5	-233	65	100
124	CLKN	-1922.5	-233	65	100
125	DASHD	-1837.5	-233	65	100
126	D1P	-1752.5	-233	65	100
127	D1N	-1667.5	-233	65	100
128	DASHD	-1582.5	-233	65	100
129	D0P	-1497.5	-233	65	100
130	D0N	-1412.5	-233	65	100
131	DASHD	-1327.5	-233	65	100
132	VDD_IF	-1242.5	-233	65	100
133	VDD_IF	-1157.5	-233	65	100
134	VDD_IF	-1072.5	-233	65	100
135	VDD_IF	-987.5	-233	65	100
136	REV	-902.5	-233	65	100
137	DASHD	-817.5	-233	65	100
138	VDDLV	-732.5	-233	65	100
139	VDDLV	-647.5	-233	65	100
140	VDDLV	-562.5	-233	65	100
141	VDDLV	-477.5	-233	65	100
142	VDDLV	-392.5	-233	65	100
143	VDDLV	-307.5	-233	65	100
144	TP18	-222.5	-233	65	100
145	TP19	-137.5	-233	65	100
146	DASHD	-52.5	-233	65	100
147	TP20	32.5	-233	65	100
148	TP21	117.5	-233	65	100
149	DASHD	202.5	-233	65	100
150	TP22	287.5	-233	65	100
151	TP23	372.5	-233	65	100
152	DASHD	457.5	-233	65	100
153	TP24	542.5	-233	65	100
154	TP25	627.5	-233	65	100
155	DASHD	712.5	-233	65	100
156	TP26	797.5	-233	65	100
157	TP27	882.5	-233	65	100
158	TP28	967.5	-233	65	100
159	TP29	1052.5	-233	65	100
160	TP30	1137.5	-233	65	100
161	DASHD	1222.5	-233	65	100
162	SHIELDING	1307.5	-233	65	100
163	GAML	1392.5	-233	65	100
164	GAML	1477.5	-233	65	100
165	V8	1562.5	-233	65	100
166	V8	1647.5	-233	65	100
167	V9	1732.5	-233	65	100
168	V9	1817.5	-233	65	100
169	V10	1902.5	-233	65	100
170	V10	1987.5	-233	65	100
171	V11	2072.5	-233	65	100
172	V11	2157.5	-233	65	100
173	V12	2242.5	-233	65	100
174	V12	2327.5	-233	65	100
175	V13	2412.5	-233	65	100
176	V13	2497.5	-233	65	100
177	V14	2582.5	-233	65	100
178	V14	2667.5	-233	65	100
179	SHIELDING	2752.5	-233	65	100
180	AGND	2837.5	-233	65	100
181	AGND	2922.5	-233	65	100
182	AGND	3007.5	-233	65	100

183	AGND	3092.5	-233	65	100
184	SHIELDING	3177.5	-233	65	100
185	AVDD	3262.5	-233	65	100
186	AVDD	3347.5	-233	65	100
187	AVDD	3432.5	-233	65	100
188	AVDD	3517.5	-233	65	100
189	SHIELDING	3602.5	-233	65	100
190	GND	3687.5	-233	65	100
191	GND	3772.5	-233	65	100
192	GND	3857.5	-233	65	100
193	GND	3942.5	-233	65	100
194	SHIELDING	4027.5	-233	65	100
195	VDD	4112.5	-233	65	100
196	VDD	4197.5	-233	65	100
197	VDD	4282.5	-233	65	100
198	VDD	4367.5	-233	65	100
199	SHIELDING	4452.5	-233	65	100
200	DUAL	4537.5	-233	65	100
201	DUAL	4622.5	-233	65	100
202	MASL	4707.5	-233	65	100
203	MASL	4792.5	-233	65	100
204	MASLOC	4877.5	-233	65	100
205	MASLOC	4962.5	-233	65	100
206	CABC_EN[0]	5047.5	-233	65	100
207	CABC_EN[0]	5132.5	-233	65	100
208	CABC_EN[1]	5217.5	-233	65	100
209	CABC_EN[1]	5302.5	-233	65	100
210	OPDRV	5387.5	-233	65	100
211	OPDRV	5472.5	-233	65	100
212	MODE	5557.5	-233	65	100
213	MODE	5642.5	-233	65	100
214	IFSEL	5727.5	-233	65	100
215	IFSEL	5812.5	-233	65	100
216	BIST	5897.5	-233	65	100
217	BIST	5982.5	-233	65	100
218	RES[0]	6067.5	-233	65	100
219	RES[0]	6152.5	-233	65	100
220	RES[1]	6237.5	-233	65	100
221	RES[1]	6322.5	-233	65	100
222	TP_TEST	6407.5	-233	65	100
223	TP_TEST	6492.5	-233	65	100
224	STBYB	6577.5	-233	65	100
225	STBYB	6662.5	-233	65	100
226	GRB	6747.5	-233	65	100
227	GRB	6832.5	-233	65	100
228	SHLR	6917.5	-233	65	100
229	SHLR	7002.5	-233	65	100
230	UPDN	7087.5	-233	65	100
231	UPDN	7172.5	-233	65	100
232	SHIELDING	7257.5	-233	65	100
233	TP31	7342.5	-233	65	100
234	TP32	7427.5	-233	65	100
235	TP33	7512.5	-233	65	100
236	TP34	7597.5	-233	65	100
237	TP35	7682.5	-233	65	100
238	TP36	7767.5	-233	65	100
239	TP37	7852.5	-233	65	100
240	TP38	7937.5	-233	65	100
241	TP39	8022.5	-233	65	100
242	TP40	8107.5	-233	65	100
243	TP41	8192.5	-233	65	100

FITIPOWER CONFIDENTIAL DOCUMENT

244	TP42	8277.5	-233	65	100
245	TP43	8362.5	-233	65	100
246	TP44	8447.5	-233	65	100
247	SHIELDING	8532.5	-233	65	100
248	VDD	8617.5	-233	65	100
249	VDD	8702.5	-233	65	100
250	VDD	8787.5	-233	65	100
251	VDD	8872.5	-233	65	100
252	SHIELDING	8957.5	-233	65	100
253	GND	9042.5	-233	65	100
254	GND	9127.5	-233	65	100
255	GND	9212.5	-233	65	100
256	GND	9297.5	-233	65	100
257	SHIELDING	9382.5	-233	65	100
258	AVDD	9467.5	-233	65	100
259	AVDD	9552.5	-233	65	100
260	AVDD	9637.5	-233	65	100
261	AVDD	9722.5	-233	65	100
262	SHIELDING	9807.5	-233	65	100
263	AGND	9892.5	-233	65	100
264	AGND	9977.5	-233	65	100
265	AGND	10062.5	-233	65	100
266	AGND	10147.5	-233	65	100
267	SHIELDING	10232.5	-233	65	100
268	TP45	10317.5	-233	65	100
269	VCOMI	10402.5	-233	65	100
270	VCOMI	10487.5	-233	65	100
271	PWR_EN	10572.5	-233	65	100
272	PWR_EN	10657.5	-233	65	100
273	FBL	10742.5	-233	65	100
274	FBL	10827.5	-233	65	100
275	FBH	10912.5	-233	65	100
276	FBH	10997.5	-233	65	100
277	FBA	11082.5	-233	65	100
278	FBA	11167.5	-233	65	100
279	AVDDG	11252.5	-233	65	100
280	AVDDG	11337.5	-233	65	100
281	DRVA	11422.5	-233	65	100
282	DRVA	11507.5	-233	65	100
283	DRVH	11592.5	-233	65	100
284	DRVH	11677.5	-233	65	100
285	DRVL	11762.5	-233	65	100
286	DRVL	11847.5	-233	65	100
287	DRVL_B	11932.5	-233	65	100
288	DRVL_B	12017.5	-233	65	100
289	VCOMO	12102.5	-233	65	100
290	VCOMO	12187.5	-233	65	100
291	COM2_IN	12272.5	-233	65	100
292	COM2_IN	12357.5	-233	65	100
293	STBNL	12303	-72	80	30
294	F_CtrlL	12403	-32	80	30
295	STV2L	12303	8	80	30
296	STV1L	12403	48	80	30
297	CKVL	12303	88	80	30
298	UDL	12403	128	80	30
299	SYNC2L	12303	168	80	30
300	SYNC1L	12403	208	80	30
301	OEVL	12303	248	80	30
302	F_CtrlL	12403	288	80	30
303	SHIELDING	12205	268	30	70
304	COM2_OUT	12155	268	30	70

305	COM2_OUT	12105	268	30	70
306	SHIELDING	12055	268	30	70
307	SO1	12012.5	123	15	100
308	SO2	11997.5	253	15	100
309	SO3	11982.5	123	15	100
310	SO4	11967.5	253	15	100
311	SO5	11952.5	123	15	100
312	SO6	11937.5	253	15	100
313	SO7	11922.5	123	15	100
314	SO8	11907.5	253	15	100
315	SO9	11892.5	123	15	100
316	SO10	11877.5	253	15	100
317	SO11	11862.5	123	15	100
318	SO12	11847.5	253	15	100
319	SO13	11832.5	123	15	100
320	SO14	11817.5	253	15	100
321	SO15	11802.5	123	15	100
322	SO16	11787.5	253	15	100
323	SO17	11772.5	123	15	100
324	SO18	11757.5	253	15	100
325	SO19	11742.5	123	15	100
326	SO20	11727.5	253	15	100
327	SO21	11712.5	123	15	100
328	SO22	11697.5	253	15	100
329	SO23	11682.5	123	15	100
330	SO24	11667.5	253	15	100
331	SO25	11652.5	123	15	100
332	SO26	11637.5	253	15	100
333	SO27	11622.5	123	15	100
334	SO28	11607.5	253	15	100
335	SO29	11592.5	123	15	100
336	SO30	11577.5	253	15	100
337	SO31	11562.5	123	15	100
338	SO32	11547.5	253	15	100
339	SO33	11532.5	123	15	100
340	SO34	11517.5	253	15	100
341	SO35	11502.5	123	15	100
342	SO36	11487.5	253	15	100
343	SO37	11472.5	123	15	100
344	SO38	11457.5	253	15	100
345	SO39	11442.5	123	15	100
346	SO40	11427.5	253	15	100
347	SO41	11412.5	123	15	100
348	SO42	11397.5	253	15	100
349	SO43	11382.5	123	15	100
350	SO44	11367.5	253	15	100
351	SO45	11352.5	123	15	100
352	SO46	11337.5	253	15	100
353	SO47	11322.5	123	15	100
354	SO48	11307.5	253	15	100
355	SO49	11292.5	123	15	100
356	SO50	11277.5	253	15	100
357	SO51	11262.5	123	15	100
358	SO52	11247.5	253	15	100
359	SO53	11232.5	123	15	100
360	SO54	11217.5	253	15	100
361	SO55	11202.5	123	15	100
362	SO56	11187.5	253	15	100
363	SO57	11172.5	123	15	100
364	SO58	11157.5	253	15	100
365	SO59	11142.5	123	15	100

FITIPOWER CONFIDENTIAL DOCUMENT

366	SO60	11127.5	253	15	100
367	SO61	11112.5	123	15	100
368	SO62	11097.5	253	15	100
369	SO63	11082.5	123	15	100
370	SO64	11067.5	253	15	100
371	SO65	11052.5	123	15	100
372	SO66	11037.5	253	15	100
373	SO67	11022.5	123	15	100
374	SO68	11007.5	253	15	100
375	SO69	10992.5	123	15	100
376	SO70	10977.5	253	15	100
377	SO71	10962.5	123	15	100
378	SO72	10947.5	253	15	100
379	SO73	10932.5	123	15	100
380	SO74	10917.5	253	15	100
381	SO75	10902.5	123	15	100
382	SO76	10887.5	253	15	100
383	SO77	10872.5	123	15	100
384	SO78	10857.5	253	15	100
385	SO79	10842.5	123	15	100
386	SO80	10827.5	253	15	100
387	SO81	10812.5	123	15	100
388	SO82	10797.5	253	15	100
389	SO83	10782.5	123	15	100
390	SO84	10767.5	253	15	100
391	SO85	10752.5	123	15	100
392	SO86	10737.5	253	15	100
393	SO87	10722.5	123	15	100
394	SO88	10707.5	253	15	100
395	SO89	10692.5	123	15	100
396	SO90	10677.5	253	15	100
397	SO91	10662.5	123	15	100
398	SO92	10647.5	253	15	100
399	SO93	10632.5	123	15	100
400	SO94	10617.5	253	15	100
401	SO95	10602.5	123	15	100
402	SO96	10587.5	253	15	100
403	SO97	10572.5	123	15	100
404	SO98	10557.5	253	15	100
405	SO99	10542.5	123	15	100
406	SO100	10527.5	253	15	100
407	SO101	10512.5	123	15	100
408	SO102	10497.5	253	15	100
409	SO103	10482.5	123	15	100
410	SO104	10467.5	253	15	100
411	SO105	10452.5	123	15	100
412	SO106	10437.5	253	15	100
413	SO107	10422.5	123	15	100
414	SO108	10407.5	253	15	100
415	SO109	10392.5	123	15	100
416	SO110	10377.5	253	15	100
417	SO111	10362.5	123	15	100
418	SO112	10347.5	253	15	100
419	SO113	10332.5	123	15	100
420	SO114	10317.5	253	15	100
421	SO115	10302.5	123	15	100
422	SO116	10287.5	253	15	100
423	SO117	10272.5	123	15	100
424	SO118	10257.5	253	15	100
425	SO119	10242.5	123	15	100
426	SO120	10227.5	253	15	100

427	SO121	10212.5	123	15	100
428	SO122	10197.5	253	15	100
429	SO123	10182.5	123	15	100
430	SO124	10167.5	253	15	100
431	SO125	10152.5	123	15	100
432	SO126	10137.5	253	15	100
433	SO127	10122.5	123	15	100
434	SO128	10107.5	253	15	100
435	SO129	10092.5	123	15	100
436	SO130	10077.5	253	15	100
437	SO131	10062.5	123	15	100
438	SO132	10047.5	253	15	100
439	SO133	10032.5	123	15	100
440	SO134	10017.5	253	15	100
441	SO135	10002.5	123	15	100
442	SO136	9987.5	253	15	100
443	SO137	9972.5	123	15	100
444	SO138	9957.5	253	15	100
445	SO139	9942.5	123	15	100
446	SO140	9927.5	253	15	100
447	SO141	9912.5	123	15	100
448	SO142	9897.5	253	15	100
449	SO143	9882.5	123	15	100
450	SO144	9867.5	253	15	100
451	SO145	9852.5	123	15	100
452	SO146	9837.5	253	15	100
453	SO147	9822.5	123	15	100
454	SO148	9807.5	253	15	100
455	SO149	9792.5	123	15	100
456	SO150	9777.5	253	15	100
457	SO151	9762.5	123	15	100
458	SO152	9747.5	253	15	100
459	SO153	9732.5	123	15	100
460	SO154	9717.5	253	15	100
461	SO155	9702.5	123	15	100
462	SO156	9687.5	253	15	100
463	SO157	9672.5	123	15	100
464	SO158	9657.5	253	15	100
465	SO159	9642.5	123	15	100
466	SO160	9627.5	253	15	100
467	SO161	9612.5	123	15	100
468	SO162	9597.5	253	15	100
469	SO163	9582.5	123	15	100
470	SO164	9567.5	253	15	100
471	SO165	9552.5	123	15	100
472	SO166	9537.5	253	15	100
473	SO167	9522.5	123	15	100
474	SO168	9507.5	253	15	100
475	SO169	9492.5	123	15	100
476	SO170	9477.5	253	15	100
477	SO171	9462.5	123	15	100
478	SO172	9447.5	253	15	100
479	SO173	9432.5	123	15	100
480	SO174	9417.5	253	15	100
481	SO175	9402.5	123	15	100
482	SO176	9387.5	253	15	100
483	SO177	9372.5	123	15	100
484	SO178	9357.5	253	15	100
485	SO179	9342.5	123	15	100
486	SO180	9327.5	253	15	100
487	SO181	9312.5	123	15	100

FITIPOWER CONFIDENTIAL

488	SO182	9297.5	253	15	100
489	SO183	9282.5	123	15	100
490	SO184	9267.5	253	15	100
491	SO185	9252.5	123	15	100
492	SO186	9237.5	253	15	100
493	SO187	9222.5	123	15	100
494	SO188	9207.5	253	15	100
495	SO189	9192.5	123	15	100
496	SO190	9177.5	253	15	100
497	SO191	9162.5	123	15	100
498	SO192	9147.5	253	15	100
499	SO193	9132.5	123	15	100
500	SO194	9117.5	253	15	100
501	SO195	9102.5	123	15	100
502	SO196	9087.5	253	15	100
503	SO197	9072.5	123	15	100
504	SO198	9057.5	253	15	100
505	SO199	9042.5	123	15	100
506	SO200	9027.5	253	15	100
507	SO201	9012.5	123	15	100
508	SO202	8997.5	253	15	100
509	SO203	8982.5	123	15	100
510	SO204	8967.5	253	15	100
511	SO205	8952.5	123	15	100
512	SO206	8937.5	253	15	100
513	SO207	8922.5	123	15	100
514	SO208	8907.5	253	15	100
515	SO209	8892.5	123	15	100
516	SO210	8877.5	253	15	100
517	SO211	8862.5	123	15	100
518	SO212	8847.5	253	15	100
519	SO213	8832.5	123	15	100
520	SO214	8817.5	253	15	100
521	SO215	8802.5	123	15	100
522	SO216	8787.5	253	15	100
523	SO217	8772.5	123	15	100
524	SO218	8757.5	253	15	100
525	SO219	8742.5	123	15	100
526	SO220	8727.5	253	15	100
527	SO221	8712.5	123	15	100
528	SO222	8697.5	253	15	100
529	SO223	8682.5	123	15	100
530	SO224	8667.5	253	15	100
531	SO225	8652.5	123	15	100
532	SO226	8637.5	253	15	100
533	SO227	8622.5	123	15	100
534	SO228	8607.5	253	15	100
535	SO229	8592.5	123	15	100
536	SO230	8577.5	253	15	100
537	SO231	8562.5	123	15	100
538	SO232	8547.5	253	15	100
539	SO233	8532.5	123	15	100
540	SO234	8517.5	253	15	100
541	SO235	8502.5	123	15	100
542	SO236	8487.5	253	15	100
543	SO237	8472.5	123	15	100
544	SO238	8457.5	253	15	100
545	SO239	8442.5	123	15	100
546	SO240	8427.5	253	15	100
547	SO241	8412.5	123	15	100
548	SO242	8397.5	253	15	100

549	SO243	8382.5	123	15	100
550	SO244	8367.5	253	15	100
551	SO245	8352.5	123	15	100
552	SO246	8337.5	253	15	100
553	SO247	8322.5	123	15	100
554	SO248	8307.5	253	15	100
555	SO249	8292.5	123	15	100
556	SO250	8277.5	253	15	100
557	SO251	8262.5	123	15	100
558	SO252	8247.5	253	15	100
559	SO253	8232.5	123	15	100
560	SO254	8217.5	253	15	100
561	SO255	8202.5	123	15	100
562	SO256	8187.5	253	15	100
563	SO257	8172.5	123	15	100
564	SO258	8157.5	253	15	100
565	SO259	8142.5	123	15	100
566	SO260	8127.5	253	15	100
567	SO261	8112.5	123	15	100
568	SO262	8097.5	253	15	100
569	SO263	8082.5	123	15	100
570	SO264	8067.5	253	15	100
571	SO265	8052.5	123	15	100
572	SO266	8037.5	253	15	100
573	SO267	8022.5	123	15	100
574	SO268	8007.5	253	15	100
575	SO269	7992.5	123	15	100
576	SO270	7977.5	253	15	100
577	SO271	7962.5	123	15	100
578	SO272	7947.5	253	15	100
579	SO273	7932.5	123	15	100
580	SO274	7917.5	253	15	100
581	SO275	7902.5	123	15	100
582	SO276	7887.5	253	15	100
583	SO277	7872.5	123	15	100
584	SO278	7857.5	253	15	100
585	SO279	7842.5	123	15	100
586	SO280	7827.5	253	15	100
587	SO281	7812.5	123	15	100
588	SO282	7797.5	253	15	100
589	SO283	7782.5	123	15	100
590	SO284	7767.5	253	15	100
591	SO285	7752.5	123	15	100
592	SO286	7737.5	253	15	100
593	SO287	7722.5	123	15	100
594	SO288	7707.5	253	15	100
595	SO289	7692.5	123	15	100
596	SO290	7677.5	253	15	100
597	SO291	7662.5	123	15	100
598	SO292	7647.5	253	15	100
599	SO293	7632.5	123	15	100
600	SO294	7617.5	253	15	100
601	SO295	7602.5	123	15	100
602	SO296	7587.5	253	15	100
603	SO297	7572.5	123	15	100
604	SO298	7557.5	253	15	100
605	SO299	7542.5	123	15	100
606	SO300	7527.5	253	15	100
607	SO301	7512.5	123	15	100
608	SO302	7497.5	253	15	100
609	SO303	7482.5	123	15	100

FITIPOWER CONFIDENTIAL

610	SO304	7467.5	253	15	100
611	SO305	7452.5	123	15	100
612	SO306	7437.5	253	15	100
613	SO307	7422.5	123	15	100
614	SO308	7407.5	253	15	100
615	SO309	7392.5	123	15	100
616	SO310	7377.5	253	15	100
617	SO311	7362.5	123	15	100
618	SO312	7347.5	253	15	100
619	SO313	7332.5	123	15	100
620	SO314	7317.5	253	15	100
621	SO315	7302.5	123	15	100
622	SO316	7287.5	253	15	100
623	SO317	7272.5	123	15	100
624	SO318	7257.5	253	15	100
625	SO319	7242.5	123	15	100
626	SO320	7227.5	253	15	100
627	SO321	7212.5	123	15	100
628	SO322	7197.5	253	15	100
629	SO323	7182.5	123	15	100
630	SO324	7167.5	253	15	100
631	SO325	7152.5	123	15	100
632	SO326	7137.5	253	15	100
633	SO327	7122.5	123	15	100
634	SO328	7107.5	253	15	100
635	SO329	7092.5	123	15	100
636	SO330	7077.5	253	15	100
637	SO331	7062.5	123	15	100
638	SO332	7047.5	253	15	100
639	SO333	7032.5	123	15	100
640	SO334	7017.5	253	15	100
641	SO335	7002.5	123	15	100
642	SO336	6987.5	253	15	100
643	SO337	6972.5	123	15	100
644	SO338	6957.5	253	15	100
645	SO339	6942.5	123	15	100
646	SO340	6927.5	253	15	100
647	SO341	6912.5	123	15	100
648	SO342	6897.5	253	15	100
649	SO343	6882.5	123	15	100
650	SO344	6867.5	253	15	100
651	SO345	6852.5	123	15	100
652	SO346	6837.5	253	15	100
653	SO347	6822.5	123	15	100
654	SO348	6807.5	253	15	100
655	SO349	6792.5	123	15	100
656	SO350	6777.5	253	15	100
657	SO351	6762.5	123	15	100
658	SO352	6747.5	253	15	100
659	SO353	6732.5	123	15	100
660	SO354	6717.5	253	15	100
661	SO355	6702.5	123	15	100
662	SO356	6687.5	253	15	100
663	SO357	6672.5	123	15	100
664	SO358	6657.5	253	15	100
665	SO359	6642.5	123	15	100
666	SO360	6627.5	253	15	100
667	SO361	6612.5	123	15	100
668	SO362	6597.5	253	15	100
669	SO363	6582.5	123	15	100
670	SO364	6567.5	253	15	100

671	SO365	6552.5	123	15	100
672	SO366	6537.5	253	15	100
673	SO367	6522.5	123	15	100
674	SO368	6507.5	253	15	100
675	SO369	6492.5	123	15	100
676	SO370	6477.5	253	15	100
677	SO371	6462.5	123	15	100
678	SO372	6447.5	253	15	100
679	SO373	6432.5	123	15	100
680	SO374	6417.5	253	15	100
681	SO375	6402.5	123	15	100
682	SO376	6387.5	253	15	100
683	SO377	6372.5	123	15	100
684	SO378	6357.5	253	15	100
685	SO379	6342.5	123	15	100
686	SO380	6327.5	253	15	100
687	SO381	6312.5	123	15	100
688	SO382	6297.5	253	15	100
689	SO383	6282.5	123	15	100
690	SO384	6267.5	253	15	100
691	SO385	6252.5	123	15	100
692	SO386	6237.5	253	15	100
693	SO387	6222.5	123	15	100
694	SO388	6207.5	253	15	100
695	SO389	6192.5	123	15	100
696	SO390	6177.5	253	15	100
697	SO391	6162.5	123	15	100
698	SO392	6147.5	253	15	100
699	SO393	6132.5	123	15	100
700	SO394	6117.5	253	15	100
701	SO395	6102.5	123	15	100
702	SO396	6087.5	253	15	100
703	SO397	6072.5	123	15	100
704	SO398	6057.5	253	15	100
705	SO399	6042.5	123	15	100
706	SO400	6027.5	253	15	100
707	SO401	6012.5	123	15	100
708	SO402	5997.5	253	15	100
709	SO403	5982.5	123	15	100
710	SO404	5967.5	253	15	100
711	SO405	5952.5	123	15	100
712	SO406	5937.5	253	15	100
713	SO407	5922.5	123	15	100
714	SO408	5907.5	253	15	100
715	SO409	5892.5	123	15	100
716	SO410	5877.5	253	15	100
717	SO411	5862.5	123	15	100
718	SO412	5847.5	253	15	100
719	SO413	5832.5	123	15	100
720	SO414	5817.5	253	15	100
721	SO415	5802.5	123	15	100
722	SO416	5787.5	253	15	100
723	SO417	5772.5	123	15	100
724	SO418	5757.5	253	15	100
725	SO419	5742.5	123	15	100
726	SO420	5727.5	253	15	100
727	SO421	5712.5	123	15	100
728	SO422	5697.5	253	15	100
729	SO423	5682.5	123	15	100
730	SO424	5667.5	253	15	100
731	SO425	5652.5	123	15	100

FITIPOWER CONFIDENTIAL

732	SO426	5637.5	253	15	100
733	SO427	5622.5	123	15	100
734	SO428	5607.5	253	15	100
735	SO429	5592.5	123	15	100
736	SO430	5577.5	253	15	100
737	SO431	5562.5	123	15	100
738	SO432	5547.5	253	15	100
739	SO433	5532.5	123	15	100
740	SO434	5517.5	253	15	100
741	SO435	5502.5	123	15	100
742	SO436	5487.5	253	15	100
743	SO437	5472.5	123	15	100
744	SO438	5457.5	253	15	100
745	SO439	5442.5	123	15	100
746	SO440	5427.5	253	15	100
747	SO441	5412.5	123	15	100
748	SO442	5397.5	253	15	100
749	SO443	5382.5	123	15	100
750	SO444	5367.5	253	15	100
751	SO445	5352.5	123	15	100
752	SO446	5337.5	253	15	100
753	SO447	5322.5	123	15	100
754	SO448	5307.5	253	15	100
755	SO449	5292.5	123	15	100
756	SO450	5277.5	253	15	100
757	SO451	5262.5	123	15	100
758	SO452	5247.5	253	15	100
759	SO453	5232.5	123	15	100
760	SO454	5217.5	253	15	100
761	SO455	5202.5	123	15	100
762	SO456	5187.5	253	15	100
763	SO457	5172.5	123	15	100
764	SO458	5157.5	253	15	100
765	SO459	5142.5	123	15	100
766	SO460	5127.5	253	15	100
767	SO461	5112.5	123	15	100
768	SO462	5097.5	253	15	100
769	SO463	5082.5	123	15	100
770	SO464	5067.5	253	15	100
771	SO465	5052.5	123	15	100
772	SO466	5037.5	253	15	100
773	SO467	5022.5	123	15	100
774	SO468	5007.5	253	15	100
775	SO469	4992.5	123	15	100
776	SO470	4977.5	253	15	100
777	SO471	4962.5	123	15	100
778	SO472	4947.5	253	15	100
779	SO473	4932.5	123	15	100
780	SO474	4917.5	253	15	100
781	SO475	4902.5	123	15	100
782	SO476	4887.5	253	15	100
783	SO477	4872.5	123	15	100
784	SO478	4857.5	253	15	100
785	SO479	4842.5	123	15	100
786	SO480	4827.5	253	15	100
787	SO481	4812.5	123	15	100
788	SO482	4797.5	253	15	100
789	SO483	4782.5	123	15	100
790	SO484	4767.5	253	15	100
791	SO485	4752.5	123	15	100
792	SO486	4737.5	253	15	100

793	SO487	4722.5	123	15	100
794	SO488	4707.5	253	15	100
795	SO489	4692.5	123	15	100
796	SO490	4677.5	253	15	100
797	SO491	4662.5	123	15	100
798	SO492	4647.5	253	15	100
799	SO493	4632.5	123	15	100
800	SO494	4617.5	253	15	100
801	SO495	4602.5	123	15	100
802	SO496	4587.5	253	15	100
803	SO497	4572.5	123	15	100
804	SO498	4557.5	253	15	100
805	SO499	4542.5	123	15	100
806	SO500	4527.5	253	15	100
807	SO501	4512.5	123	15	100
808	SO502	4497.5	253	15	100
809	SO503	4482.5	123	15	100
810	SO504	4467.5	253	15	100
811	SO505	4452.5	123	15	100
812	SO506	4437.5	253	15	100
813	SO507	4422.5	123	15	100
814	SO508	4407.5	253	15	100
815	SO509	4392.5	123	15	100
816	SO510	4377.5	253	15	100
817	SO511	4362.5	123	15	100
818	SO512	4347.5	253	15	100
819	SO513	4332.5	123	15	100
820	SO514	4317.5	253	15	100
821	SO515	4302.5	123	15	100
822	SO516	4287.5	253	15	100
823	SO517	4272.5	123	15	100
824	SO518	4257.5	253	15	100
825	SO519	4242.5	123	15	100
826	SO520	4227.5	253	15	100
827	SO521	4212.5	123	15	100
828	SO522	4197.5	253	15	100
829	SO523	4182.5	123	15	100
830	SO524	4167.5	253	15	100
831	SO525	4152.5	123	15	100
832	SO526	4137.5	253	15	100
833	SO527	4122.5	123	15	100
834	SO528	4107.5	253	15	100
835	SO529	4092.5	123	15	100
836	SO530	4077.5	253	15	100
837	SO531	4062.5	123	15	100
838	SO532	4047.5	253	15	100
839	SO533	4032.5	123	15	100
840	SO534	4017.5	253	15	100
841	SO535	4002.5	123	15	100
842	SO536	3987.5	253	15	100
843	SO537	3972.5	123	15	100
844	SO538	3957.5	253	15	100
845	SO539	3942.5	123	15	100
846	SO540	3927.5	253	15	100
847	SO541	3912.5	123	15	100
848	SO542	3897.5	253	15	100
849	SO543	3882.5	123	15	100
850	SO544	3867.5	253	15	100
851	SO545	3852.5	123	15	100
852	SO546	3837.5	253	15	100
853	SO547	3822.5	123	15	100

FITIPOWER CONFIDENTIAL

854	SO548	3807.5	253	15	100
855	SO549	3792.5	123	15	100
856	SO550	3777.5	253	15	100
857	SO551	3762.5	123	15	100
858	SO552	3747.5	253	15	100
859	SO553	3732.5	123	15	100
860	SO554	3717.5	253	15	100
861	SO555	3702.5	123	15	100
862	SO556	3687.5	253	15	100
863	SO557	3672.5	123	15	100
864	SO558	3657.5	253	15	100
865	SO559	3642.5	123	15	100
866	SO560	3627.5	253	15	100
867	SO561	3612.5	123	15	100
868	SO562	3597.5	253	15	100
869	SO563	3582.5	123	15	100
870	SO564	3567.5	253	15	100
871	SO565	3552.5	123	15	100
872	SO566	3537.5	253	15	100
873	SO567	3522.5	123	15	100
874	SO568	3507.5	253	15	100
875	SO569	3492.5	123	15	100
876	SO570	3477.5	253	15	100
877	SO571	3462.5	123	15	100
878	SO572	3447.5	253	15	100
879	SO573	3432.5	123	15	100
880	SO574	3417.5	253	15	100
881	SO575	3402.5	123	15	100
882	SO576	3387.5	253	15	100
883	SO577	3372.5	123	15	100
884	SO578	3357.5	253	15	100
885	SO579	3342.5	123	15	100
886	SO580	3327.5	253	15	100
887	SO581	3312.5	123	15	100
888	SO582	3297.5	253	15	100
889	SO583	3282.5	123	15	100
890	SO584	3267.5	253	15	100
891	SO585	3252.5	123	15	100
892	SO586	3237.5	253	15	100
893	SO587	3222.5	123	15	100
894	SO588	3207.5	253	15	100
895	SO589	3192.5	123	15	100
896	SO590	3177.5	253	15	100
897	SO591	3162.5	123	15	100
898	SO592	3147.5	253	15	100
899	SO593	3132.5	123	15	100
900	SO594	3117.5	253	15	100
901	SO595	3102.5	123	15	100
902	SO596	3087.5	253	15	100
903	SO597	3072.5	123	15	100
904	SO598	3057.5	253	15	100
905	SO599	3042.5	123	15	100
906	SO600	3027.5	253	15	100
907	SO601	3012.5	123	15	100
908	SO602	2997.5	253	15	100
909	SO603	2982.5	123	15	100
910	SO604	2967.5	253	15	100
911	SO605	2952.5	123	15	100
912	SO606	2937.5	253	15	100
913	SO607	2922.5	123	15	100
914	SO608	2907.5	253	15	100

915	SO609	2892.5	123	15	100
916	SO610	2877.5	253	15	100
917	SO611	2862.5	123	15	100
918	SO612	2847.5	253	15	100
919	SO613	2832.5	123	15	100
920	SO614	2817.5	253	15	100
921	SO615	2802.5	123	15	100
922	SO616	2787.5	253	15	100
923	SO617	2772.5	123	15	100
924	SO618	2757.5	253	15	100
925	SO619	2742.5	123	15	100
926	SO620	2727.5	253	15	100
927	SO621	2712.5	123	15	100
928	SO622	2697.5	253	15	100
929	SO623	2682.5	123	15	100
930	SO624	2667.5	253	15	100
931	SO625	2652.5	123	15	100
932	SO626	2637.5	253	15	100
933	SO627	2622.5	123	15	100
934	SO628	2607.5	253	15	100
935	SO629	2592.5	123	15	100
936	SO630	2577.5	253	15	100
937	SO631	2562.5	123	15	100
938	SO632	2547.5	253	15	100
939	SO633	2532.5	123	15	100
940	SO634	2517.5	253	15	100
941	SO635	2502.5	123	15	100
942	SO636	2487.5	253	15	100
943	SO637	2472.5	123	15	100
944	SO638	2457.5	253	15	100
945	SO639	2442.5	123	15	100
946	SO640	2427.5	253	15	100
947	SO641	2412.5	123	15	100
948	SO642	2397.5	253	15	100
949	SO643	2382.5	123	15	100
950	SO644	2367.5	253	15	100
951	SO645	2352.5	123	15	100
952	SO646	2337.5	253	15	100
953	SO647	2322.5	123	15	100
954	SO648	2307.5	253	15	100
955	SO649	2292.5	123	15	100
956	SO650	2277.5	253	15	100
957	SO651	2262.5	123	15	100
958	SO652	2247.5	253	15	100
959	SO653	2232.5	123	15	100
960	SO654	2217.5	253	15	100
961	SO655	2202.5	123	15	100
962	SO656	2187.5	253	15	100
963	SO657	2172.5	123	15	100
964	SO658	2157.5	253	15	100
965	SO659	2142.5	123	15	100
966	SO660	2127.5	253	15	100
967	SO661	2112.5	123	15	100
968	SO662	2097.5	253	15	100
969	SO663	2082.5	123	15	100
970	SO664	2067.5	253	15	100
971	SO665	2052.5	123	15	100
972	SO666	2037.5	253	15	100
973	SO667	2022.5	123	15	100
974	SO668	2007.5	253	15	100
975	SO669	1992.5	123	15	100

FITIPOWER CONFIDENTIAL

976	SO670	1977.5	253	15	100
977	SO671	1962.5	123	15	100
978	SO672	1947.5	253	15	100
979	SO673	1932.5	123	15	100
980	SO674	1917.5	253	15	100
981	SO675	1902.5	123	15	100
982	SO676	1887.5	253	15	100
983	SO677	1872.5	123	15	100
984	SO678	1857.5	253	15	100
985	SO679	1842.5	123	15	100
986	SO680	1827.5	253	15	100
987	SO681	1812.5	123	15	100
988	SO682	1797.5	253	15	100
989	SO683	1782.5	123	15	100
990	SO684	1767.5	253	15	100
991	SO685	1752.5	123	15	100
992	SO686	1737.5	253	15	100
993	SO687	1722.5	123	15	100
994	SO688	1707.5	253	15	100
995	SO689	1692.5	123	15	100
996	SO690	1677.5	253	15	100
997	SO691	1662.5	123	15	100
998	SO692	1647.5	253	15	100
999	SO693	1632.5	123	15	100
1000	SO694	1617.5	253	15	100
1001	SO695	1602.5	123	15	100
1002	SO696	1587.5	253	15	100
1003	SO697	1572.5	123	15	100
1004	SO698	1557.5	253	15	100
1005	SO699	1542.5	123	15	100
1006	SO700	1527.5	253	15	100
1007	SO701	1512.5	123	15	100
1008	SO702	1497.5	253	15	100
1009	SO703	1482.5	123	15	100
1010	SO704	1467.5	253	15	100
1011	SO705	1452.5	123	15	100
1012	SO706	1437.5	253	15	100
1013	SO707	1422.5	123	15	100
1014	SO708	1407.5	253	15	100
1015	SO709	1392.5	123	15	100
1016	SO710	1377.5	253	15	100
1017	SO711	1362.5	123	15	100
1018	SO712	1347.5	253	15	100
1019	SO713	1332.5	123	15	100
1020	SO714	1317.5	253	15	100
1021	SO715	1302.5	123	15	100
1022	SO716	1287.5	253	15	100
1023	SO717	1272.5	123	15	100
1024	SO718	1257.5	253	15	100
1025	SO719	1242.5	123	15	100
1026	SO720	1227.5	253	15	100
1027	SO721	1212.5	123	15	100
1028	SO722	1197.5	253	15	100
1029	SO723	1182.5	123	15	100
1030	SO724	1167.5	253	15	100
1031	SO725	1152.5	123	15	100
1032	SO726	1137.5	253	15	100
1033	SO727	1122.5	123	15	100
1034	SO728	1107.5	253	15	100
1035	SO729	1092.5	123	15	100
1036	SO730	1077.5	253	15	100

1037	SO731	1062.5	123	15	100
1038	SO732	1047.5	253	15	100
1039	SO733	1032.5	123	15	100
1040	SO734	1017.5	253	15	100
1041	SO735	1002.5	123	15	100
1042	SO736	987.5	253	15	100
1043	SO737	972.5	123	15	100
1044	SO738	957.5	253	15	100
1045	SO739	942.5	123	15	100
1046	SO740	927.5	253	15	100
1047	SO741	912.5	123	15	100
1048	SO742	897.5	253	15	100
1049	SO743	882.5	123	15	100
1050	SO744	867.5	253	15	100
1051	SO745	852.5	123	15	100
1052	SO746	837.5	253	15	100
1053	SO747	822.5	123	15	100
1054	SO748	807.5	253	15	100
1055	SO749	792.5	123	15	100
1056	SO750	777.5	253	15	100
1057	SO751	762.5	123	15	100
1058	SO752	747.5	253	15	100
1059	SO753	732.5	123	15	100
1060	SO754	717.5	253	15	100
1061	SO755	702.5	123	15	100
1062	SO756	687.5	253	15	100
1063	SO757	672.5	123	15	100
1064	SO758	657.5	253	15	100
1065	SO759	642.5	123	15	100
1066	SO760	627.5	253	15	100
1067	SO761	612.5	123	15	100
1068	SO762	597.5	253	15	100
1069	SO763	582.5	123	15	100
1070	SO764	567.5	253	15	100
1071	SO765	552.5	123	15	100
1072	SO766	537.5	253	15	100
1073	SO767	522.5	123	15	100
1074	SO768	507.5	253	15	100
1075	SHIELDING	455	268	30	70
1076	SHIELDING	405	268	30	70
1077	SHIELDING	355	268	30	70
1078	SHIELDING	50	268	30	70
1079	SHIELDING	0	268	30	70
1080	SHIELDING	-50	268	30	70
1081	SHIELDING	-355	268	30	70
1082	SHIELDING	-405	268	30	70
1083	SHIELDING	-455	268	30	70
1084	SO769	-507.5	253	15	100
1085	SO770	-522.5	123	15	100
1086	SO771	-537.5	253	15	100
1087	SO772	-552.5	123	15	100
1088	SO773	-567.5	253	15	100
1089	SO774	-582.5	123	15	100
1090	SO775	-597.5	253	15	100
1091	SO776	-612.5	123	15	100
1092	SO777	-627.5	253	15	100
1093	SO778	-642.5	123	15	100
1094	SO779	-657.5	253	15	100
1095	SO780	-672.5	123	15	100
1096	SO781	-687.5	253	15	100
1097	SO782	-702.5	123	15	100

FITIPOWER CONFIDENTIAL

1098	SO783	-717.5	253	15	100
1099	SO784	-732.5	123	15	100
1100	SO785	-747.5	253	15	100
1101	SO786	-762.5	123	15	100
1102	SO787	-777.5	253	15	100
1103	SO788	-792.5	123	15	100
1104	SO789	-807.5	253	15	100
1105	SO790	-822.5	123	15	100
1106	SO791	-837.5	253	15	100
1107	SO792	-852.5	123	15	100
1108	SO793	-867.5	253	15	100
1109	SO794	-882.5	123	15	100
1110	SO795	-897.5	253	15	100
1111	SO796	-912.5	123	15	100
1112	SO797	-927.5	253	15	100
1113	SO798	-942.5	123	15	100
1114	SO799	-957.5	253	15	100
1115	SO800	-972.5	123	15	100
1116	SO801	-987.5	253	15	100
1117	SO802	-1002.5	123	15	100
1118	SO803	-1017.5	253	15	100
1119	SO804	-1032.5	123	15	100
1120	SO805	-1047.5	253	15	100
1121	SO806	-1062.5	123	15	100
1122	SO807	-1077.5	253	15	100
1123	SO808	-1092.5	123	15	100
1124	SO809	-1107.5	253	15	100
1125	SO810	-1122.5	123	15	100
1126	SO811	-1137.5	253	15	100
1127	SO812	-1152.5	123	15	100
1128	SO813	-1167.5	253	15	100
1129	SO814	-1182.5	123	15	100
1130	SO815	-1197.5	253	15	100
1131	SO816	-1212.5	123	15	100
1132	SO817	-1227.5	253	15	100
1133	SO818	-1242.5	123	15	100
1134	SO819	-1257.5	253	15	100
1135	SO820	-1272.5	123	15	100
1136	SO821	-1287.5	253	15	100
1137	SO822	-1302.5	123	15	100
1138	SO823	-1317.5	253	15	100
1139	SO824	-1332.5	123	15	100
1140	SO825	-1347.5	253	15	100
1141	SO826	-1362.5	123	15	100
1142	SO827	-1377.5	253	15	100
1143	SO828	-1392.5	123	15	100
1144	SO829	-1407.5	253	15	100
1145	SO830	-1422.5	123	15	100
1146	SO831	-1437.5	253	15	100
1147	SO832	-1452.5	123	15	100
1148	SO833	-1467.5	253	15	100
1149	SO834	-1482.5	123	15	100
1150	SO835	-1497.5	253	15	100
1151	SO836	-1512.5	123	15	100
1152	SO837	-1527.5	253	15	100
1153	SO838	-1542.5	123	15	100
1154	SO839	-1557.5	253	15	100
1155	SO840	-1572.5	123	15	100
1156	SO841	-1587.5	253	15	100
1157	SO842	-1602.5	123	15	100
1158	SO843	-1617.5	253	15	100

1159	SO844	-1632.5	123	15	100
1160	SO845	-1647.5	253	15	100
1161	SO846	-1662.5	123	15	100
1162	SO847	-1677.5	253	15	100
1163	SO848	-1692.5	123	15	100
1164	SO849	-1707.5	253	15	100
1165	SO850	-1722.5	123	15	100
1166	SO851	-1737.5	253	15	100
1167	SO852	-1752.5	123	15	100
1168	SO853	-1767.5	253	15	100
1169	SO854	-1782.5	123	15	100
1170	SO855	-1797.5	253	15	100
1171	SO856	-1812.5	123	15	100
1172	SO857	-1827.5	253	15	100
1173	SO858	-1842.5	123	15	100
1174	SO859	-1857.5	253	15	100
1175	SO860	-1872.5	123	15	100
1176	SO861	-1887.5	253	15	100
1177	SO862	-1902.5	123	15	100
1178	SO863	-1917.5	253	15	100
1179	SO864	-1932.5	123	15	100
1180	SO865	-1947.5	253	15	100
1181	SO866	-1962.5	123	15	100
1182	SO867	-1977.5	253	15	100
1183	SO868	-1992.5	123	15	100
1184	SO869	-2007.5	253	15	100
1185	SO870	-2022.5	123	15	100
1186	SO871	-2037.5	253	15	100
1187	SO872	-2052.5	123	15	100
1188	SO873	-2067.5	253	15	100
1189	SO874	-2082.5	123	15	100
1190	SO875	-2097.5	253	15	100
1191	SO876	-2112.5	123	15	100
1192	SO877	-2127.5	253	15	100
1193	SO878	-2142.5	123	15	100
1194	SO879	-2157.5	253	15	100
1195	SO880	-2172.5	123	15	100
1196	SO881	-2187.5	253	15	100
1197	SO882	-2202.5	123	15	100
1198	SO883	-2217.5	253	15	100
1199	SO884	-2232.5	123	15	100
1200	SO885	-2247.5	253	15	100
1201	SO886	-2262.5	123	15	100
1202	SO887	-2277.5	253	15	100
1203	SO888	-2292.5	123	15	100
1204	SO889	-2307.5	253	15	100
1205	SO890	-2322.5	123	15	100
1206	SO891	-2337.5	253	15	100
1207	SO892	-2352.5	123	15	100
1208	SO893	-2367.5	253	15	100
1209	SO894	-2382.5	123	15	100
1210	SO895	-2397.5	253	15	100
1211	SO896	-2412.5	123	15	100
1212	SO897	-2427.5	253	15	100
1213	SO898	-2442.5	123	15	100
1214	SO899	-2457.5	253	15	100
1215	SO900	-2472.5	123	15	100
1216	SO901	-2487.5	253	15	100
1217	SO902	-2502.5	123	15	100
1218	SO903	-2517.5	253	15	100
1219	SO904	-2532.5	123	15	100

FITIPOWER CONFIDENTIAL

1220	SO905	-2547.5	253	15	100
1221	SO906	-2562.5	123	15	100
1222	SO907	-2577.5	253	15	100
1223	SO908	-2592.5	123	15	100
1224	SO909	-2607.5	253	15	100
1225	SO910	-2622.5	123	15	100
1226	SO911	-2637.5	253	15	100
1227	SO912	-2652.5	123	15	100
1228	SO913	-2667.5	253	15	100
1229	SO914	-2682.5	123	15	100
1230	SO915	-2697.5	253	15	100
1231	SO916	-2712.5	123	15	100
1232	SO917	-2727.5	253	15	100
1233	SO918	-2742.5	123	15	100
1234	SO919	-2757.5	253	15	100
1235	SO920	-2772.5	123	15	100
1236	SO921	-2787.5	253	15	100
1237	SO922	-2802.5	123	15	100
1238	SO923	-2817.5	253	15	100
1239	SO924	-2832.5	123	15	100
1240	SO925	-2847.5	253	15	100
1241	SO926	-2862.5	123	15	100
1242	SO927	-2877.5	253	15	100
1243	SO928	-2892.5	123	15	100
1244	SO929	-2907.5	253	15	100
1245	SO930	-2922.5	123	15	100
1246	SO931	-2937.5	253	15	100
1247	SO932	-2952.5	123	15	100
1248	SO933	-2967.5	253	15	100
1249	SO934	-2982.5	123	15	100
1250	SO935	-2997.5	253	15	100
1251	SO936	-3012.5	123	15	100
1252	SO937	-3027.5	253	15	100
1253	SO938	-3042.5	123	15	100
1254	SO939	-3057.5	253	15	100
1255	SO940	-3072.5	123	15	100
1256	SO941	-3087.5	253	15	100
1257	SO942	-3102.5	123	15	100
1258	SO943	-3117.5	253	15	100
1259	SO944	-3132.5	123	15	100
1260	SO945	-3147.5	253	15	100
1261	SO946	-3162.5	123	15	100
1262	SO947	-3177.5	253	15	100
1263	SO948	-3192.5	123	15	100
1264	SO949	-3207.5	253	15	100
1265	SO950	-3222.5	123	15	100
1266	SO951	-3237.5	253	15	100
1267	SO952	-3252.5	123	15	100
1268	SO953	-3267.5	253	15	100
1269	SO954	-3282.5	123	15	100
1270	SO955	-3297.5	253	15	100
1271	SO956	-3312.5	123	15	100
1272	SO957	-3327.5	253	15	100
1273	SO958	-3342.5	123	15	100
1274	SO959	-3357.5	253	15	100
1275	SO960	-3372.5	123	15	100
1276	SO961	-3387.5	253	15	100
1277	SO962	-3402.5	123	15	100
1278	SO963	-3417.5	253	15	100
1279	SO964	-3432.5	123	15	100
1280	SO965	-3447.5	253	15	100

1281	SO966	-3462.5	123	15	100
1282	SO967	-3477.5	253	15	100
1283	SO968	-3492.5	123	15	100
1284	SO969	-3507.5	253	15	100
1285	SO970	-3522.5	123	15	100
1286	SO971	-3537.5	253	15	100
1287	SO972	-3552.5	123	15	100
1288	SO973	-3567.5	253	15	100
1289	SO974	-3582.5	123	15	100
1290	SO975	-3597.5	253	15	100
1291	SO976	-3612.5	123	15	100
1292	SO977	-3627.5	253	15	100
1293	SO978	-3642.5	123	15	100
1294	SO979	-3657.5	253	15	100
1295	SO980	-3672.5	123	15	100
1296	SO981	-3687.5	253	15	100
1297	SO982	-3702.5	123	15	100
1298	SO983	-3717.5	253	15	100
1299	SO984	-3732.5	123	15	100
1300	SO985	-3747.5	253	15	100
1301	SO986	-3762.5	123	15	100
1302	SO987	-3777.5	253	15	100
1303	SO988	-3792.5	123	15	100
1304	SO989	-3807.5	253	15	100
1305	SO990	-3822.5	123	15	100
1306	SO991	-3837.5	253	15	100
1307	SO992	-3852.5	123	15	100
1308	SO993	-3867.5	253	15	100
1309	SO994	-3882.5	123	15	100
1310	SO995	-3897.5	253	15	100
1311	SO996	-3912.5	123	15	100
1312	SO997	-3927.5	253	15	100
1313	SO998	-3942.5	123	15	100
1314	SO999	-3957.5	253	15	100
1315	SO1000	-3972.5	123	15	100
1316	SO1001	-3987.5	253	15	100
1317	SO1002	-4002.5	123	15	100
1318	SO1003	-4017.5	253	15	100
1319	SO1004	-4032.5	123	15	100
1320	SO1005	-4047.5	253	15	100
1321	SO1006	-4062.5	123	15	100
1322	SO1007	-4077.5	253	15	100
1323	SO1008	-4092.5	123	15	100
1324	SO1009	-4107.5	253	15	100
1325	SO1010	-4122.5	123	15	100
1326	SO1011	-4137.5	253	15	100
1327	SO1012	-4152.5	123	15	100
1328	SO1013	-4167.5	253	15	100
1329	SO1014	-4182.5	123	15	100
1330	SO1015	-4197.5	253	15	100
1331	SO1016	-4212.5	123	15	100
1332	SO1017	-4227.5	253	15	100
1333	SO1018	-4242.5	123	15	100
1334	SO1019	-4257.5	253	15	100
1335	SO1020	-4272.5	123	15	100
1336	SO1021	-4287.5	253	15	100
1337	SO1022	-4302.5	123	15	100
1338	SO1023	-4317.5	253	15	100
1339	SO1024	-4332.5	123	15	100
1340	SO1025	-4347.5	253	15	100
1341	SO1026	-4362.5	123	15	100

FITIPOWER CONFIDENTIAL

1342	SO1027	-4377.5	253	15	100
1343	SO1028	-4392.5	123	15	100
1344	SO1029	-4407.5	253	15	100
1345	SO1030	-4422.5	123	15	100
1346	SO1031	-4437.5	253	15	100
1347	SO1032	-4452.5	123	15	100
1348	SO1033	-4467.5	253	15	100
1349	SO1034	-4482.5	123	15	100
1350	SO1035	-4497.5	253	15	100
1351	SO1036	-4512.5	123	15	100
1352	SO1037	-4527.5	253	15	100
1353	SO1038	-4542.5	123	15	100
1354	SO1039	-4557.5	253	15	100
1355	SO1040	-4572.5	123	15	100
1356	SO1041	-4587.5	253	15	100
1357	SO1042	-4602.5	123	15	100
1358	SO1043	-4617.5	253	15	100
1359	SO1044	-4632.5	123	15	100
1360	SO1045	-4647.5	253	15	100
1361	SO1046	-4662.5	123	15	100
1362	SO1047	-4677.5	253	15	100
1363	SO1048	-4692.5	123	15	100
1364	SO1049	-4707.5	253	15	100
1365	SO1050	-4722.5	123	15	100
1366	SO1051	-4737.5	253	15	100
1367	SO1052	-4752.5	123	15	100
1368	SO1053	-4767.5	253	15	100
1369	SO1054	-4782.5	123	15	100
1370	SO1055	-4797.5	253	15	100
1371	SO1056	-4812.5	123	15	100
1372	SO1057	-4827.5	253	15	100
1373	SO1058	-4842.5	123	15	100
1374	SO1059	-4857.5	253	15	100
1375	SO1060	-4872.5	123	15	100
1376	SO1061	-4887.5	253	15	100
1377	SO1062	-4902.5	123	15	100
1378	SO1063	-4917.5	253	15	100
1379	SO1064	-4932.5	123	15	100
1380	SO1065	-4947.5	253	15	100
1381	SO1066	-4962.5	123	15	100
1382	SO1067	-4977.5	253	15	100
1383	SO1068	-4992.5	123	15	100
1384	SO1069	-5007.5	253	15	100
1385	SO1070	-5022.5	123	15	100
1386	SO1071	-5037.5	253	15	100
1387	SO1072	-5052.5	123	15	100
1388	SO1073	-5067.5	253	15	100
1389	SO1074	-5082.5	123	15	100
1390	SO1075	-5097.5	253	15	100
1391	SO1076	-5112.5	123	15	100
1392	SO1077	-5127.5	253	15	100
1393	SO1078	-5142.5	123	15	100
1394	SO1079	-5157.5	253	15	100
1395	SO1080	-5172.5	123	15	100
1396	SO1081	-5187.5	253	15	100
1397	SO1082	-5202.5	123	15	100
1398	SO1083	-5217.5	253	15	100
1399	SO1084	-5232.5	123	15	100
1400	SO1085	-5247.5	253	15	100
1401	SO1086	-5262.5	123	15	100
1402	SO1087	-5277.5	253	15	100

1403	SO1088	-5292.5	123	15	100
1404	SO1089	-5307.5	253	15	100
1405	SO1090	-5322.5	123	15	100
1406	SO1091	-5337.5	253	15	100
1407	SO1092	-5352.5	123	15	100
1408	SO1093	-5367.5	253	15	100
1409	SO1094	-5382.5	123	15	100
1410	SO1095	-5397.5	253	15	100
1411	SO1096	-5412.5	123	15	100
1412	SO1097	-5427.5	253	15	100
1413	SO1098	-5442.5	123	15	100
1414	SO1099	-5457.5	253	15	100
1415	SO1100	-5472.5	123	15	100
1416	SO1101	-5487.5	253	15	100
1417	SO1102	-5502.5	123	15	100
1418	SO1103	-5517.5	253	15	100
1419	SO1104	-5532.5	123	15	100
1420	SO1105	-5547.5	253	15	100
1421	SO1106	-5562.5	123	15	100
1422	SO1107	-5577.5	253	15	100
1423	SO1108	-5592.5	123	15	100
1424	SO1109	-5607.5	253	15	100
1425	SO1110	-5622.5	123	15	100
1426	SO1111	-5637.5	253	15	100
1427	SO1112	-5652.5	123	15	100
1428	SO1113	-5667.5	253	15	100
1429	SO1114	-5682.5	123	15	100
1430	SO1115	-5697.5	253	15	100
1431	SO1116	-5712.5	123	15	100
1432	SO1117	-5727.5	253	15	100
1433	SO1118	-5742.5	123	15	100
1434	SO1119	-5757.5	253	15	100
1435	SO1120	-5772.5	123	15	100
1436	SO1121	-5787.5	253	15	100
1437	SO1122	-5802.5	123	15	100
1438	SO1123	-5817.5	253	15	100
1439	SO1124	-5832.5	123	15	100
1440	SO1125	-5847.5	253	15	100
1441	SO1126	-5862.5	123	15	100
1442	SO1127	-5877.5	253	15	100
1443	SO1128	-5892.5	123	15	100
1444	SO1129	-5907.5	253	15	100
1445	SO1130	-5922.5	123	15	100
1446	SO1131	-5937.5	253	15	100
1447	SO1132	-5952.5	123	15	100
1448	SO1133	-5967.5	253	15	100
1449	SO1134	-5982.5	123	15	100
1450	SO1135	-5997.5	253	15	100
1451	SO1136	-6012.5	123	15	100
1452	SO1137	-6027.5	253	15	100
1453	SO1138	-6042.5	123	15	100
1454	SO1139	-6057.5	253	15	100
1455	SO1140	-6072.5	123	15	100
1456	SO1141	-6087.5	253	15	100
1457	SO1142	-6102.5	123	15	100
1458	SO1143	-6117.5	253	15	100
1459	SO1144	-6132.5	123	15	100
1460	SO1145	-6147.5	253	15	100
1461	SO1146	-6162.5	123	15	100
1462	SO1147	-6177.5	253	15	100
1463	SO1148	-6192.5	123	15	100

FITIPOWER CONFIDENTIAL

1464	SO1149	-6207.5	253	15	100
1465	SO1150	-6222.5	123	15	100
1466	SO1151	-6237.5	253	15	100
1467	SO1152	-6252.5	123	15	100
1468	SO1153	-6267.5	253	15	100
1469	SO1154	-6282.5	123	15	100
1470	SO1155	-6297.5	253	15	100
1471	SO1156	-6312.5	123	15	100
1472	SO1157	-6327.5	253	15	100
1473	SO1158	-6342.5	123	15	100
1474	SO1159	-6357.5	253	15	100
1475	SO1160	-6372.5	123	15	100
1476	SO1161	-6387.5	253	15	100
1477	SO1162	-6402.5	123	15	100
1478	SO1163	-6417.5	253	15	100
1479	SO1164	-6432.5	123	15	100
1480	SO1165	-6447.5	253	15	100
1481	SO1166	-6462.5	123	15	100
1482	SO1167	-6477.5	253	15	100
1483	SO1168	-6492.5	123	15	100
1484	SO1169	-6507.5	253	15	100
1485	SO1170	-6522.5	123	15	100
1486	SO1171	-6537.5	253	15	100
1487	SO1172	-6552.5	123	15	100
1488	SO1173	-6567.5	253	15	100
1489	SO1174	-6582.5	123	15	100
1490	SO1175	-6597.5	253	15	100
1491	SO1176	-6612.5	123	15	100
1492	SO1177	-6627.5	253	15	100
1493	SO1178	-6642.5	123	15	100
1494	SO1179	-6657.5	253	15	100
1495	SO1180	-6672.5	123	15	100
1496	SO1181	-6687.5	253	15	100
1497	SO1182	-6702.5	123	15	100
1498	SO1183	-6717.5	253	15	100
1499	SO1184	-6732.5	123	15	100
1500	SO1185	-6747.5	253	15	100
1501	SO1186	-6762.5	123	15	100
1502	SO1187	-6777.5	253	15	100
1503	SO1188	-6792.5	123	15	100
1504	SO1189	-6807.5	253	15	100
1505	SO1190	-6822.5	123	15	100
1506	SO1191	-6837.5	253	15	100
1507	SO1192	-6852.5	123	15	100
1508	SO1193	-6867.5	253	15	100
1509	SO1194	-6882.5	123	15	100
1510	SO1195	-6897.5	253	15	100
1511	SO1196	-6912.5	123	15	100
1512	SO1197	-6927.5	253	15	100
1513	SO1198	-6942.5	123	15	100
1514	SO1199	-6957.5	253	15	100
1515	SO1200	-6972.5	123	15	100
1516	SO1201	-6987.5	253	15	100
1517	SO1202	-7002.5	123	15	100
1518	SO1203	-7017.5	253	15	100
1519	SO1204	-7032.5	123	15	100
1520	SO1205	-7047.5	253	15	100
1521	SO1206	-7062.5	123	15	100
1522	SO1207	-7077.5	253	15	100
1523	SO1208	-7092.5	123	15	100
1524	SO1209	-7107.5	253	15	100

1525	SO1210	-7122.5	123	15	100
1526	SO1211	-7137.5	253	15	100
1527	SO1212	-7152.5	123	15	100
1528	SO1213	-7167.5	253	15	100
1529	SO1214	-7182.5	123	15	100
1530	SO1215	-7197.5	253	15	100
1531	SO1216	-7212.5	123	15	100
1532	SO1217	-7227.5	253	15	100
1533	SO1218	-7242.5	123	15	100
1534	SO1219	-7257.5	253	15	100
1535	SO1220	-7272.5	123	15	100
1536	SO1221	-7287.5	253	15	100
1537	SO1222	-7302.5	123	15	100
1538	SO1223	-7317.5	253	15	100
1539	SO1224	-7332.5	123	15	100
1540	SO1225	-7347.5	253	15	100
1541	SO1226	-7362.5	123	15	100
1542	SO1227	-7377.5	253	15	100
1543	SO1228	-7392.5	123	15	100
1544	SO1229	-7407.5	253	15	100
1545	SO1230	-7422.5	123	15	100
1546	SO1231	-7437.5	253	15	100
1547	SO1232	-7452.5	123	15	100
1548	SO1233	-7467.5	253	15	100
1549	SO1234	-7482.5	123	15	100
1550	SO1235	-7497.5	253	15	100
1551	SO1236	-7512.5	123	15	100
1552	SO1237	-7527.5	253	15	100
1553	SO1238	-7542.5	123	15	100
1554	SO1239	-7557.5	253	15	100
1555	SO1240	-7572.5	123	15	100
1556	SO1241	-7587.5	253	15	100
1557	SO1242	-7602.5	123	15	100
1558	SO1243	-7617.5	253	15	100
1559	SO1244	-7632.5	123	15	100
1560	SO1245	-7647.5	253	15	100
1561	SO1246	-7662.5	123	15	100
1562	SO1247	-7677.5	253	15	100
1563	SO1248	-7692.5	123	15	100
1564	SO1249	-7707.5	253	15	100
1565	SO1250	-7722.5	123	15	100
1566	SO1251	-7737.5	253	15	100
1567	SO1252	-7752.5	123	15	100
1568	SO1253	-7767.5	253	15	100
1569	SO1254	-7782.5	123	15	100
1570	SO1255	-7797.5	253	15	100
1571	SO1256	-7812.5	123	15	100
1572	SO1257	-7827.5	253	15	100
1573	SO1258	-7842.5	123	15	100
1574	SO1259	-7857.5	253	15	100
1575	SO1260	-7872.5	123	15	100
1576	SO1261	-7887.5	253	15	100
1577	SO1262	-7902.5	123	15	100
1578	SO1263	-7917.5	253	15	100
1579	SO1264	-7932.5	123	15	100
1580	SO1265	-7947.5	253	15	100
1581	SO1266	-7962.5	123	15	100
1582	SO1267	-7977.5	253	15	100
1583	SO1268	-7992.5	123	15	100
1584	SO1269	-8007.5	253	15	100
1585	SO1270	-8022.5	123	15	100

FITIPOWER CONFIDENTIAL

1586	SO1271	-8037.5	253	15	100
1587	SO1272	-8052.5	123	15	100
1588	SO1273	-8067.5	253	15	100
1589	SO1274	-8082.5	123	15	100
1590	SO1275	-8097.5	253	15	100
1591	SO1276	-8112.5	123	15	100
1592	SO1277	-8127.5	253	15	100
1593	SO1278	-8142.5	123	15	100
1594	SO1279	-8157.5	253	15	100
1595	SO1280	-8172.5	123	15	100
1596	SO1281	-8187.5	253	15	100
1597	SO1282	-8202.5	123	15	100
1598	SO1283	-8217.5	253	15	100
1599	SO1284	-8232.5	123	15	100
1600	SO1285	-8247.5	253	15	100
1601	SO1286	-8262.5	123	15	100
1602	SO1287	-8277.5	253	15	100
1603	SO1288	-8292.5	123	15	100
1604	SO1289	-8307.5	253	15	100
1605	SO1290	-8322.5	123	15	100
1606	SO1291	-8337.5	253	15	100
1607	SO1292	-8352.5	123	15	100
1608	SO1293	-8367.5	253	15	100
1609	SO1294	-8382.5	123	15	100
1610	SO1295	-8397.5	253	15	100
1611	SO1296	-8412.5	123	15	100
1612	SO1297	-8427.5	253	15	100
1613	SO1298	-8442.5	123	15	100
1614	SO1299	-8457.5	253	15	100
1615	SO1300	-8472.5	123	15	100
1616	SO1301	-8487.5	253	15	100
1617	SO1302	-8502.5	123	15	100
1618	SO1303	-8517.5	253	15	100
1619	SO1304	-8532.5	123	15	100
1620	SO1305	-8547.5	253	15	100
1621	SO1306	-8562.5	123	15	100
1622	SO1307	-8577.5	253	15	100
1623	SO1308	-8592.5	123	15	100
1624	SO1309	-8607.5	253	15	100
1625	SO1310	-8622.5	123	15	100
1626	SO1311	-8637.5	253	15	100
1627	SO1312	-8652.5	123	15	100
1628	SO1313	-8667.5	253	15	100
1629	SO1314	-8682.5	123	15	100
1630	SO1315	-8697.5	253	15	100
1631	SO1316	-8712.5	123	15	100
1632	SO1317	-8727.5	253	15	100
1633	SO1318	-8742.5	123	15	100
1634	SO1319	-8757.5	253	15	100
1635	SO1320	-8772.5	123	15	100
1636	SO1321	-8787.5	253	15	100
1637	SO1322	-8802.5	123	15	100
1638	SO1323	-8817.5	253	15	100
1639	SO1324	-8832.5	123	15	100
1640	SO1325	-8847.5	253	15	100
1641	SO1326	-8862.5	123	15	100
1642	SO1327	-8877.5	253	15	100
1643	SO1328	-8892.5	123	15	100
1644	SO1329	-8907.5	253	15	100
1645	SO1330	-8922.5	123	15	100
1646	SO1331	-8937.5	253	15	100

1647	SO1332	-8952.5	123	15	100
1648	SO1333	-8967.5	253	15	100
1649	SO1334	-8982.5	123	15	100
1650	SO1335	-8997.5	253	15	100
1651	SO1336	-9012.5	123	15	100
1652	SO1337	-9027.5	253	15	100
1653	SO1338	-9042.5	123	15	100
1654	SO1339	-9057.5	253	15	100
1655	SO1340	-9072.5	123	15	100
1656	SO1341	-9087.5	253	15	100
1657	SO1342	-9102.5	123	15	100
1658	SO1343	-9117.5	253	15	100
1659	SO1344	-9132.5	123	15	100
1660	SO1345	-9147.5	253	15	100
1661	SO1346	-9162.5	123	15	100
1662	SO1347	-9177.5	253	15	100
1663	SO1348	-9192.5	123	15	100
1664	SO1349	-9207.5	253	15	100
1665	SO1350	-9222.5	123	15	100
1666	SO1351	-9237.5	253	15	100
1667	SO1352	-9252.5	123	15	100
1668	SO1353	-9267.5	253	15	100
1669	SO1354	-9282.5	123	15	100
1670	SO1355	-9297.5	253	15	100
1671	SO1356	-9312.5	123	15	100
1672	SO1357	-9327.5	253	15	100
1673	SO1358	-9342.5	123	15	100
1674	SO1359	-9357.5	253	15	100
1675	SO1360	-9372.5	123	15	100
1676	SO1361	-9387.5	253	15	100
1677	SO1362	-9402.5	123	15	100
1678	SO1363	-9417.5	253	15	100
1679	SO1364	-9432.5	123	15	100
1680	SO1365	-9447.5	253	15	100
1681	SO1366	-9462.5	123	15	100
1682	SO1367	-9477.5	253	15	100
1683	SO1368	-9492.5	123	15	100
1684	SO1369	-9507.5	253	15	100
1685	SO1370	-9522.5	123	15	100
1686	SO1371	-9537.5	253	15	100
1687	SO1372	-9552.5	123	15	100
1688	SO1373	-9567.5	253	15	100
1689	SO1374	-9582.5	123	15	100
1690	SO1375	-9597.5	253	15	100
1691	SO1376	-9612.5	123	15	100
1692	SO1377	-9627.5	253	15	100
1693	SO1378	-9642.5	123	15	100
1694	SO1379	-9657.5	253	15	100
1695	SO1380	-9672.5	123	15	100
1696	SO1381	-9687.5	253	15	100
1697	SO1382	-9702.5	123	15	100
1698	SO1383	-9717.5	253	15	100
1699	SO1384	-9732.5	123	15	100
1700	SO1385	-9747.5	253	15	100
1701	SO1386	-9762.5	123	15	100
1702	SO1387	-9777.5	253	15	100
1703	SO1388	-9792.5	123	15	100
1704	SO1389	-9807.5	253	15	100
1705	SO1390	-9822.5	123	15	100
1706	SO1391	-9837.5	253	15	100
1707	SO1392	-9852.5	123	15	100

FITIPOWER CONFIDENTIAL

1708	SO1393	-9867.5	253	15	100
1709	SO1394	-9882.5	123	15	100
1710	SO1395	-9897.5	253	15	100
1711	SO1396	-9912.5	123	15	100
1712	SO1397	-9927.5	253	15	100
1713	SO1398	-9942.5	123	15	100
1714	SO1399	-9957.5	253	15	100
1715	SO1400	-9972.5	123	15	100
1716	SO1401	-9987.5	253	15	100
1717	SO1402	-10002.5	123	15	100
1718	SO1403	-10017.5	253	15	100
1719	SO1404	-10032.5	123	15	100
1720	SO1405	-10047.5	253	15	100
1721	SO1406	-10062.5	123	15	100
1722	SO1407	-10077.5	253	15	100
1723	SO1408	-10092.5	123	15	100
1724	SO1409	-10107.5	253	15	100
1725	SO1410	-10122.5	123	15	100
1726	SO1411	-10137.5	253	15	100
1727	SO1412	-10152.5	123	15	100
1728	SO1413	-10167.5	253	15	100
1729	SO1414	-10182.5	123	15	100
1730	SO1415	-10197.5	253	15	100
1731	SO1416	-10212.5	123	15	100
1732	SO1417	-10227.5	253	15	100
1733	SO1418	-10242.5	123	15	100
1734	SO1419	-10257.5	253	15	100
1735	SO1420	-10272.5	123	15	100
1736	SO1421	-10287.5	253	15	100
1737	SO1422	-10302.5	123	15	100
1738	SO1423	-10317.5	253	15	100
1739	SO1424	-10332.5	123	15	100
1740	SO1425	-10347.5	253	15	100
1741	SO1426	-10362.5	123	15	100
1742	SO1427	-10377.5	253	15	100
1743	SO1428	-10392.5	123	15	100
1744	SO1429	-10407.5	253	15	100
1745	SO1430	-10422.5	123	15	100
1746	SO1431	-10437.5	253	15	100
1747	SO1432	-10452.5	123	15	100
1748	SO1433	-10467.5	253	15	100
1749	SO1434	-10482.5	123	15	100
1750	SO1435	-10497.5	253	15	100
1751	SO1436	-10512.5	123	15	100
1752	SO1437	-10527.5	253	15	100
1753	SO1438	-10542.5	123	15	100
1754	SO1439	-10557.5	253	15	100
1755	SO1440	-10572.5	123	15	100
1756	SO1441	-10587.5	253	15	100
1757	SO1442	-10602.5	123	15	100
1758	SO1443	-10617.5	253	15	100
1759	SO1444	-10632.5	123	15	100
1760	SO1445	-10647.5	253	15	100
1761	SO1446	-10662.5	123	15	100
1762	SO1447	-10677.5	253	15	100
1763	SO1448	-10692.5	123	15	100
1764	SO1449	-10707.5	253	15	100
1765	SO1450	-10722.5	123	15	100
1766	SO1451	-10737.5	253	15	100
1767	SO1452	-10752.5	123	15	100
1768	SO1453	-10767.5	253	15	100

1769	SO1454	-10782.5	123	15	100
1770	SO1455	-10797.5	253	15	100
1771	SO1456	-10812.5	123	15	100
1772	SO1457	-10827.5	253	15	100
1773	SO1458	-10842.5	123	15	100
1774	SO1459	-10857.5	253	15	100
1775	SO1460	-10872.5	123	15	100
1776	SO1461	-10887.5	253	15	100
1777	SO1462	-10902.5	123	15	100
1778	SO1463	-10917.5	253	15	100
1779	SO1464	-10932.5	123	15	100
1780	SO1465	-10947.5	253	15	100
1781	SO1466	-10962.5	123	15	100
1782	SO1467	-10977.5	253	15	100
1783	SO1468	-10992.5	123	15	100
1784	SO1469	-11007.5	253	15	100
1785	SO1470	-11022.5	123	15	100
1786	SO1471	-11037.5	253	15	100
1787	SO1472	-11052.5	123	15	100
1788	SO1473	-11067.5	253	15	100
1789	SO1474	-11082.5	123	15	100
1790	SO1475	-11097.5	253	15	100
1791	SO1476	-11112.5	123	15	100
1792	SO1477	-11127.5	253	15	100
1793	SO1478	-11142.5	123	15	100
1794	SO1479	-11157.5	253	15	100
1795	SO1480	-11172.5	123	15	100
1796	SO1481	-11187.5	253	15	100
1797	SO1482	-11202.5	123	15	100
1798	SO1483	-11217.5	253	15	100
1799	SO1484	-11232.5	123	15	100
1800	SO1485	-11247.5	253	15	100
1801	SO1486	-11262.5	123	15	100
1802	SO1487	-11277.5	253	15	100
1803	SO1488	-11292.5	123	15	100
1804	SO1489	-11307.5	253	15	100
1805	SO1490	-11322.5	123	15	100
1806	SO1491	-11337.5	253	15	100
1807	SO1492	-11352.5	123	15	100
1808	SO1493	-11367.5	253	15	100
1809	SO1494	-11382.5	123	15	100
1810	SO1495	-11397.5	253	15	100
1811	SO1496	-11412.5	123	15	100
1812	SO1497	-11427.5	253	15	100
1813	SO1498	-11442.5	123	15	100
1814	SO1499	-11457.5	253	15	100
1815	SO1500	-11472.5	123	15	100
1816	SO1501	-11487.5	253	15	100
1817	SO1502	-11502.5	123	15	100
1818	SO1503	-11517.5	253	15	100
1819	SO1504	-11532.5	123	15	100
1820	SO1505	-11547.5	253	15	100
1821	SO1506	-11562.5	123	15	100
1822	SO1507	-11577.5	253	15	100
1823	SO1508	-11592.5	123	15	100
1824	SO1509	-11607.5	253	15	100
1825	SO1510	-11622.5	123	15	100
1826	SO1511	-11637.5	253	15	100
1827	SO1512	-11652.5	123	15	100
1828	SO1513	-11667.5	253	15	100
1829	SO1514	-11682.5	123	15	100

FITIPOWER CONFIDENTIAL

1830	SO1515	-11697.5	253	15	100
1831	SO1516	-11712.5	123	15	100
1832	SO1517	-11727.5	253	15	100
1833	SO1518	-11742.5	123	15	100
1834	SO1519	-11757.5	253	15	100
1835	SO1520	-11772.5	123	15	100
1836	SO1521	-11787.5	253	15	100
1837	SO1522	-11802.5	123	15	100
1838	SO1523	-11817.5	253	15	100
1839	SO1524	-11832.5	123	15	100
1840	SO1525	-11847.5	253	15	100
1841	SO1526	-11862.5	123	15	100
1842	SO1527	-11877.5	253	15	100
1843	SO1528	-11892.5	123	15	100
1844	SO1529	-11907.5	253	15	100
1845	SO1530	-11922.5	123	15	100
1846	SO1531	-11937.5	253	15	100
1847	SO1532	-11952.5	123	15	100
1848	SO1533	-11967.5	253	15	100
1849	SO1534	-11982.5	123	15	100
1850	SO1535	-11997.5	253	15	100
1851	SO1536	-12012.5	123	15	100
1852	SHIELDING	-12055	268	30	70
1853	COM1_OUT	-12105	268	30	70
1854	COM1_OUT	-12155	268	30	70
1855	SHIELDING	-12205	268	30	70
1856	F_CtrlR	-12403	288	80	30
1857	OEVR	-12303	248	80	30
1858	SYNC1R	-12403	208	80	30
1859	SYNC2R	-12303	168	80	30
1860	UDR	-12403	128	80	30
1861	CKVR	-12303	88	80	30
1862	STV2R	-12403	48	80	30
1863	STV1R	-12303	8	80	30
1864	F_CtrlR	-12403	-32	80	30
1865	STBNR	-12303	-72	80	30
	ALIGNMENT_M	-12131.5	115.5		
	ARK_L				
	ALIGNMENT_M	12131.5	115.5		
	ARK_R				

FITIPOWER CONFIDENTIAL
NO DISCLOSURE

17. REVISION HISTORY

Reversion	Content	Date
1.2	Only MIPI interface (page 9)	2014/08
1.3	MIPI speed 4lane: 500Mbps, MIPI speed 2lane: 650Mbps (page 3) MIPI CMD en_2lane(0) at RB2h (page 21)	2015/09/01
1.4	1. Chip size (page 3) 2. Chip outline dimension (page 56) 3. 增加 bump size (page 58)	2015/09/07
1.5	1. Remove cascade, PWM, CABC function (page 3) 2. Add MIPI 3 lane application(page 3) 3. Modify application circuit(page 7) 4. GAMH tie to AVDD instead of AVDDG (page 8) 5. All source output are GND when STBYB ="L" (page 8) 6. Disable CABC_EN[1:0] function pin(page 9) 7. Modify PINCTL control function(page 10) 8. Modify PWR_EN function pin(page 10) 9. Disable FBA, DRVA, FBH, DRVH, FBL, DRVL, DRVL_B, AVDDG pin(page 10) 10. Add and modify MIPI control register of MIPI 3 lane application, CABC_EN function and PWR_EN function.(page 20~26) 11. Modify pad coordinate(page 58~73) 12. Add LVBIT and LVBIT pin description. (page 10)	2016/07/28
1.1	1. Revise RB2h register	2017/11/24

FITIPOWER CONFIDENTIAL
NO DISCLOSURE

Appendix A : BIST pattern

R→G→B→Black→White→Color Bar→Horizontal 256 gray scale→Vertical 256 gray scale→Crosstalk pattern →Chess board (L255/L0)→Flicker pattern→Black background with white out frame

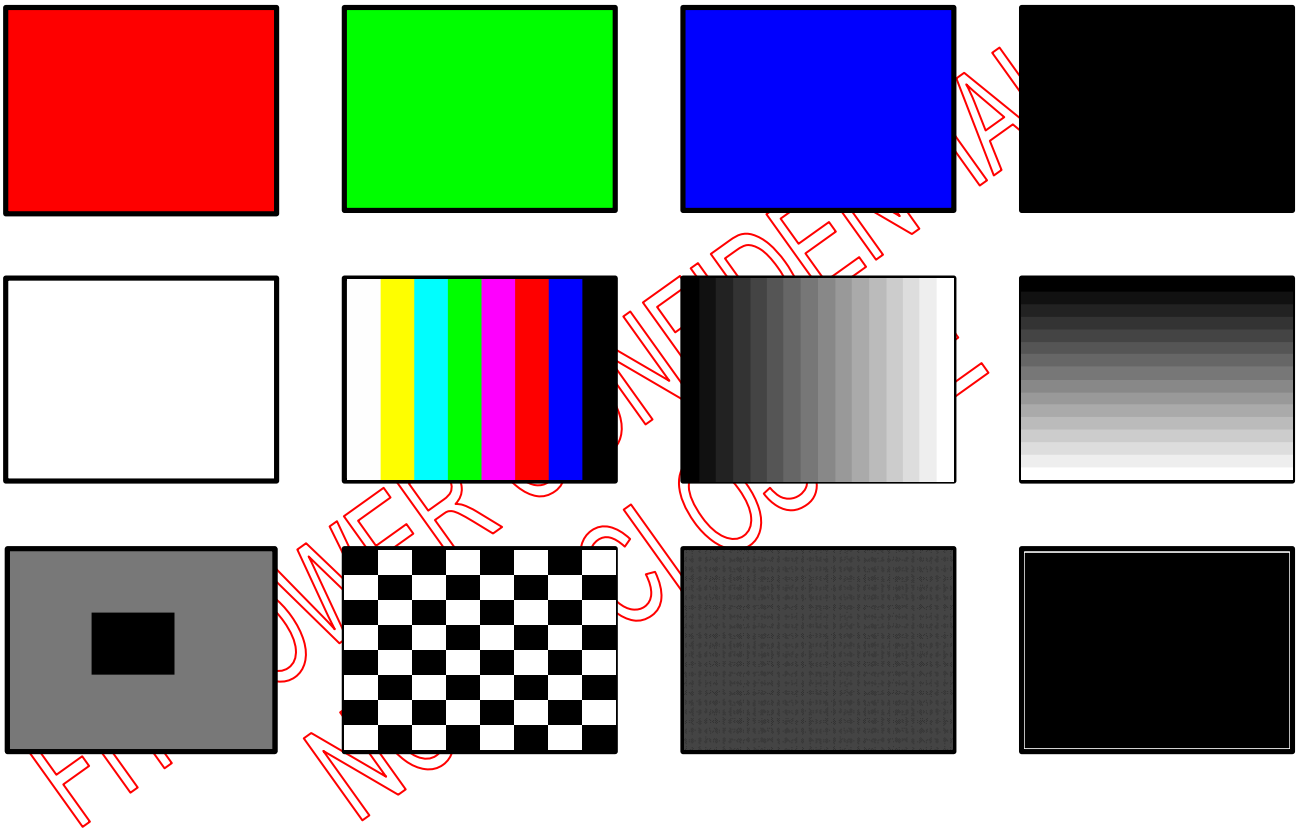

FITIPOWER CONFIDENTIAL
NOT TO BE CIOSED