LLC Series Resonant Converter

再谈LLC串联谐振变换器

Alpha J. Zhang 章进法

Shanghai, March 2010

Delta Confidential

Typical Architecture of Switching Power Supply

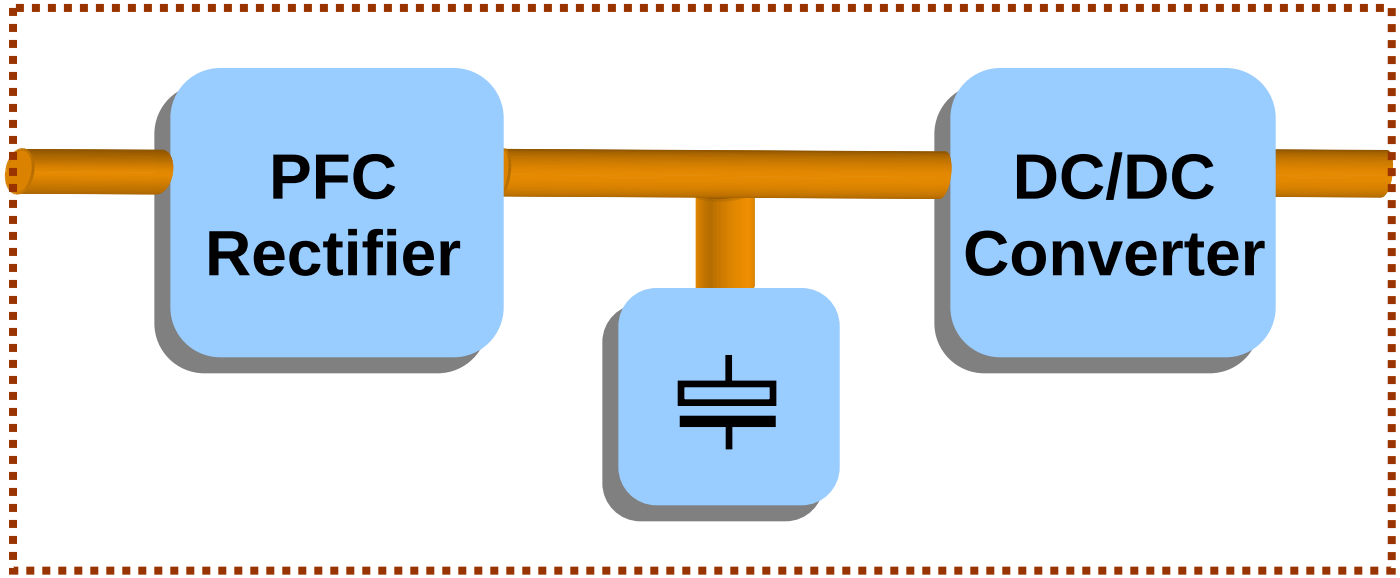

1. PFC rectifier for satisfying input harmonic current limit
2. 400v Bus voltage design for small bus capacitor selection
3. DC/DC Converter operates at 400v input at normal operation
4. DC/DC operates at lower input voltage when AC line fails

本页已使用福昕阅读器进行编辑。
福昕软件(C)2005-2010，版权所有，
仅供试用。

Efficiency Characteristic of Conventional Converters

Low Efficiency at High Input
High Efficiency at Low Input

- Single-end Forward Converter
- Dual-Switch Forward Converter
- Half-Bridge DC/DC Converter
- Full-Bridge DC/DC Converter
- Asymmetric H/B DC/DC Converter
- Phase-Shift F/B DC/DC Converter
- SPRC Bridge DC/DC Converters

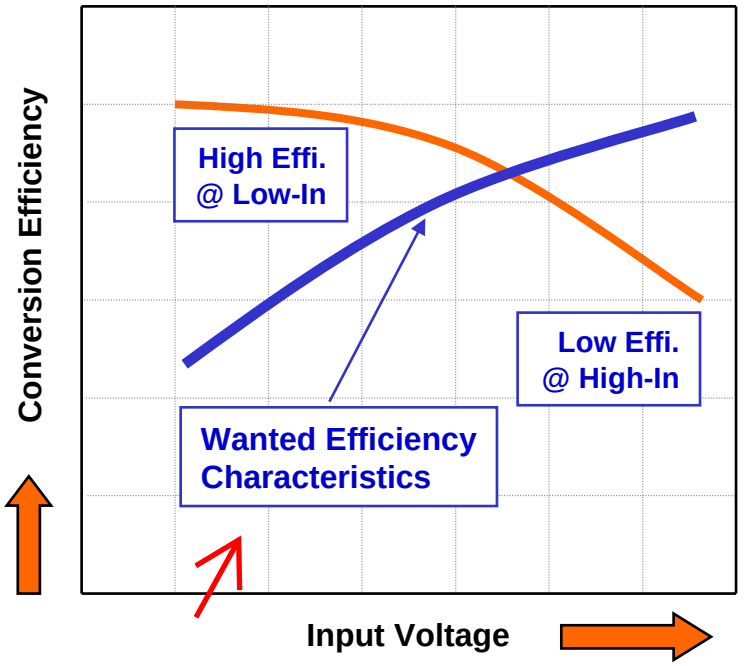

本页已使用福昕阅读器进行编辑。
福昕软件(C)2005-2010，版权所有，
仅供试用。

LLC-Series Resonant Converter
--- LLC-SRC

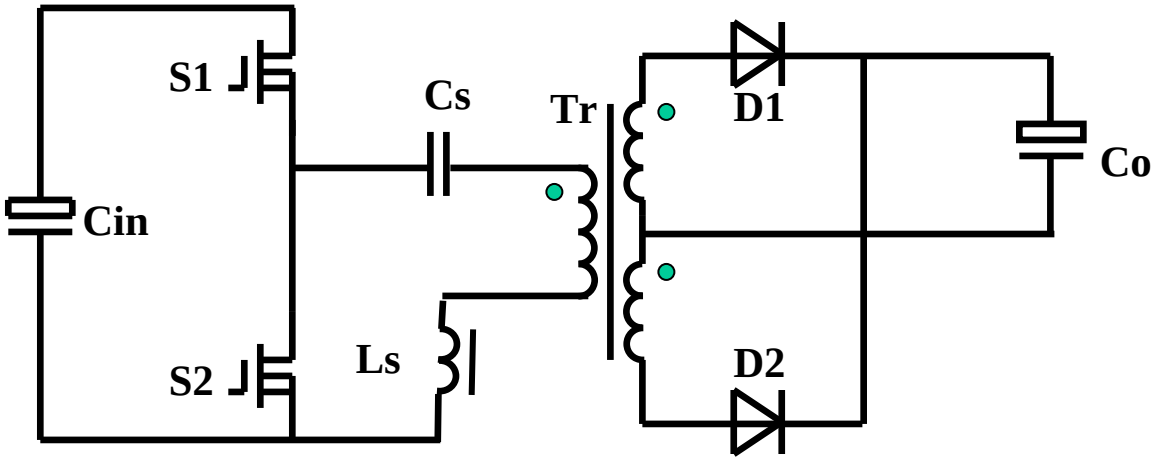

1. Whole range ZVS for switches and ZCS for rectifiers
2. Wide range operation and higher efficiency for higher input
3. 96% efficiency under variable frequency control
4. Magnetic integration and smaller size

本页已使用福昕阅读器进行编辑。
福昕软件(C)2005-2010，版权所有，
仅供试用。

Operation Analysis of LLC-SRC Converter

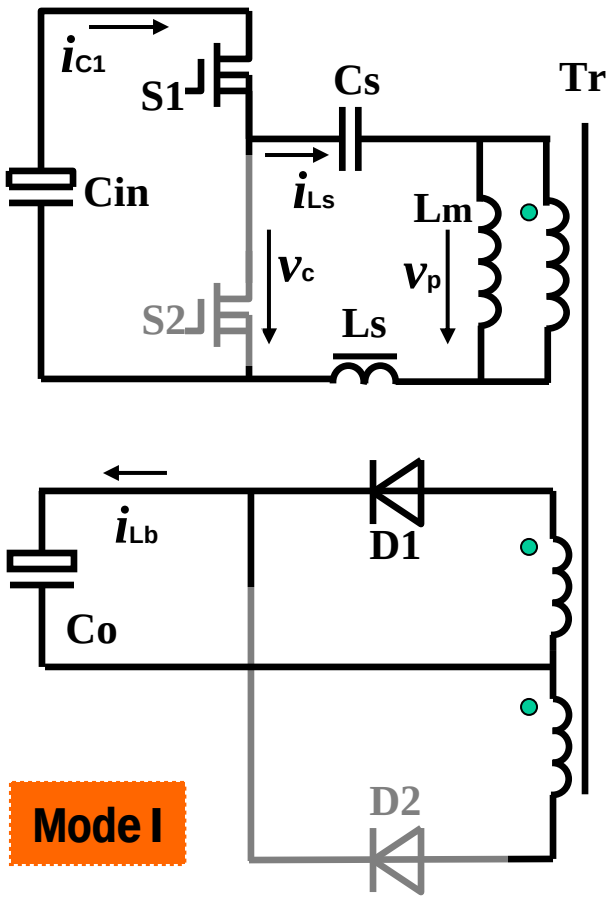

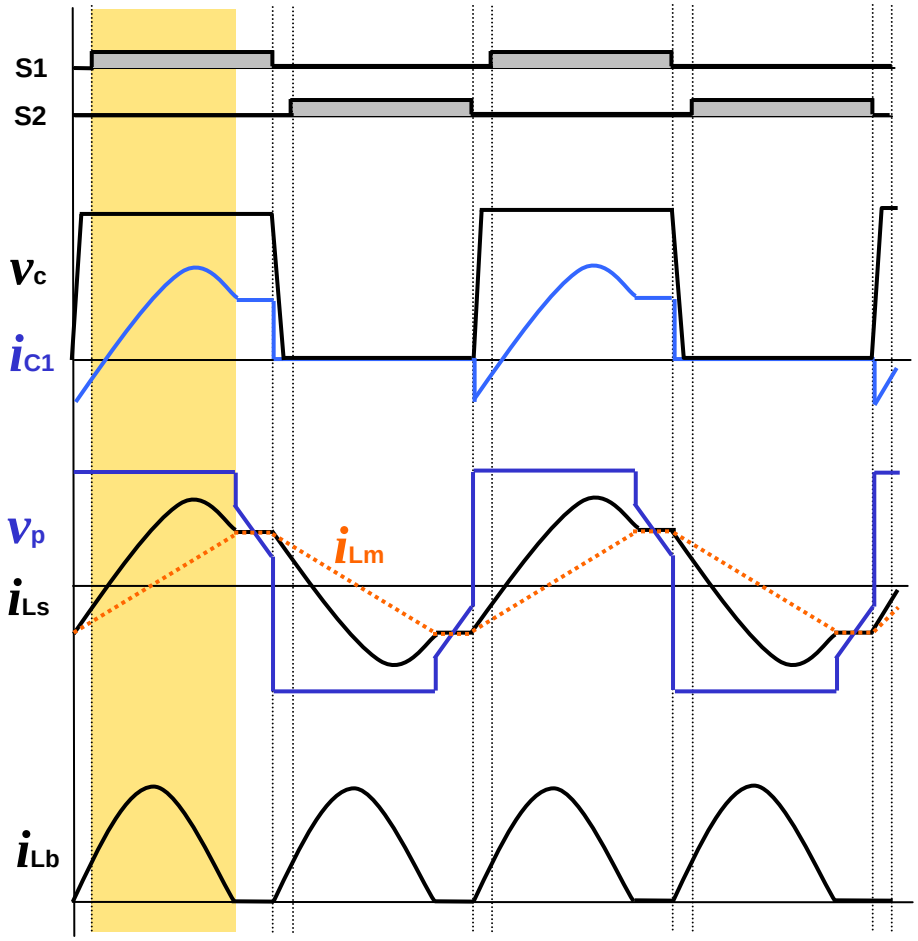

Operation Analysis of LLC-SRC Converter

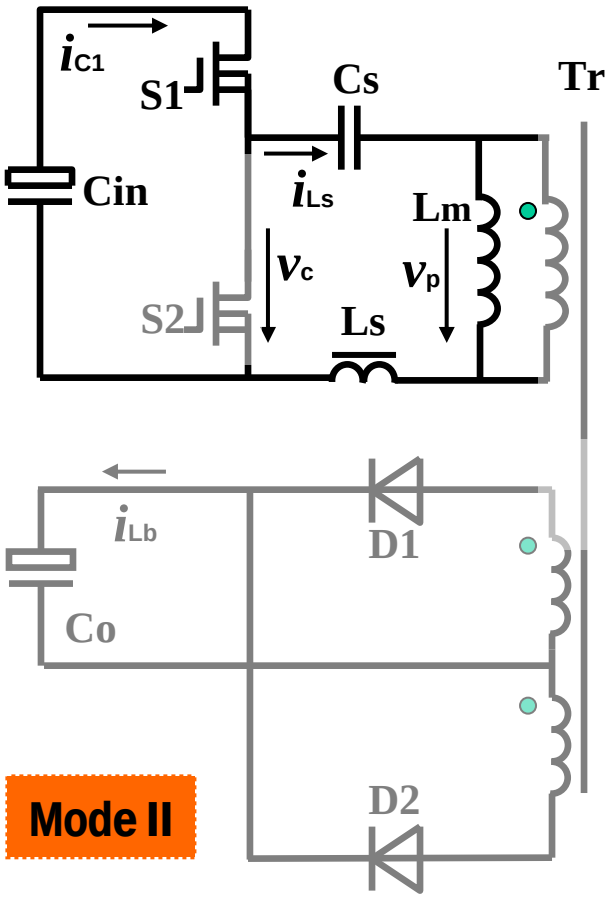

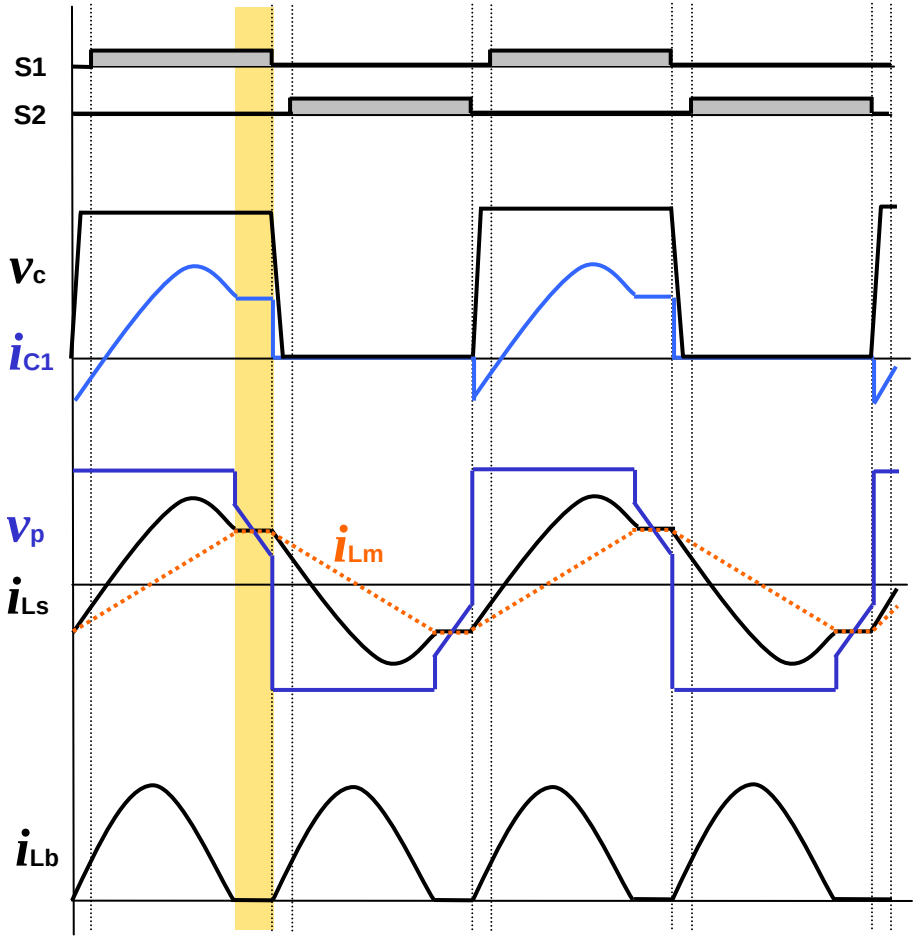

Operation Analysis of LLC-SRC Converter

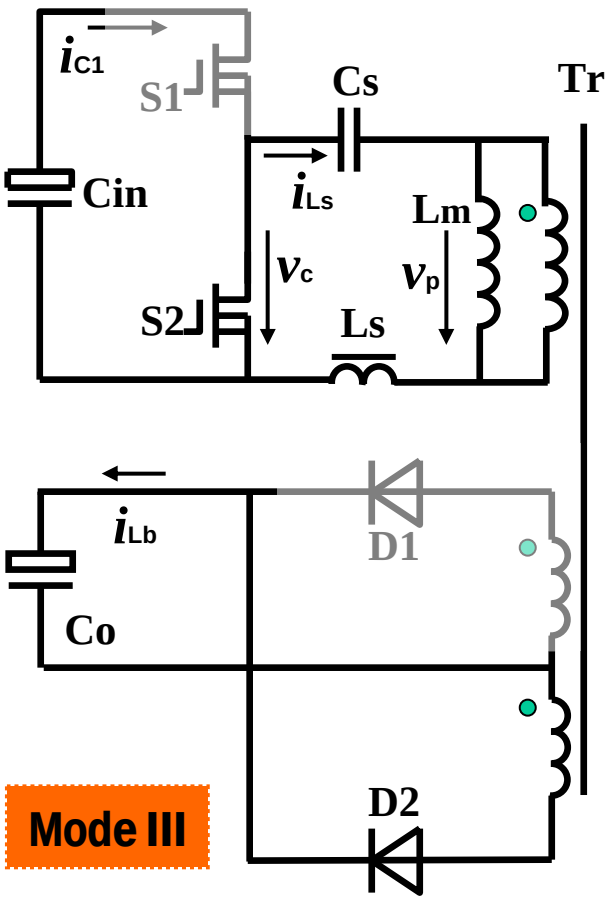

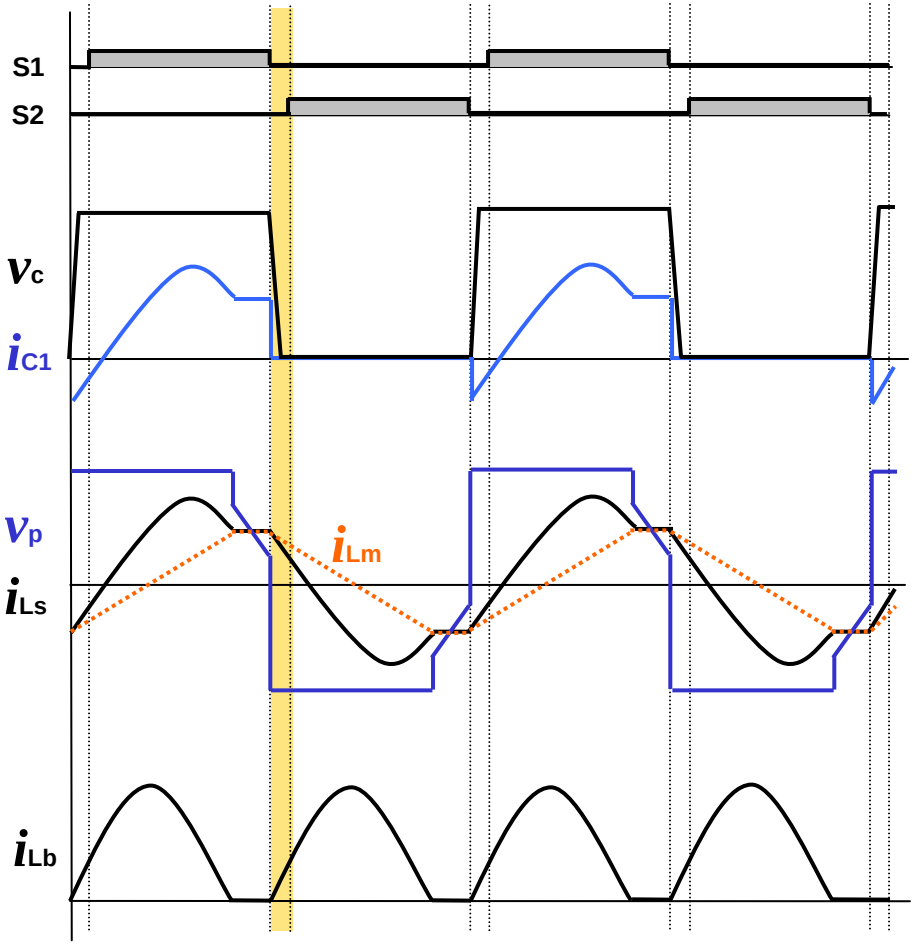

Typical Operation Current Waveforms:

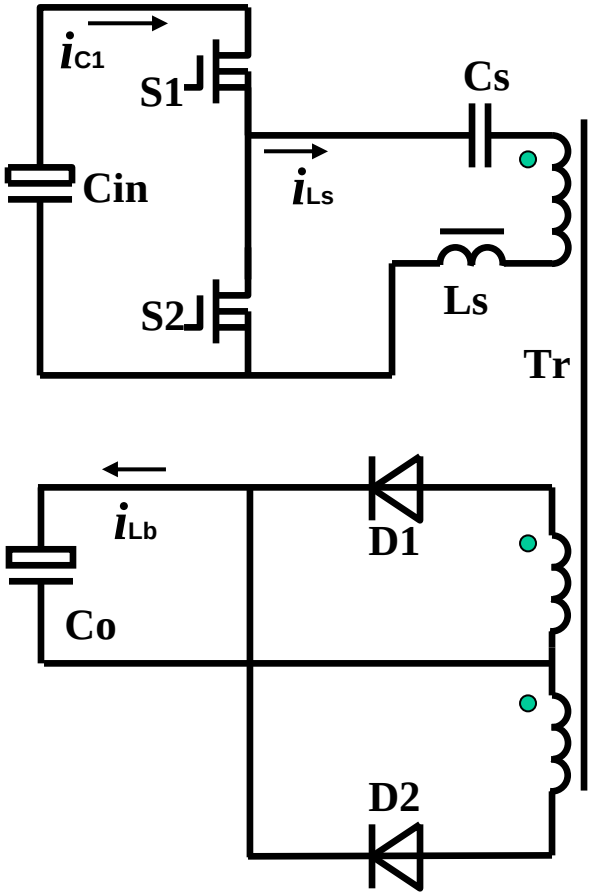

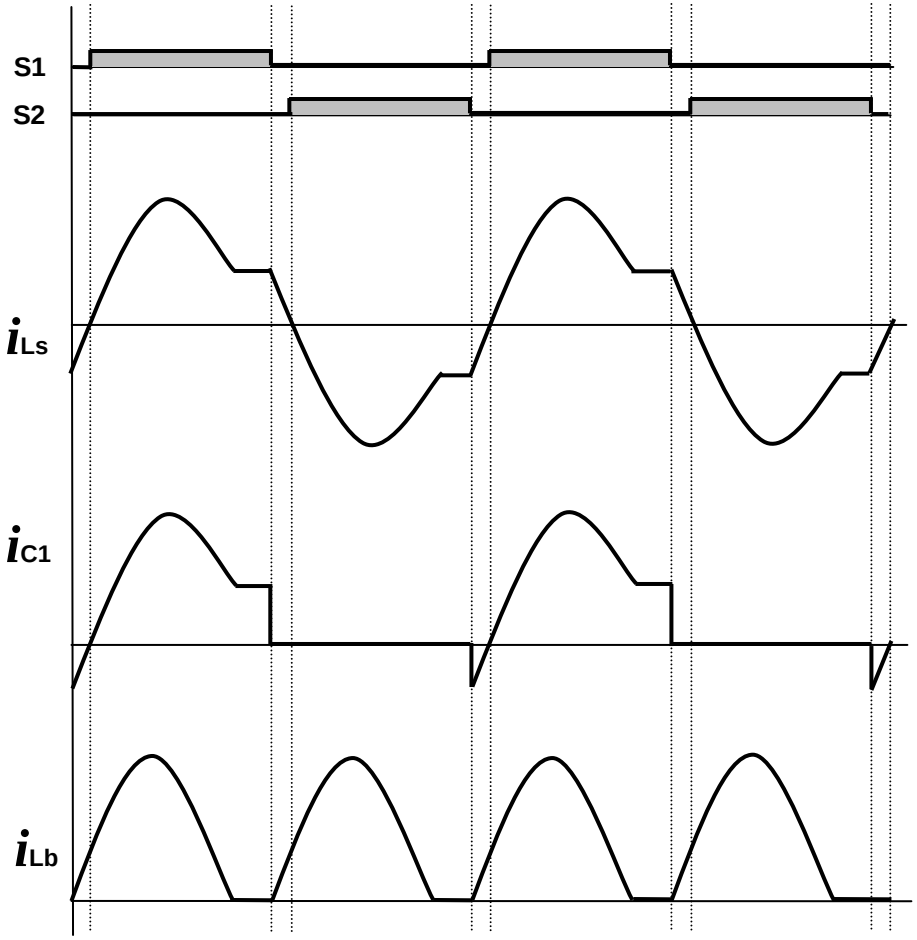

DC Gain vs. Switching Frequency

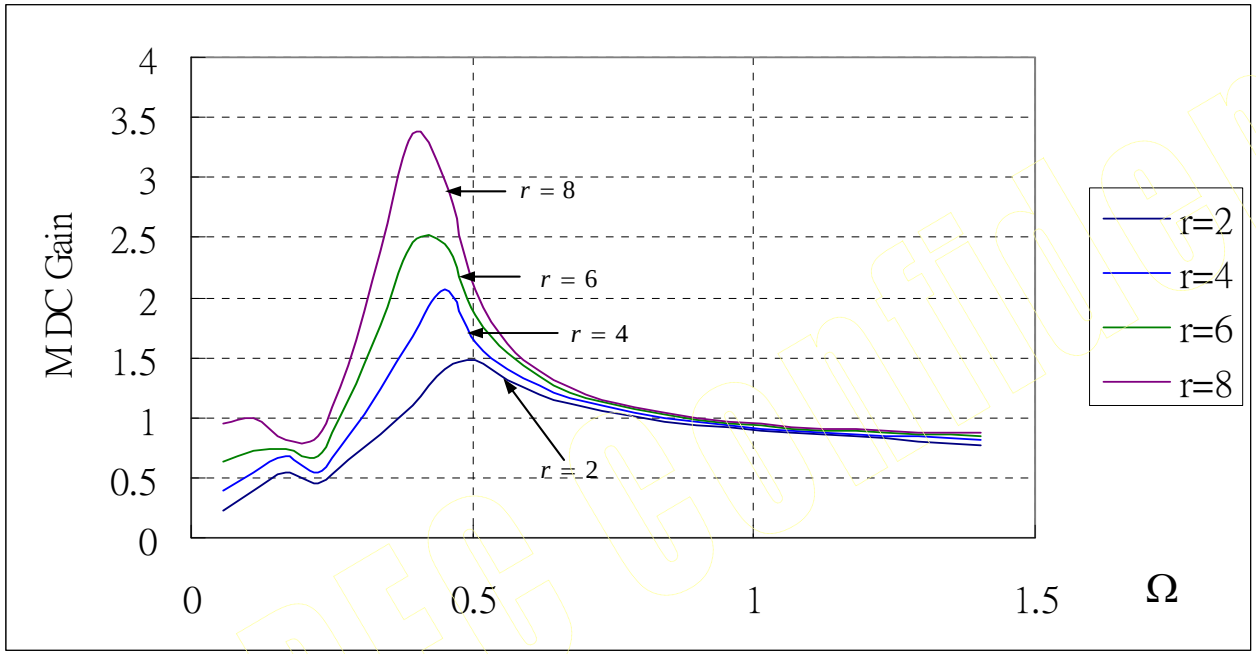

$$r = \frac{n^2 R_o}{\omega_R L_s}$$

$$\Omega = \frac{\omega}{\omega_R}$$

$$V_o = \frac{V_{in}}{2n} + \frac{I_m}{4nC_s}\left(T - T_R\right)$$

$$\left|T - T_R\right| << T_R$$

DPE Confidential

Experimental Verification of LLC-SRC Converter

---- H/B Converter with 400V Input and 48V 20A Output

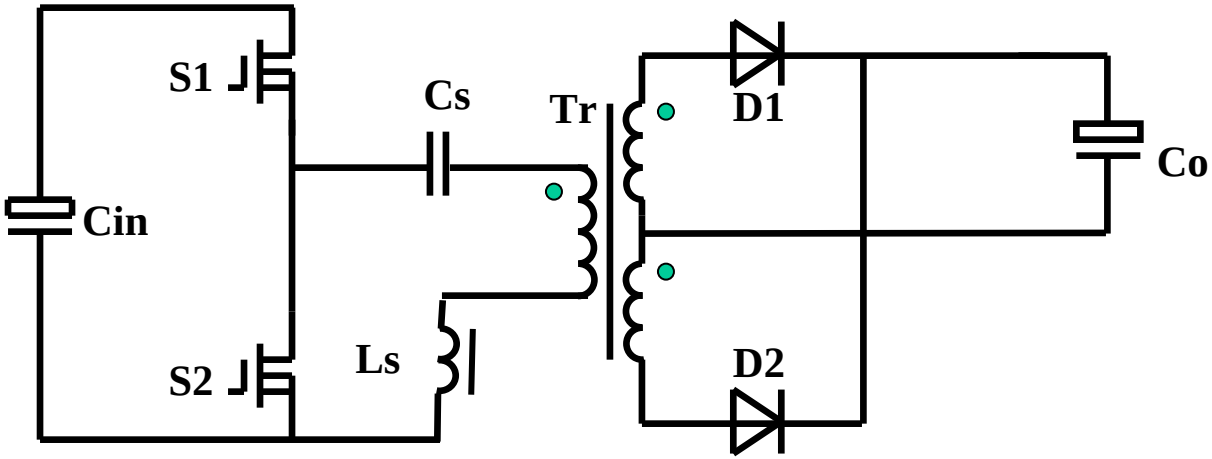

S1,S2: IRFP37N50A
D1,D2: 30CPQ150
Tr: EE42/20 - 3F3 (14T:3T:3T)

C1: 470uF / 450V
Cs: 22nF *4
C3: 1000uF / 80V*6

Tested Results: Conversion Efficiency

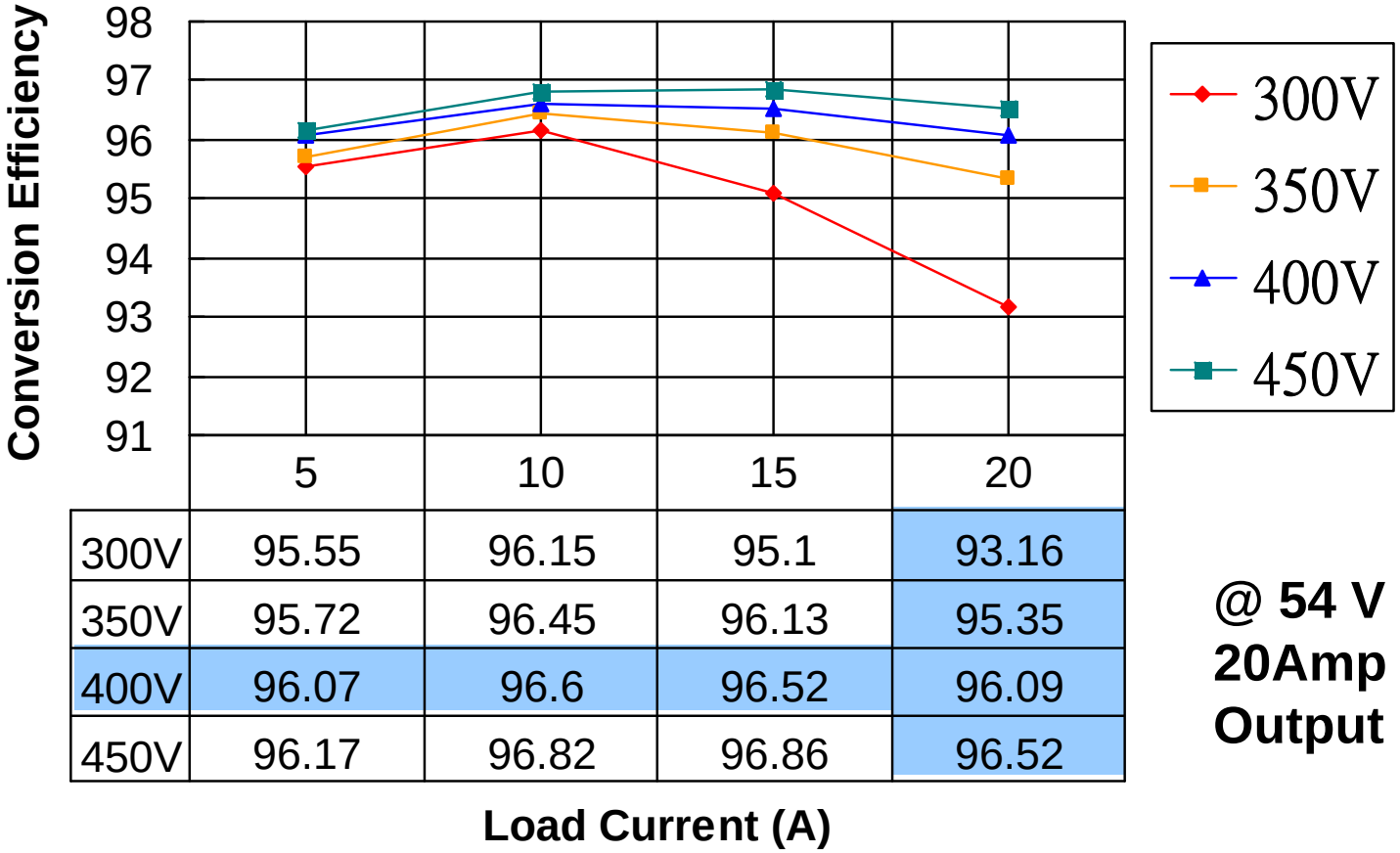

	5	10	15	20
300V	95.55	96.15	95.1	93.16
350V	95.72	96.45	96.13	95.35
400V	96.07	96.6	96.52	96.09
450V	96.17	96.82	96.86	96.52

@ 54 V
20Amp
Output

Comparison with Asymmetrical H/B Converter

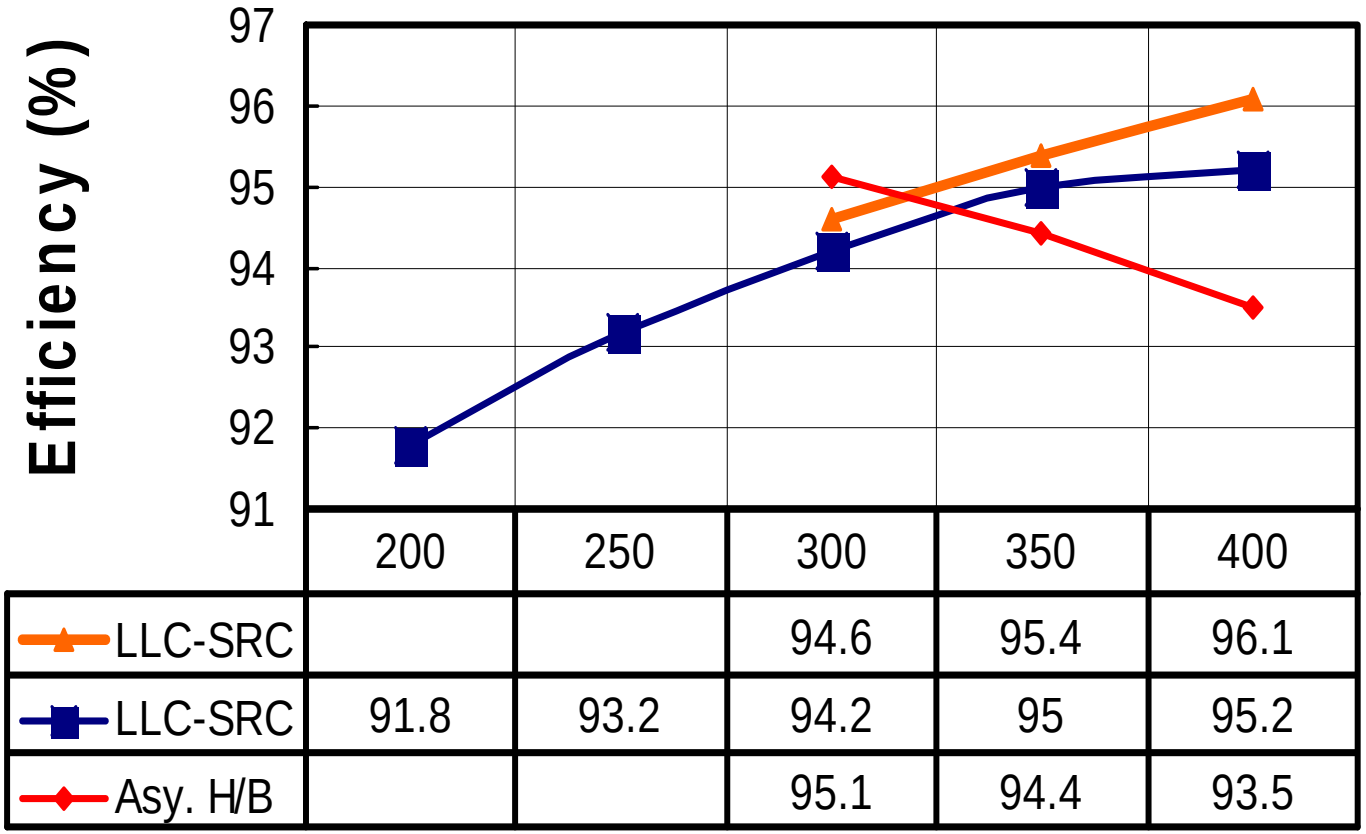

400V Input @ 54 V Output

Tested Results: Frequency Changing

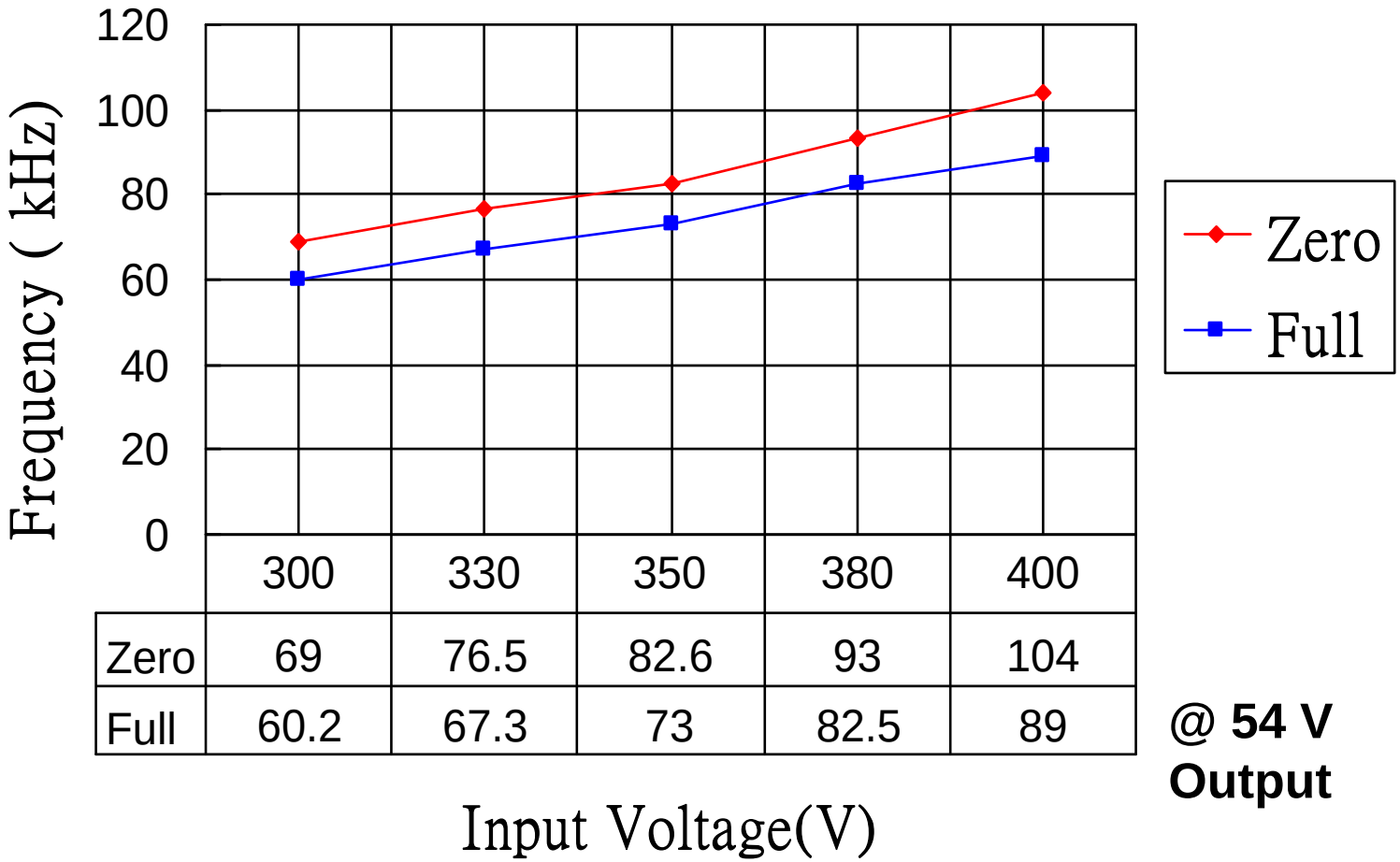

	300	330	350	380	400
Zero	69	76.5	82.6	93	104
Full	60.2	67.3	73	82.5	89

@ 54 V Output

Early Stage Demonstration Design

---- High Efficiency & Low Cost Adapter

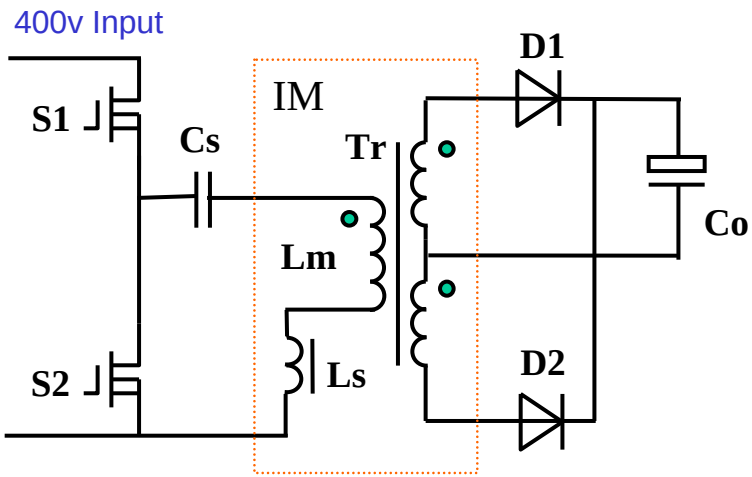

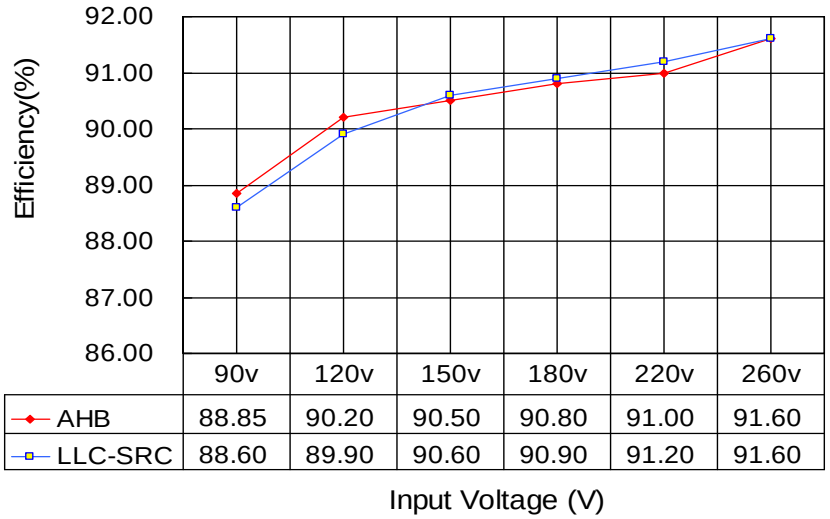

LLC-SRC with Diode Rectifier

300Khz Switching
Schuttky Diode Rectifiers
250v-400v Input Range Operation
>20mS Hold-up Time Design
47u Bus Capacitor
EFD25 Core for Transformer

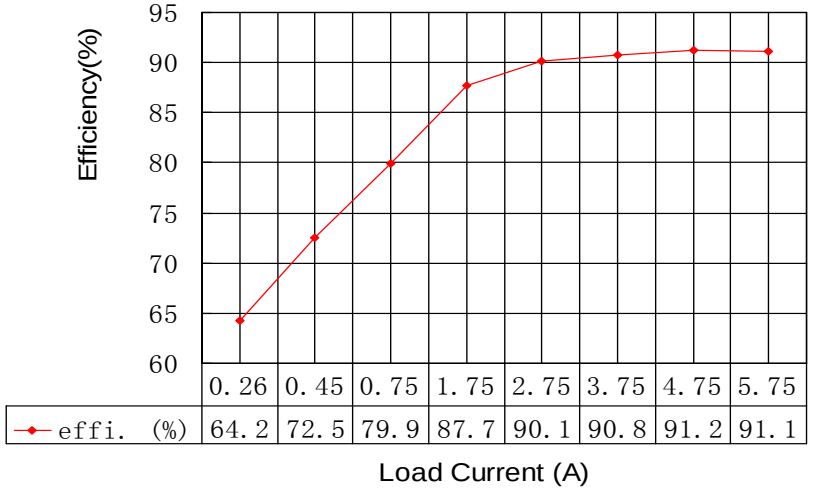

Early Stage Demonstration Design

---- Symmetrical Half-Bridge LLC-SRC DC/DC Converter

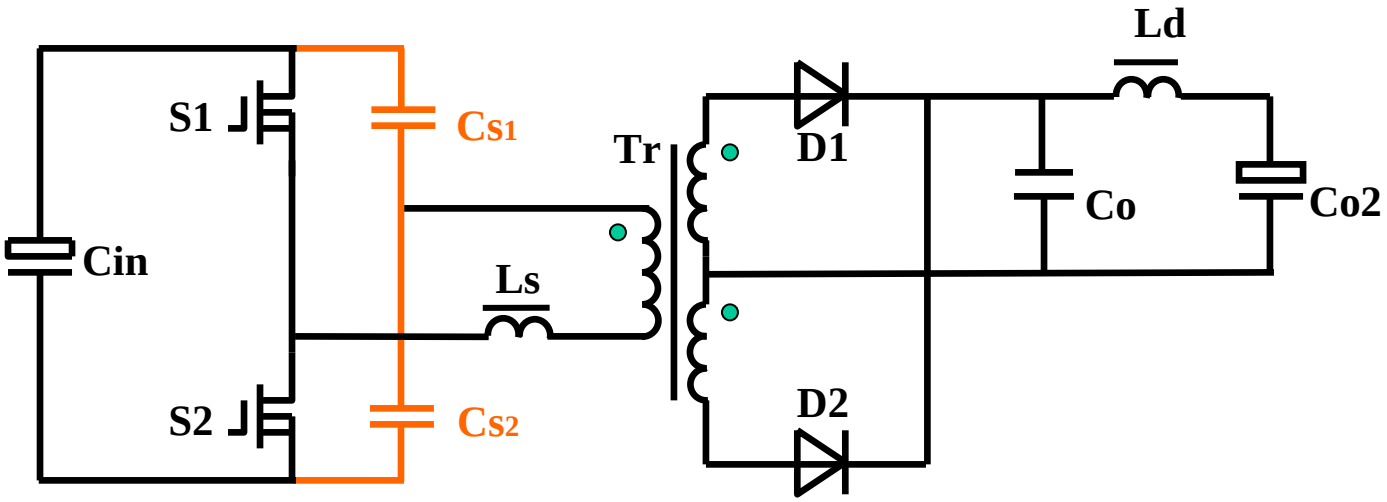

Size:	330*120*70 mm	Size:	220*120*40 mm
Frequency:	150kHz	Frequency.:	340kHz
Efficiency:	81%~87%	Efficiency:	85%~91%
Power density:	6W/inch^3	Power density:	15W/inch^3

LLC-SRC Topology Extensions

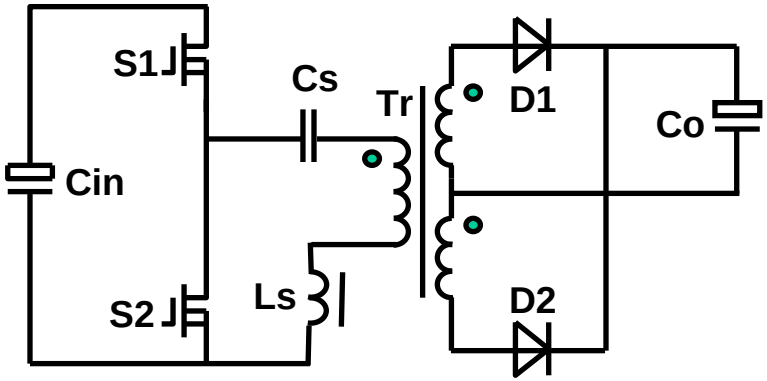

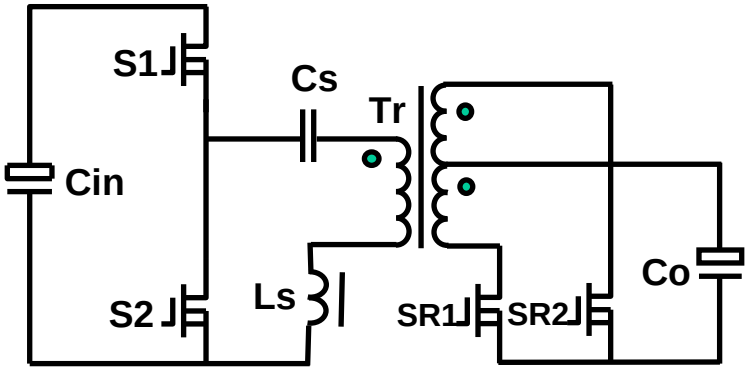

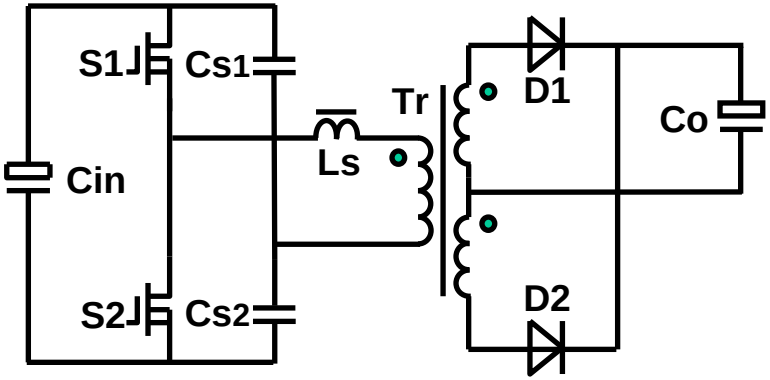

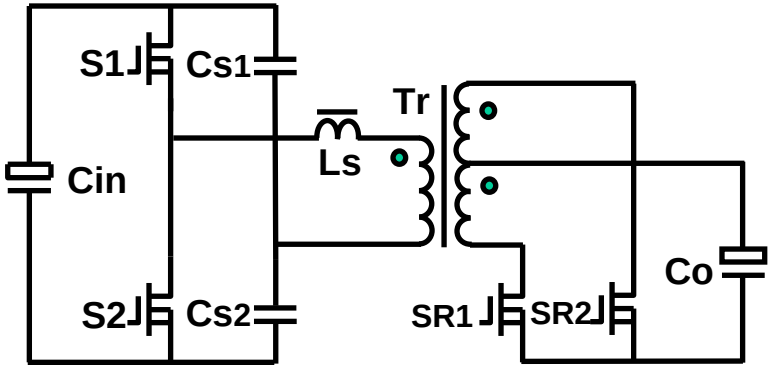

LLC-SRC Topology Extensions

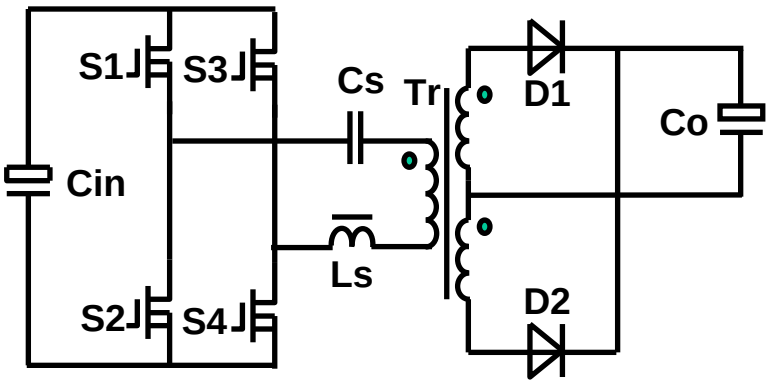

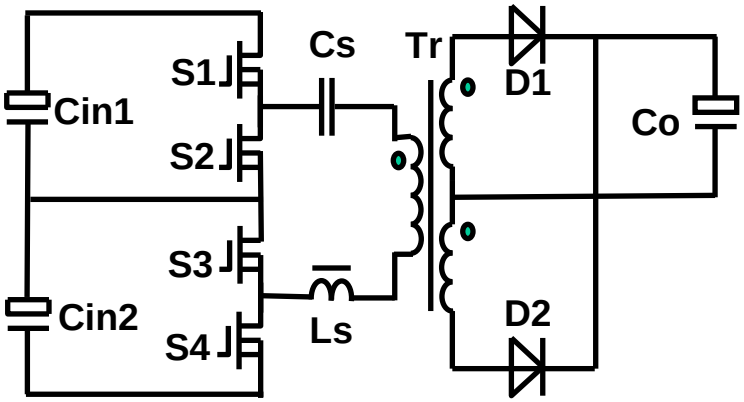

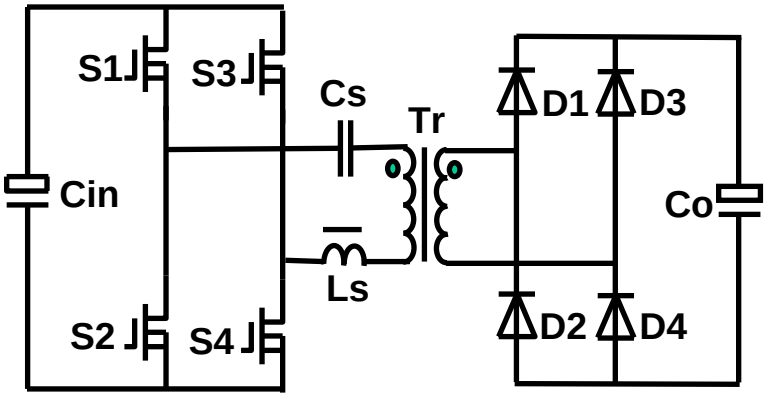

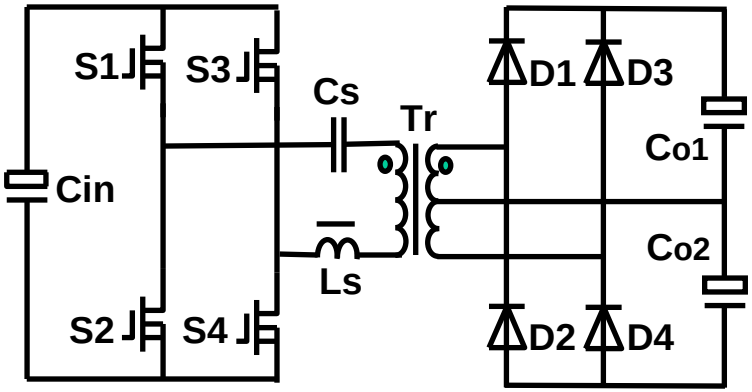

Application for High Density Modular Converter

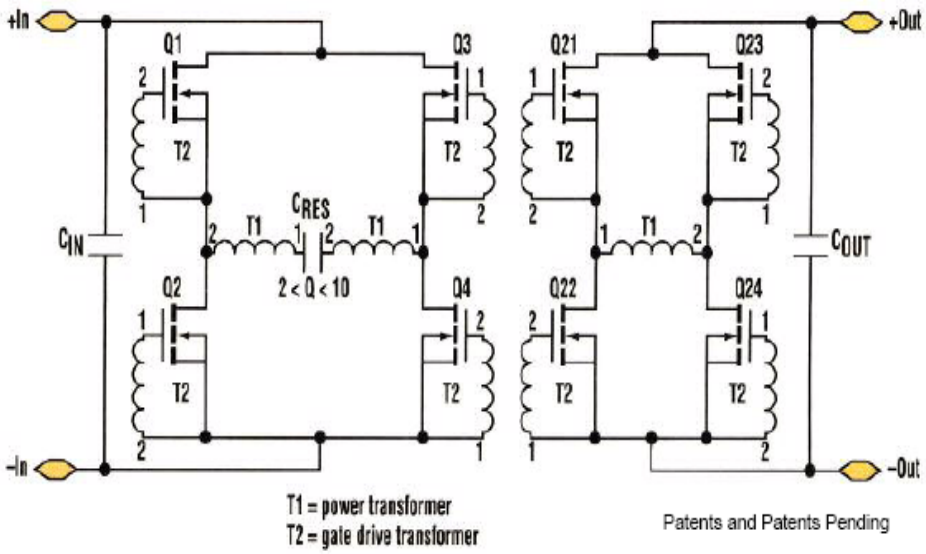

Patents and Patents Pending

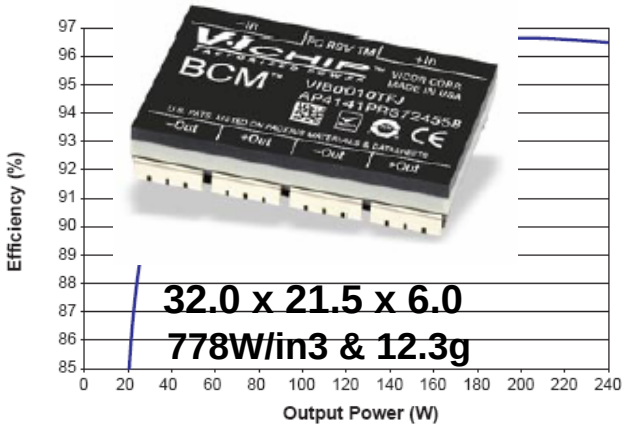

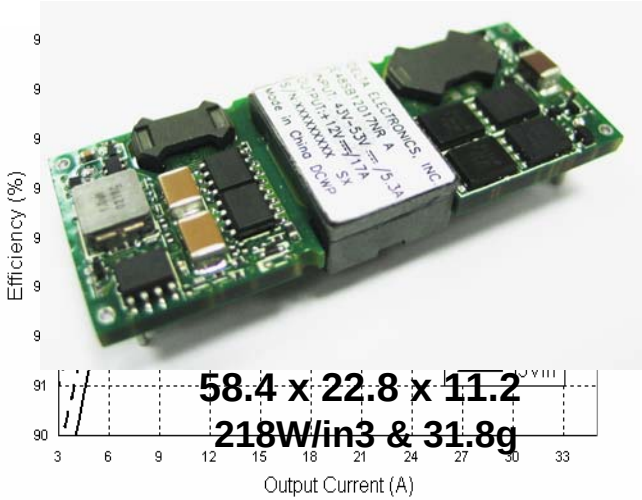

- Proprietary class of ZCS and ZVS Sine Amplitude Converters
- C_{RES} forms a proprietary low Q oscillator with T1
- Proprietary recycling of gate drive energy
- Locked by proprietary "servo control" to the low Q resonance
- Proprietary soft start and control architecture

Application for High Efficiency LED Power

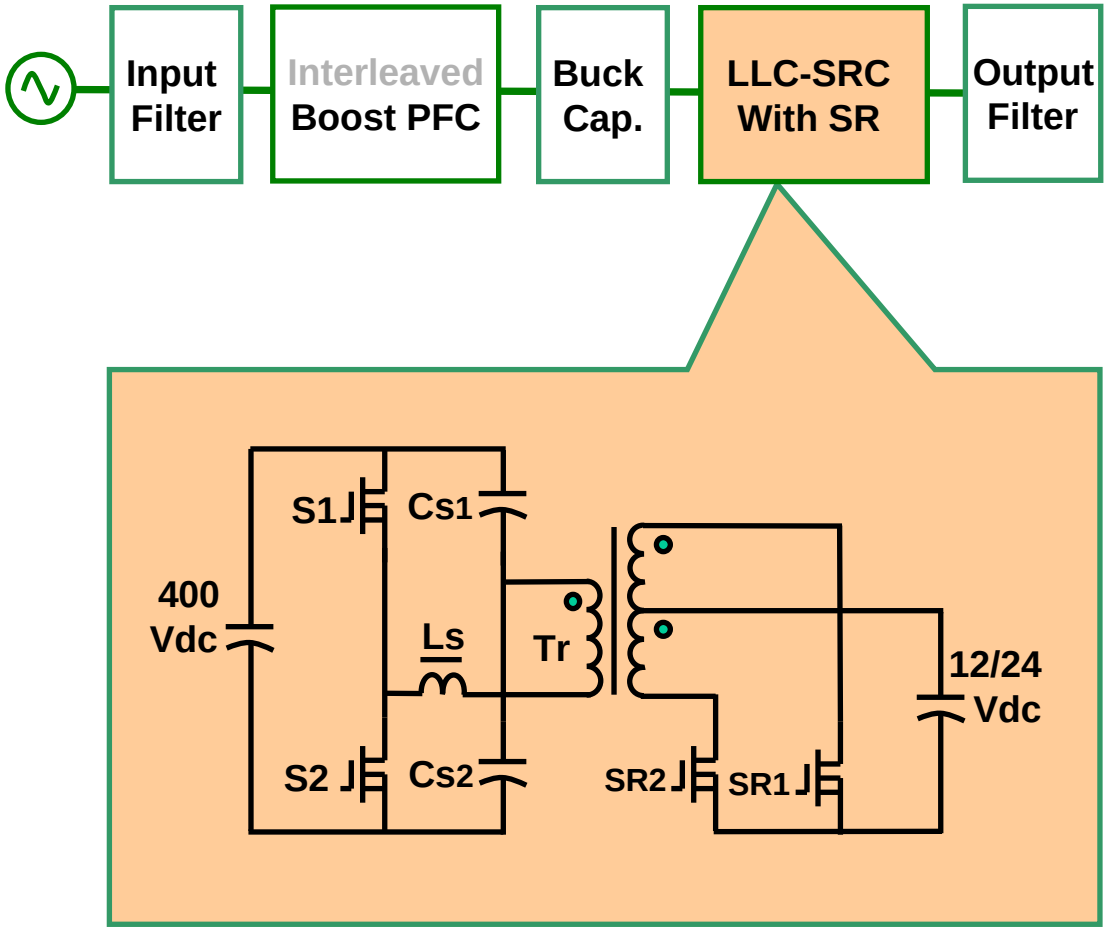

Application for Golden/Platinum Sever Power

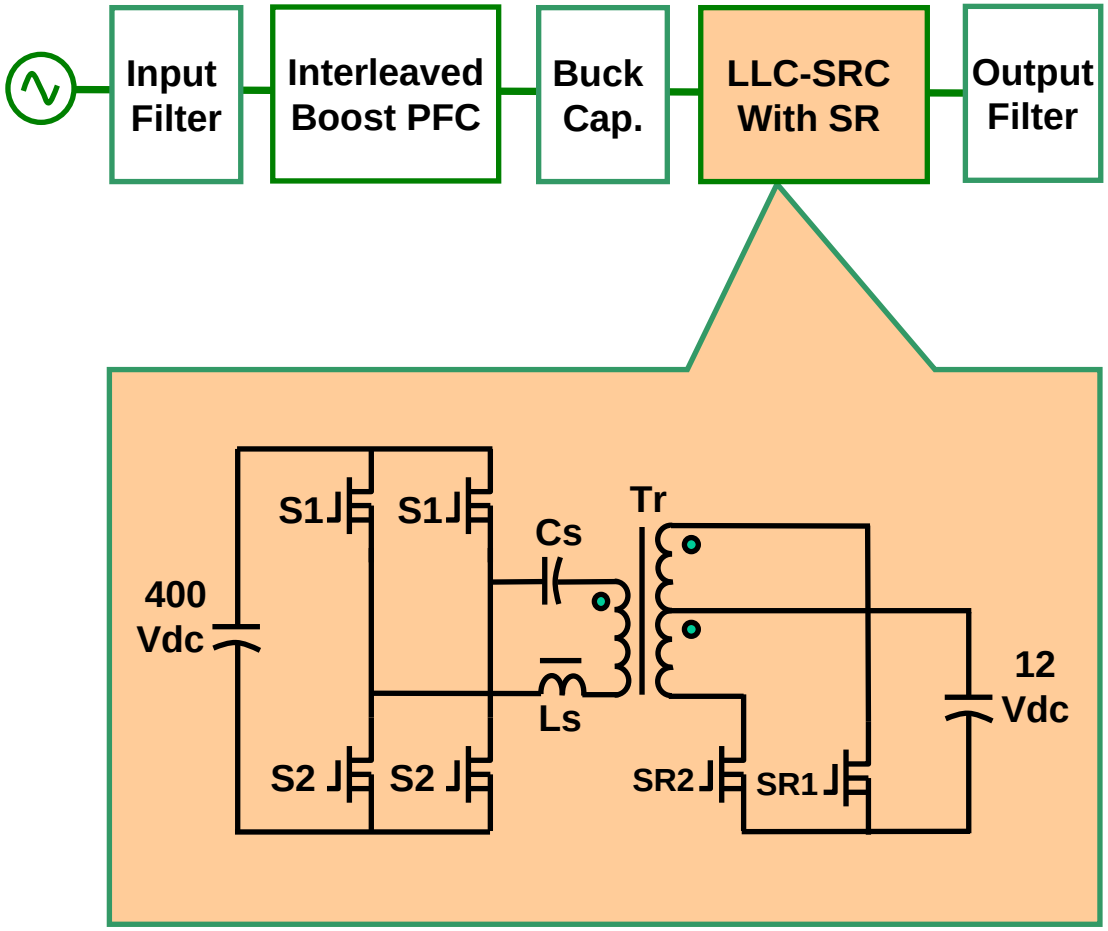

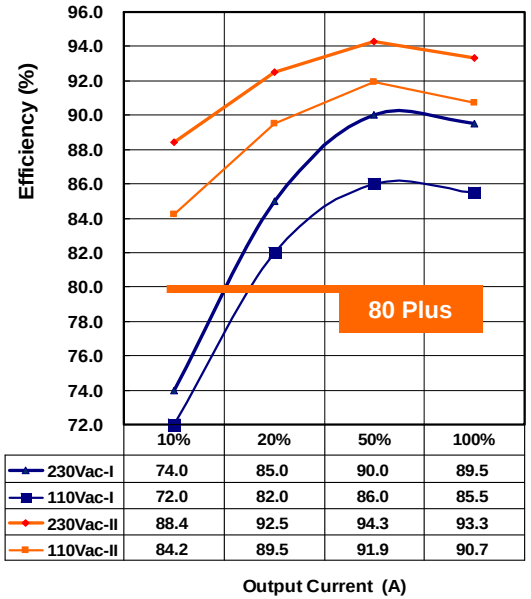

	10%	20%	50%	100%
230Vac-I	74.0	85.0	90.0	89.5
110Vac-I	72.0	82.0	86.0	85.5
230Vac-II	88.4	92.5	94.3	93.3
110Vac-II	84.2	89.5	91.9	90.7

Application for High Efficiency Rectifier

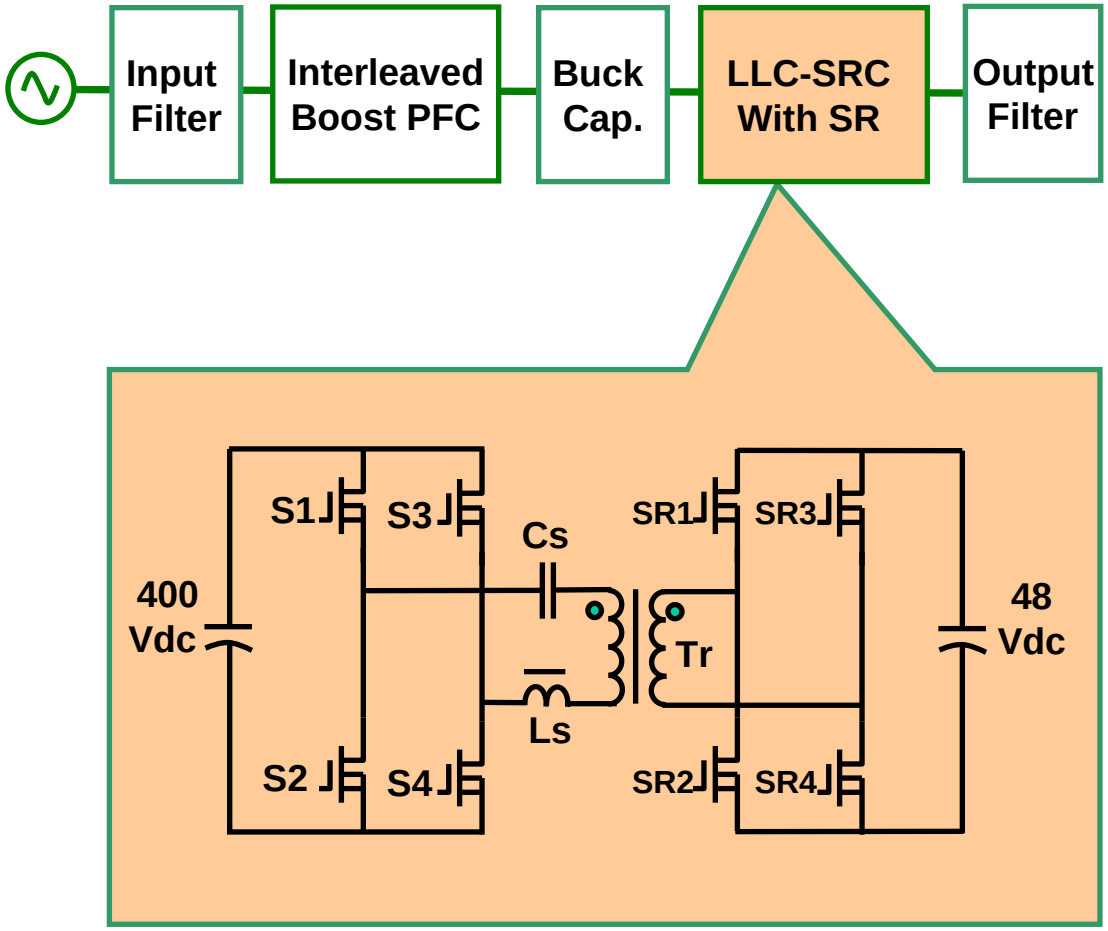

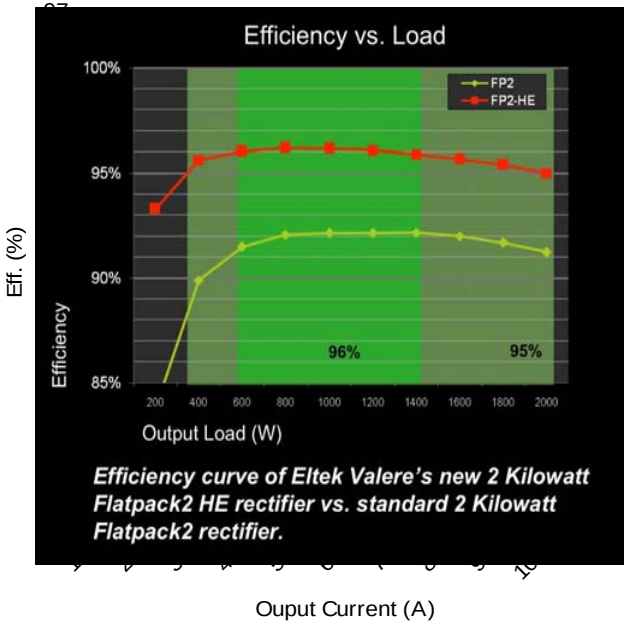

Application for PHEV/EV AC/DC Charger

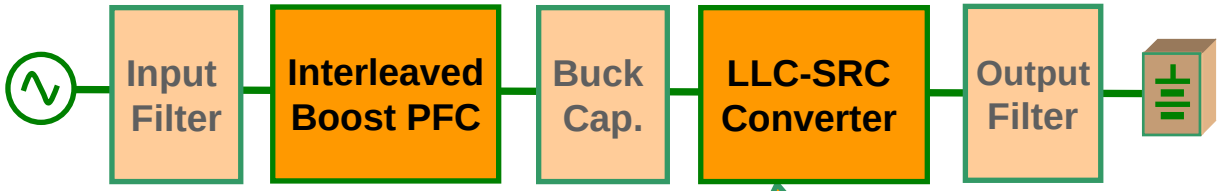

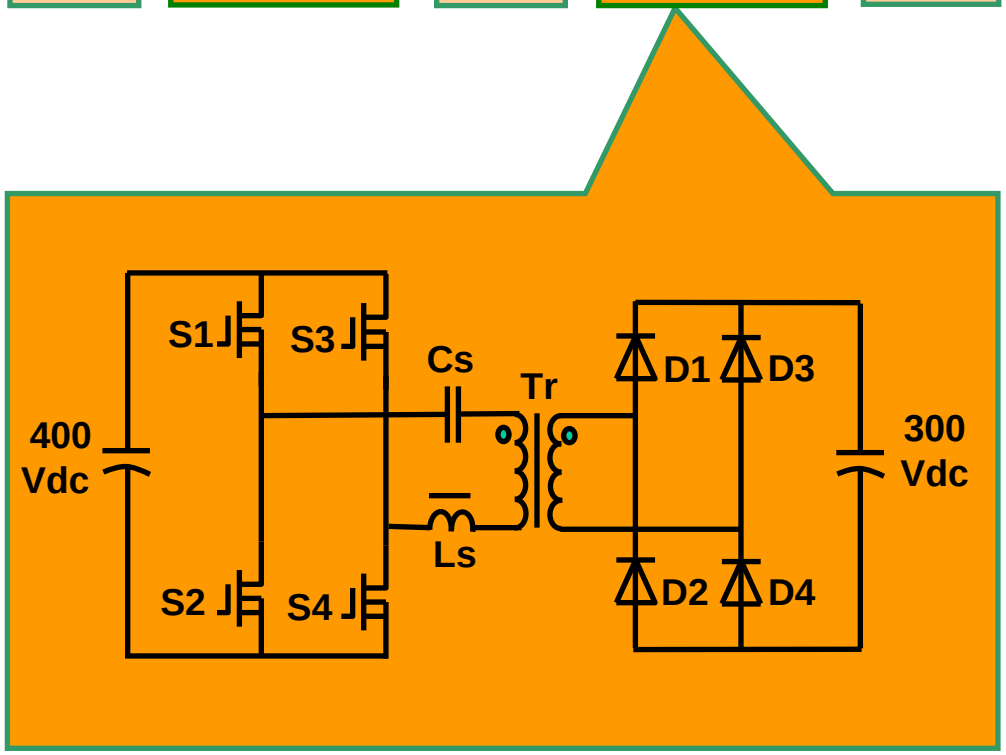

Application for High Efficiency Solar Inverter

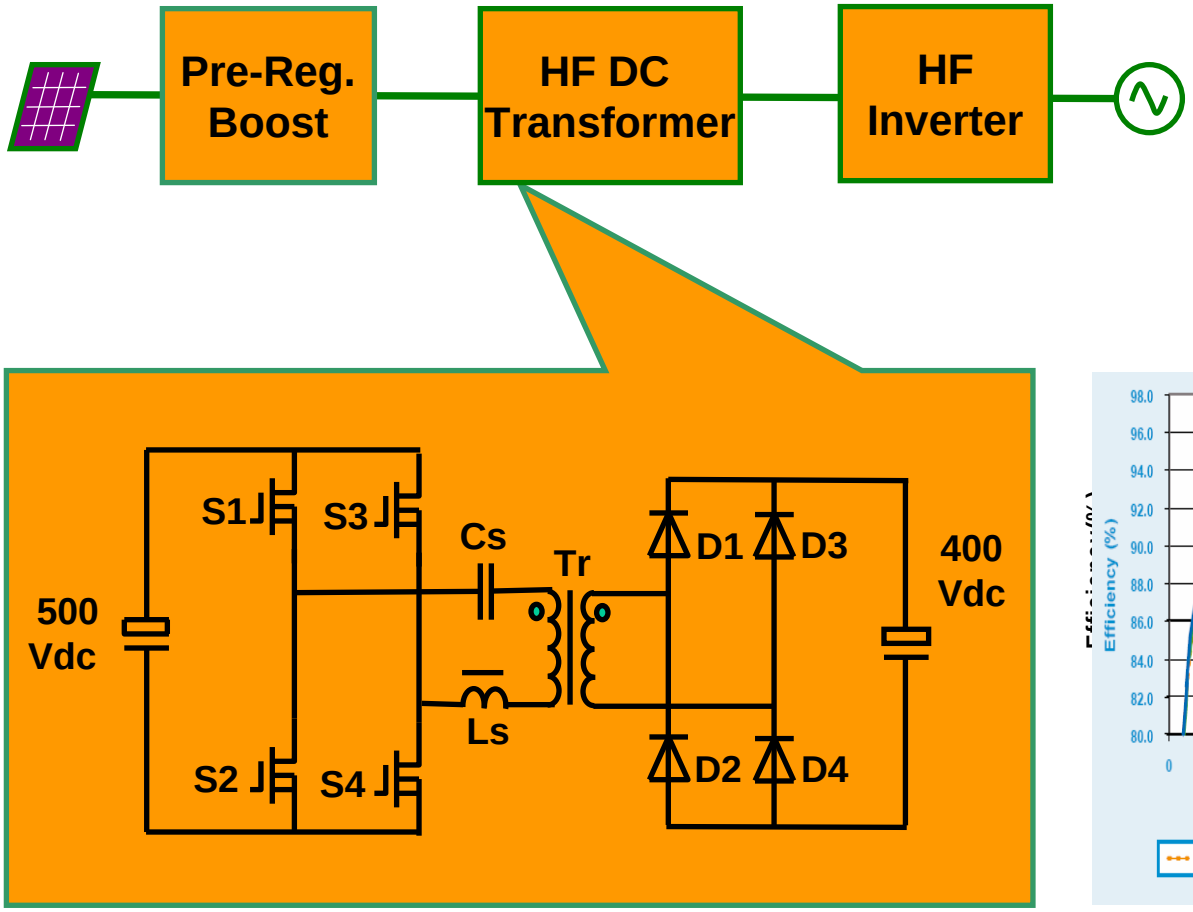

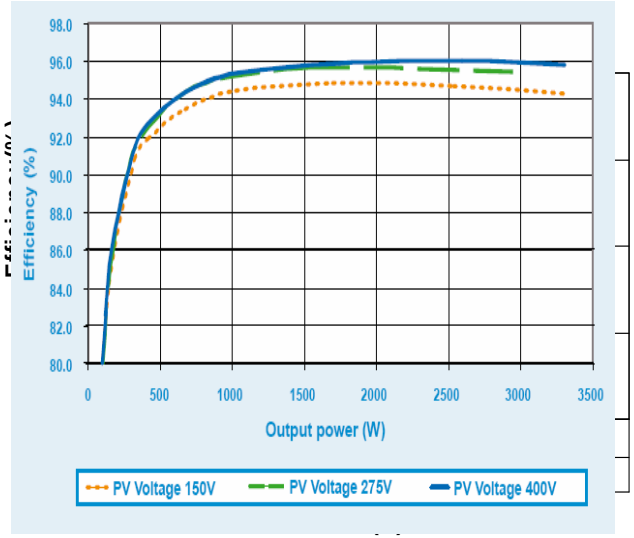

Our Mission

To provide innovative energy-saving products
for a better quality of life

THANK YOU

WELCOME TO VISIT US

Delta Confidential