SY8205

High Efficiency Fast Response，5A, 30V Input Synchronous Step Down Regulator

General Description

The SY8205 develops a high efficiency synchronous step down DC/DC converter capable of delivering 5A output current. The SY8205 operates over a wide input voltage range from 4.5V to 30V and integrates main switch and synchronous switch with very low $R_{DS(ON)}$ to minimize the conduction loss.

The SY8205 adopts the instant PWM architecture to achieve fast transient responses for high step down applications and high efficiency at light loads. In addition, it operates at pseudo-constant frequency of 500kHz under continuous conduction mode to minimize the size of inductor and capacitor.

Ordering Information

SY8205 □(□□)□

- Temperature Code
- Package Code
- Optional Spec Code

Ordering Number	Package type	Note
SY8205DNC	DFN4×3-12	--
SY8205FCC	SO8E	--

Features

- Low $R_{DS(ON)}$ for Internal Switches (Top/Bottom): 70 mΩ /40 mΩ
- 4.5-30V Input Voltage Range
- Instant PWM Architecture to Achieve Fast Transient Responses
- External Soft-start Limits the Inrush Current
- Pseudo-constant Frequency: 500kHz at Heavy Loads
- 5A Continuous, 6A Peak Load Current Capability
- 1.5% 0.6V Reference
- Output Over Current Limit
- Output Short Circuit Protection with Current Fold Back
- Thermal Shutdown and Auto Recovery
- RoHS Compliant and Halogen Free
- Compact Package: DFN4×3-12/SO8E

Applications

- LCD-TV
- SetTop Box
- Notebook
- Storage
- High Power AP Router
- Networking

Typical Applications

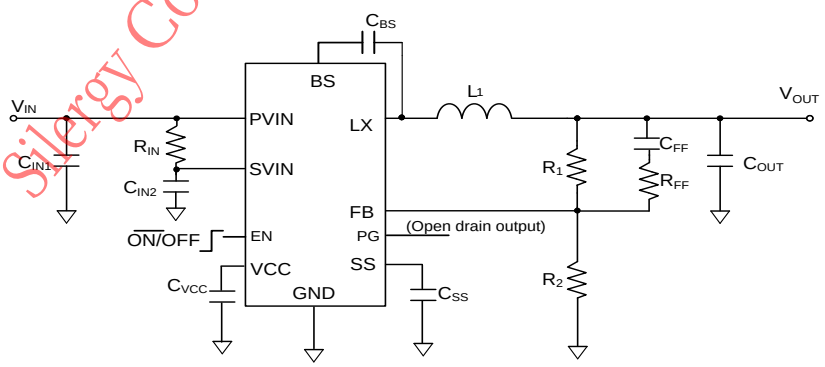

Figure1. Schematic Diagram (SY8205DNC)

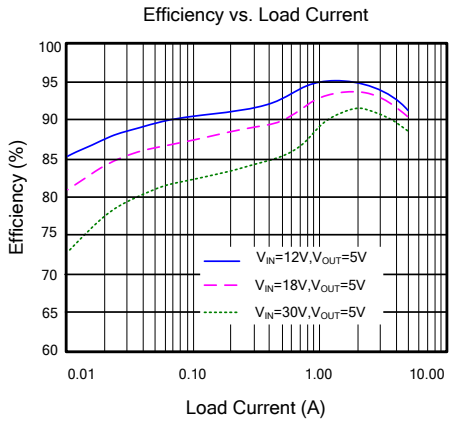

Figure2. Efficiency vs. Load Current (SY8205DNC)

Silergy Confidential-For芯导小芯

© 2019 Silergy Corp. All Rights Reserved.

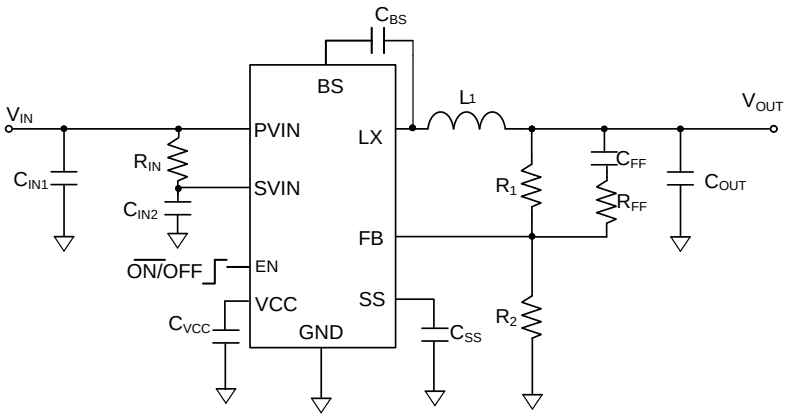

Figure3. Schematic Diagram (SY8205FCC)

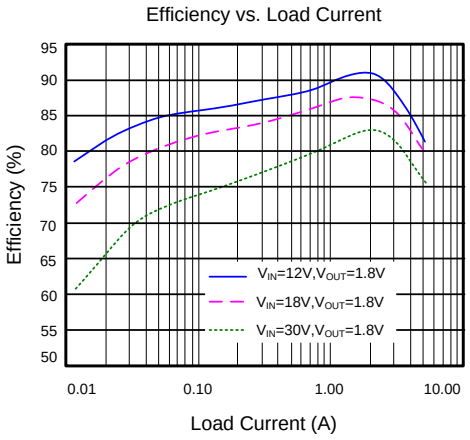

Figure4. Efficiency vs. Load Current (SY8205FCC)

Silergy Confidential-For 半导小芯

© 2019 Silergy Corp. All Rights Reserved.

Pinout (top view)

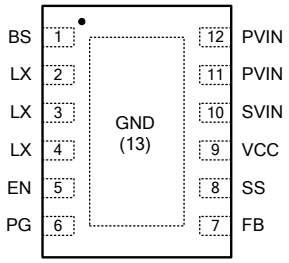

(DFN4×3-12)

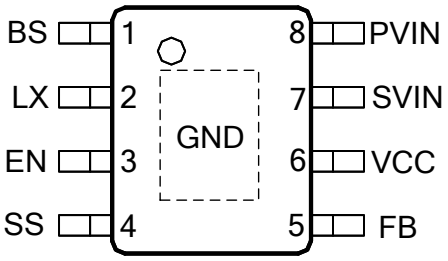

(SO8E)

Top Mark: ADS***xyz*** for SY8205DNC (Device code: ADS, ***x=year code, y=week code, z= lot number code***)
AHH***xyz*** for SY8205FCC (Device code: AHH, ***x=year code, y=week code, z= lot number code***)

Pin Name	DFN4x3-12	SO8E	Pin Description
BS	1	1	Boot-strap pin. Supply high side gate driver. Decouple this pin to the LX pin with a 0.1μF ceramic capacitor.
LX	2,3,4	2	Inductor pin. Connect this pin to the switching node of the inductor.
EN	5	3	Enable control. The device has an accurate 1.2V rising threshold that will allow the user to program the accurate turn-on delay by adding an RC before the EN pin.
PG	6	/	Power good Indicator. Low output if the output is within 90% of regulation voltage; Open-drain output otherwise.
FB	7	5	Output feedback pin. Connect this pin to the center point of the output resistor divider (as shown in Figure 1) to program the output voltage: $V_{OUT}=0.6\times(1+R_1/R_2)$
SS	8	4	Soft-start programming pin. Connect a capacitor from this pin to the ground to program the soft-start time. $t_{SS}=Css\times0.6V/10\mu A$
VCC	9	6	Internal 3.3V LDO output. Power supply for internal analog circuits and driving circuit. Add a 1μF bypass capacitor to the GND.
SVIN	10	7	Analog supply input. Bypass a 1μF capacitor to the ground.
PVIN	11,12	8	Power supply input. Decouple this pin to GND pin with at least a 10μF ceramic capacitor.
GND	Exposed Paddle	Exposed Paddle	Ground pin.

Silergy Confidential-For 半导体

© 2019 Silergy Corp. All Rights Reserved.

Function Block

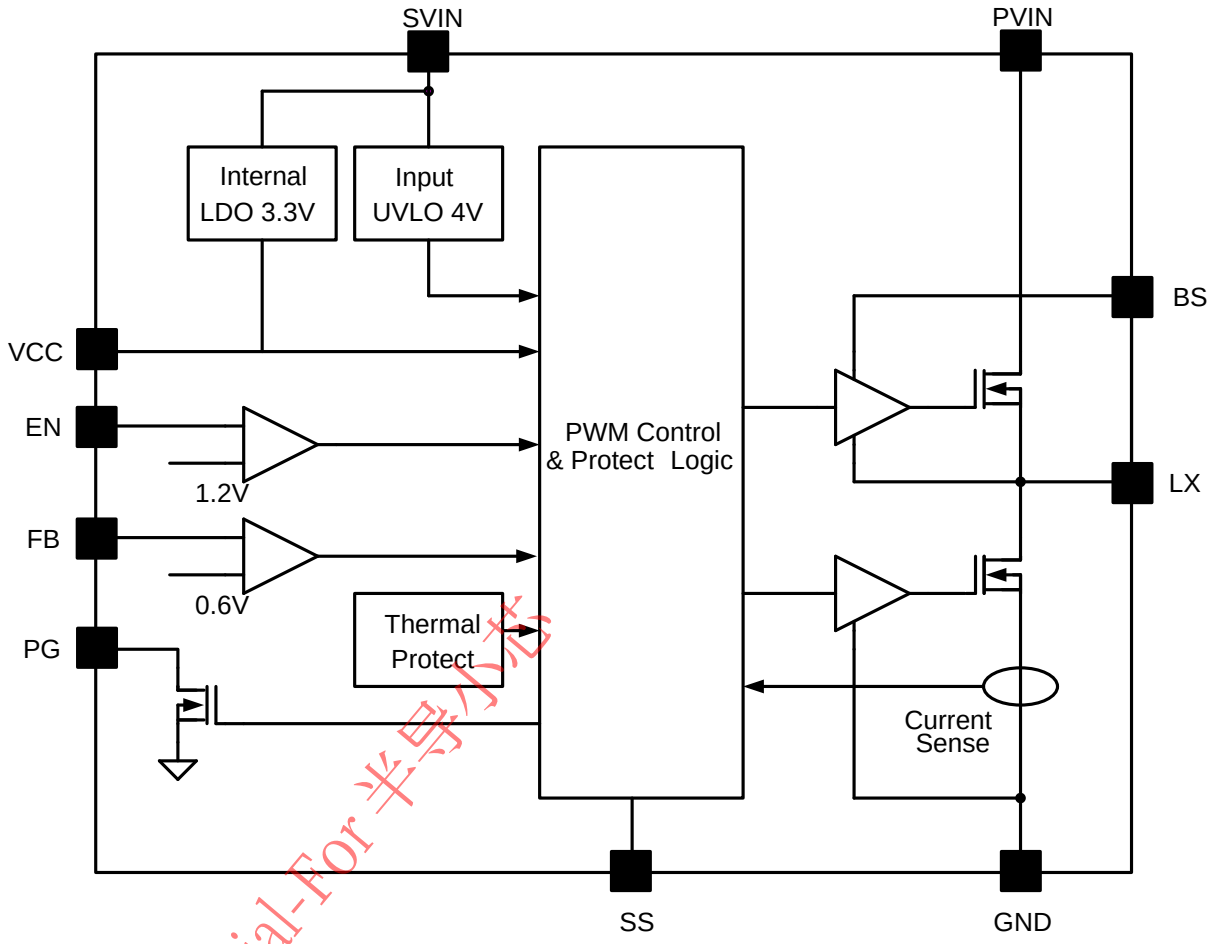

Figure5. Block Diagram

Silergy Confidential-For 半导小芯

Absolute Maximum Ratings (Note 1)

PVIN, SVIN, LX, BS, EN, PG ---------- 33V
VCC, FB, SS, BS-LX ---------- 4V
Power Dissipation, P_D @ T_A = 25 ℃, DFN4×3-12/SO8E ---------- 2.8/3.3W
Package Thermal Resistance (Note 2)
θ_{JA} ---------- 36/30 ℃/W
θ_{JC} ---------- 18 ℃/10 ℃/W
Junction Temperature Range ---------- 150 ℃
Lead Temperature (Soldering, 10 sec.) ---------- 260 ℃
Storage Temperature Range ---------- -65 ℃ to 150 ℃
Dynamic LX voltage in 10ns duration----------IN+3V to GND-4V

Recommended Operating Conditions (Note 3)

Supply Input Voltage ---------- 4.5V to 30V
Junction Temperature Range ---------- -40 ℃ to 125 ℃
Ambient Temperature Range ---------- -40 ℃ to 85 ℃

© 2019 Silergy Corp. All Rights Reserved.

Electrical Characteristics

(V_{IN} = 12V, V_{OUT} = 5V, C_{OUT} = 47μF, T_A = 25 ℃, I_{OUT} = 1A unless otherwise specified)

Parameter	Symbol	Test Conditions	Min	Typ	Max	Unit
Input Voltage Range	V_{IN}		4.5		30	V
Quiescent Current	I_Q	I_{OUT}=0, V_{FB}=V_{REF} ×105%		200		μA
Shutdown Current	I_{SHDN}	EN=0		5	10	μA
Feedback Reference Voltage	V_{REF}		0.591	0.6	0.609	V
FB Input Current	I_{FB}	V_{FB}=V_{CC}	-50		50	nA
Top FET RON	$R_{DS(ON)1}$			70		mΩ
Bottom FET RON	$R_{DS(ON)2}$			40		mΩ
Bottom FET Current Limit	I_{LIM}		5			A
EN Falling Threshold	V_{ENL}		1.1	1.2	1.3	V
EN Threshold Hysteresis	$V_{EN,HYS}$			0.1		V
Input UVLO Threshold	V_{UVLO}				4	V
UVLO Hysteresis	V_{HYS}			0.2		V
Oscillator Frequency	f_{OSC}	I_{OUT}=200mA		500		kHz
Min ON Time				80		ns
Min OFF Time				120		ns
Internal LDO Output	V_{VCC}	V_{IN}=4V	3.2	3.3	3.4	V
Thermal Shutdown Temperature	T_{SD}			160		℃
Thermal Shutdown Hysteresis	$T_{SD,HYS}$			20		℃

Note 1: Stresses beyond the "Absolute Maximum Ratings" may cause permanent damage to the device. These are stress ratings only. Functional operation of the device at these or any other conditions beyond those indicated in the operational sections of the specification is not implied. Exposure to absolute maximum rating conditions for extended periods may affect device reliability.

Note 2: θ_{JA} is measured in the natural convection at T_A = 25 ℃ on a low effective single layer thermal conductivity test board of JEDEC 51-3 thermal measurement standard. Paddle of DFN3x3-12/SO8E packages is the case position for θ_{JC} measurement.

Note 3: The device is not guaranteed to function outside its operating conditions.

Silergy Confidential-For 华强小芯

© 2019 Silergy Corp. All Rights Reserved.

DFN4×3-12 Package Outline & PCB Layout

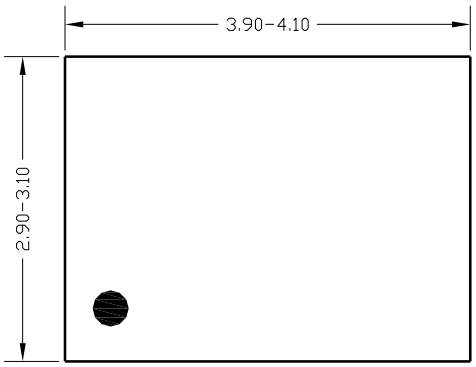

Top View

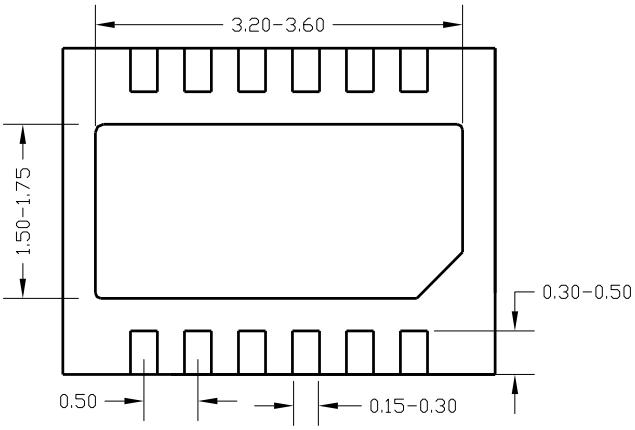

Bottom View

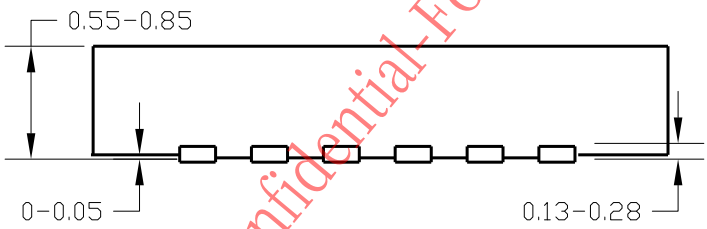

Side View

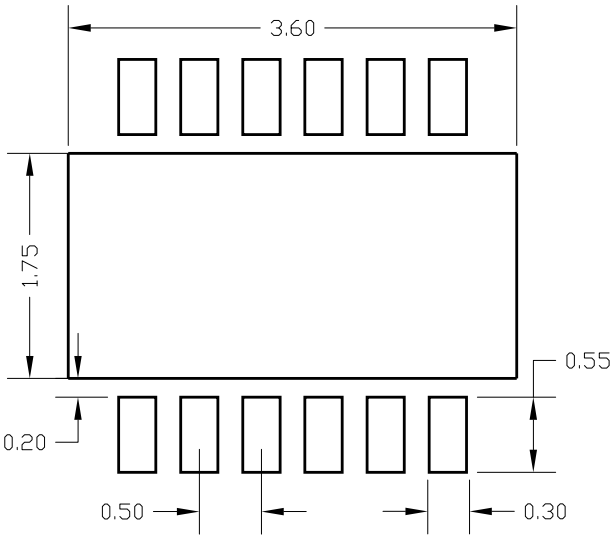

PCB layout (Recommended)

Silergy Confidential-For 半导小芯

Notes: **All dimension in millimeter and exclude mold flash & metal burr**

© 2019 Silergy Corp. All Rights Reserved.

SO8E Package Outline & PCB Layout

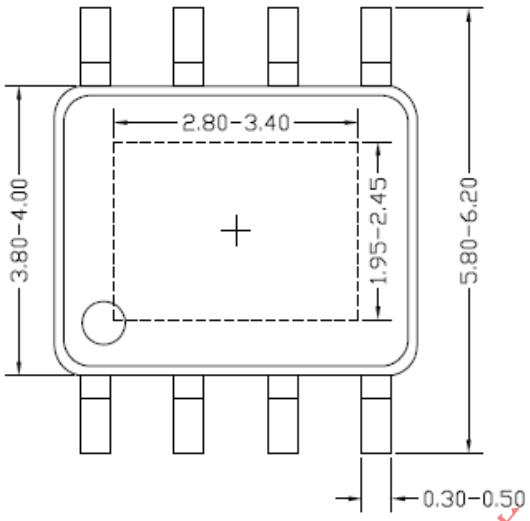

Top view

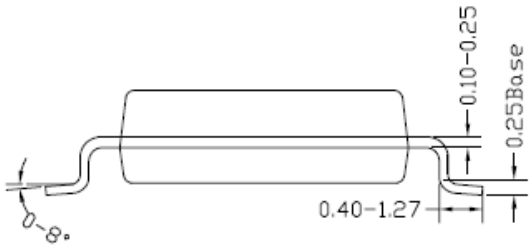

Side view

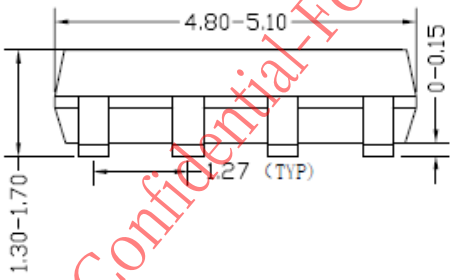

Front view

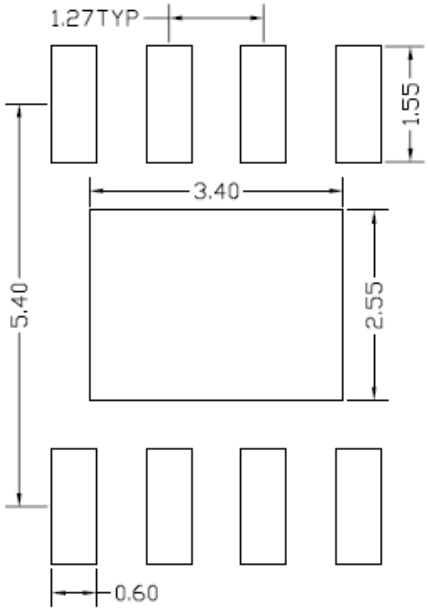

Recommended PCB layout (Reference Only)

Silergy Confidential-For 半导小芯

Notes: **All dimension in millimeter and exclude mold flash & metal burr.**

© 2019 Silergy Corp. All Rights Reserved.

Taping & Reel Specification

1. Taping orientation

SOP8-EP

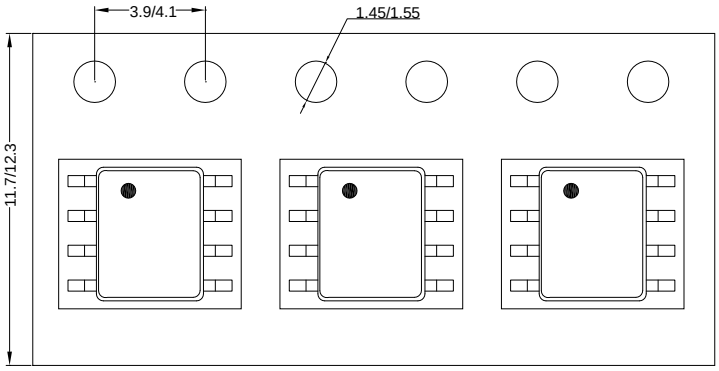

Feeding direction →

DFN4x3 (DFN4030)

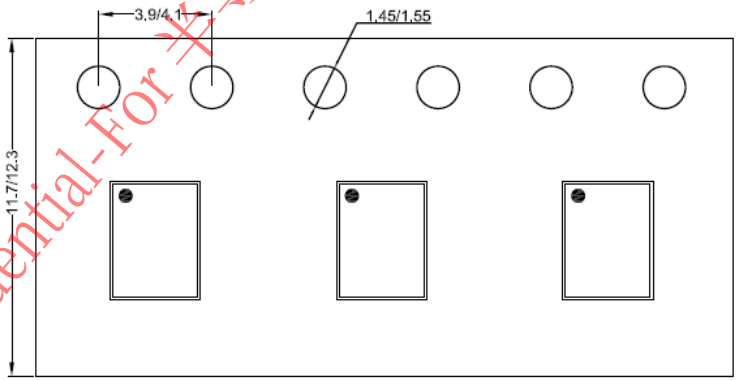

Feeding direction →

Silergy Confidential-For 半导小芯

© 2019 Silergy Corp. All Rights Reserved.

2.Carrier Tape & Reel specification for packages

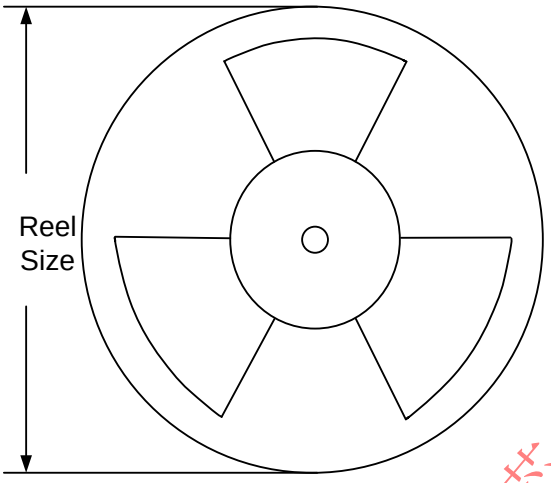

Package types	Tape width (mm)	Pocket pitch(mm)	Reel size (Inch)	Trailer length(mm)	Leader length (mm)	Qty per reel
SOP8E	12	8	13"	400	400	2500
DFN4x3	12	8	13"	400	400	5000

3. Others: NA

Silergy Confidential-For 半导小芯

© 2019 Silergy Corp. All Rights Reserved.