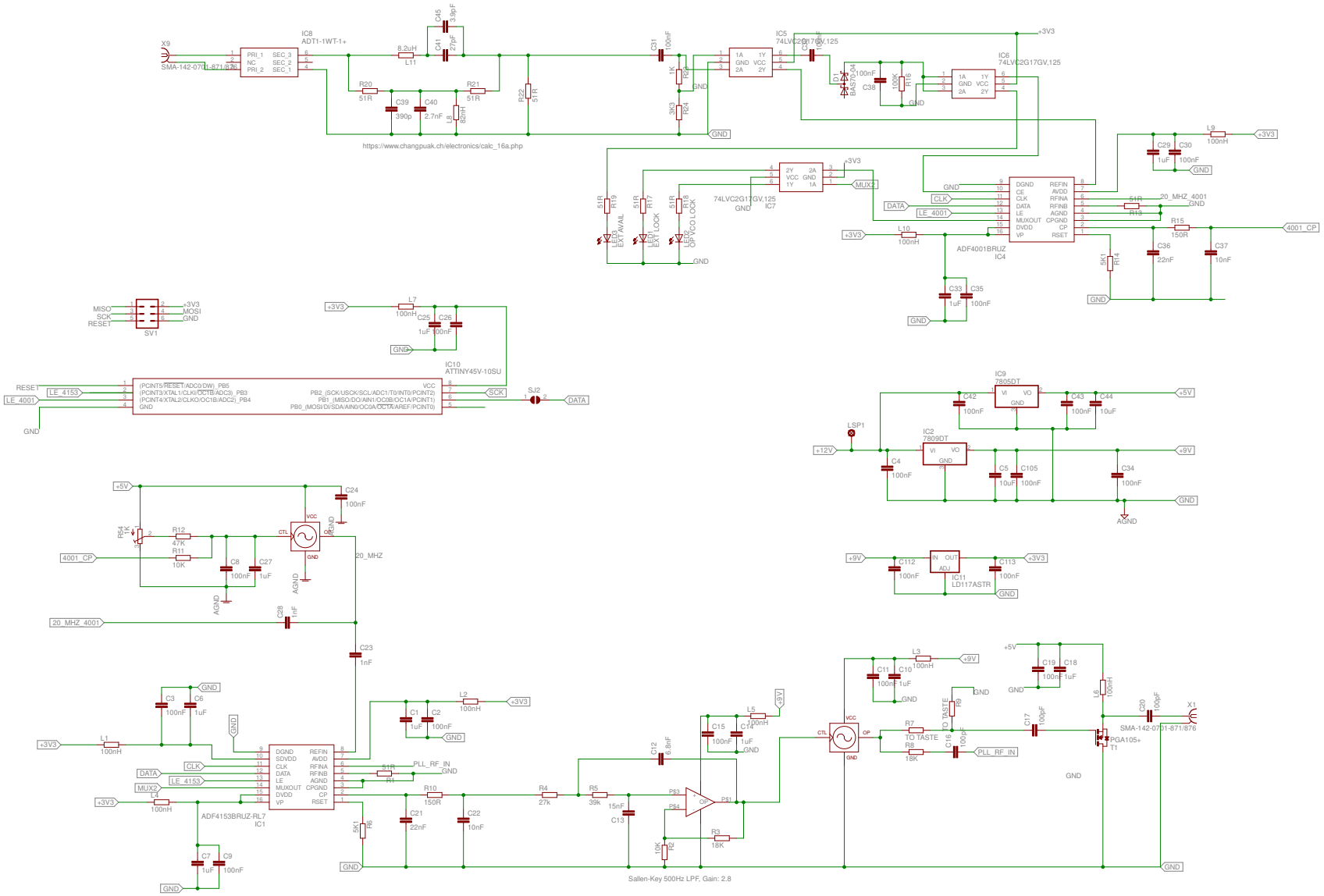

4001_4153_LO_V2	
Date: 25/11/2022 17:20:43	Sheet 1/1
Rev:	

(c) Robin Ssemeti G1YFG 2020

This design is licensed under a Creative Commons Attribution-ShareAlike 3.0 Unported License: http://creativecommons.org/licenses/by-sa/3.0/