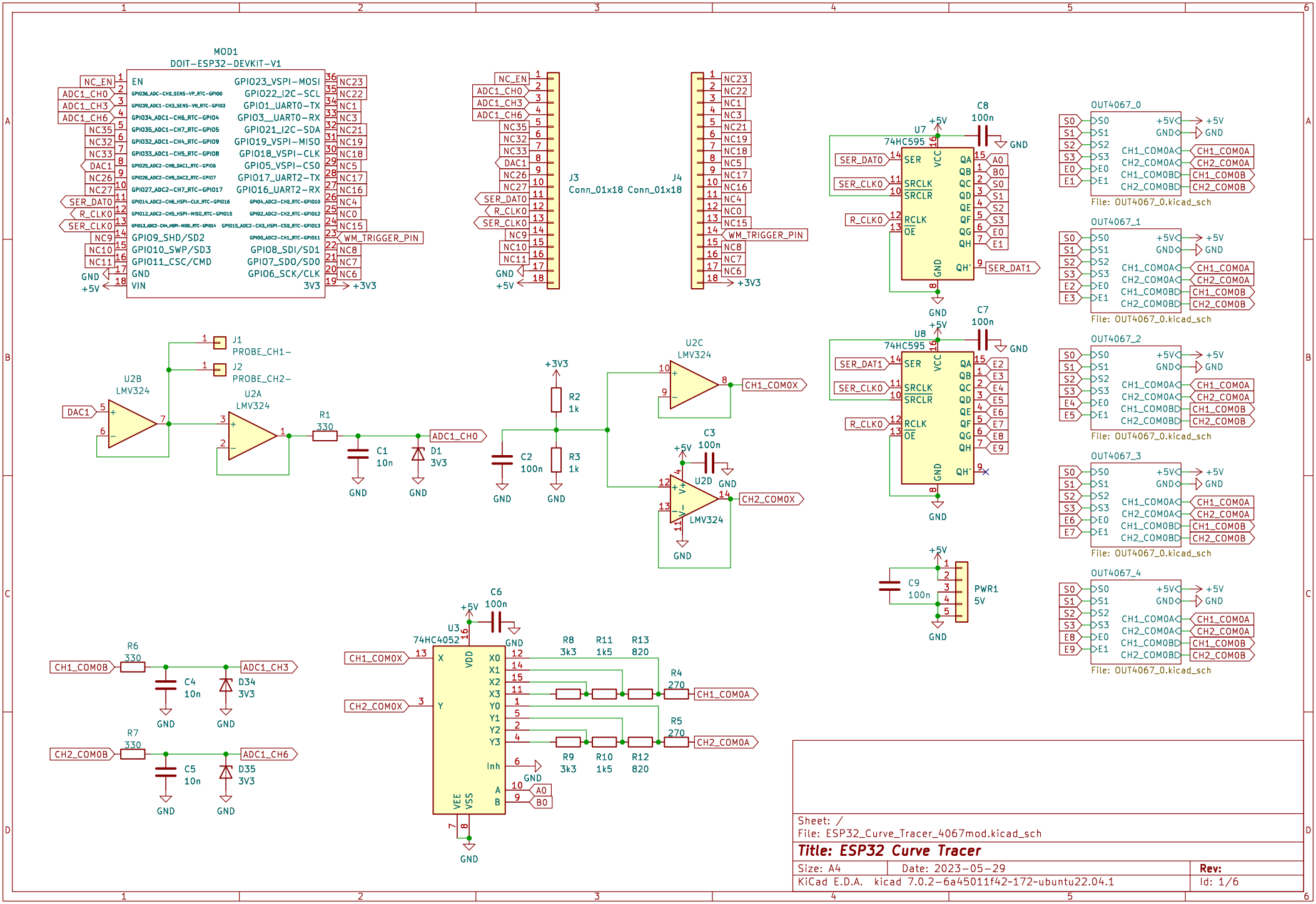

Sheet: /
File: ESP32_Curve_Tracer_4067mod.kicad_sch

Title: ESP32 Curve Tracer

Size: A4	Date: 2023-05-29	Rev:
KiCad E.D.A. kicad 7.0.2-6a45011f42~172~ubuntu22.04.1		Id: 1/6

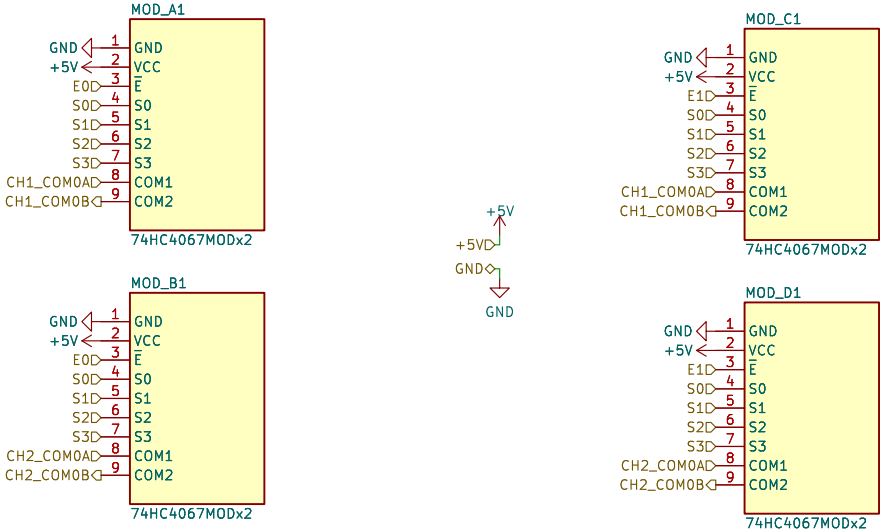

Sheet: /OUT4067_0/
File: OUT4067_0.kicad_sch

Title:

Size: A4	Date:	**Rev:**
KiCad E.D.A. kicad 7.0.2-6a45011f42~172~ubuntu22.04.1		Id: 2/6

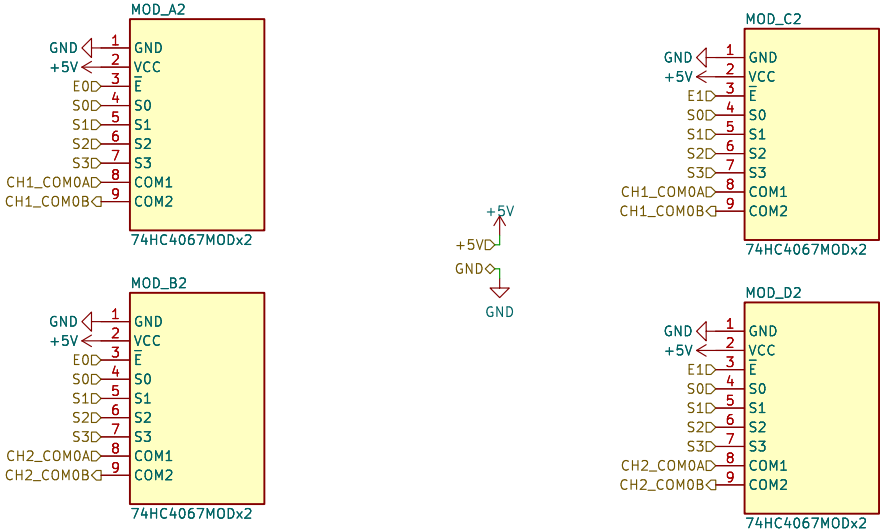

Sheet: /OUT4067_1/
File: OUT4067_0.kicad_sch

Title:

Size: A4	Date:	**Rev:**
KiCad E.D.A. kicad 7.0.2-6a45011f42~172~ubuntu22.04.1		Id: 3/6

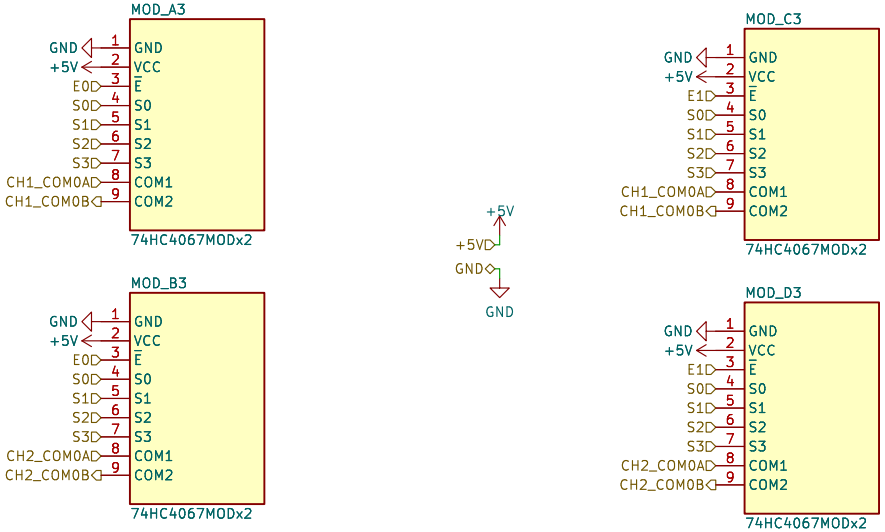

Sheet: /OUT4067_2/
File: OUT4067_0.kicad_sch

Title:

Size: A4	Date:	**Rev:**
KiCad E.D.A. kicad 7.0.2-6a45011f42~172~ubuntu22.04.1		Id: 4/6

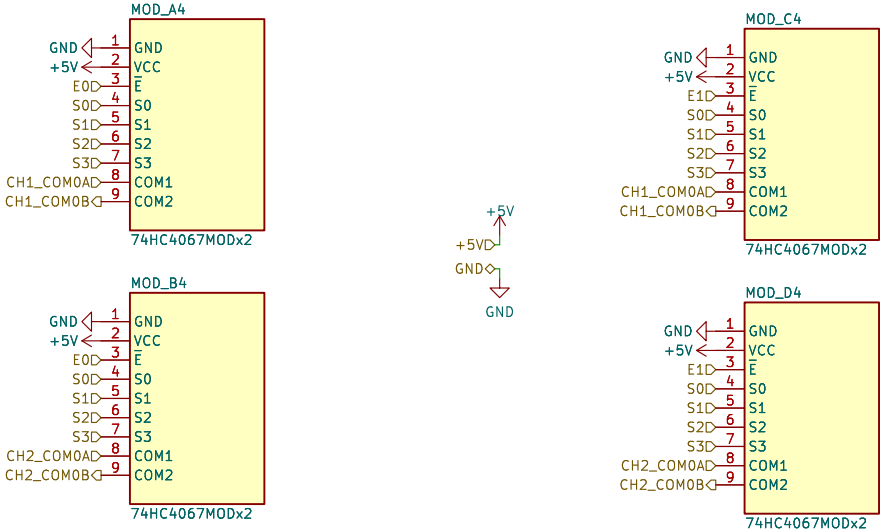

Sheet: /OUT4067_3/
File: OUT4067_0.kicad_sch

Title:

Size: A4	Date:	**Rev:**
KiCad E.D.A. kicad 7.0.2-6a45011f42~172~ubuntu22.04.1		Id: 5/6

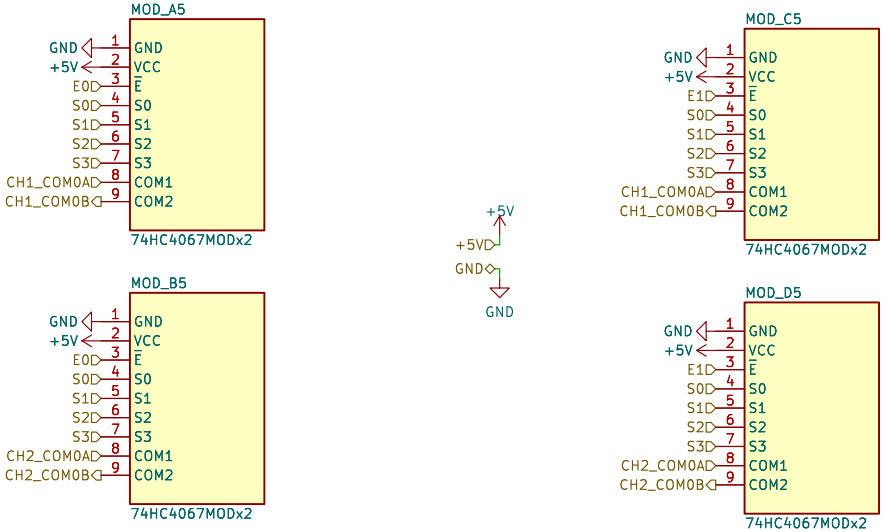

Sheet: /OUT4067_4/
File: OUT4067_0.kicad_sch

Title:

Size: A4	Date:	**Rev:**
KiCad E.D.A. kicad 7.0.2-6a45011f42~172~ubuntu22.04.1		Id: 6/6