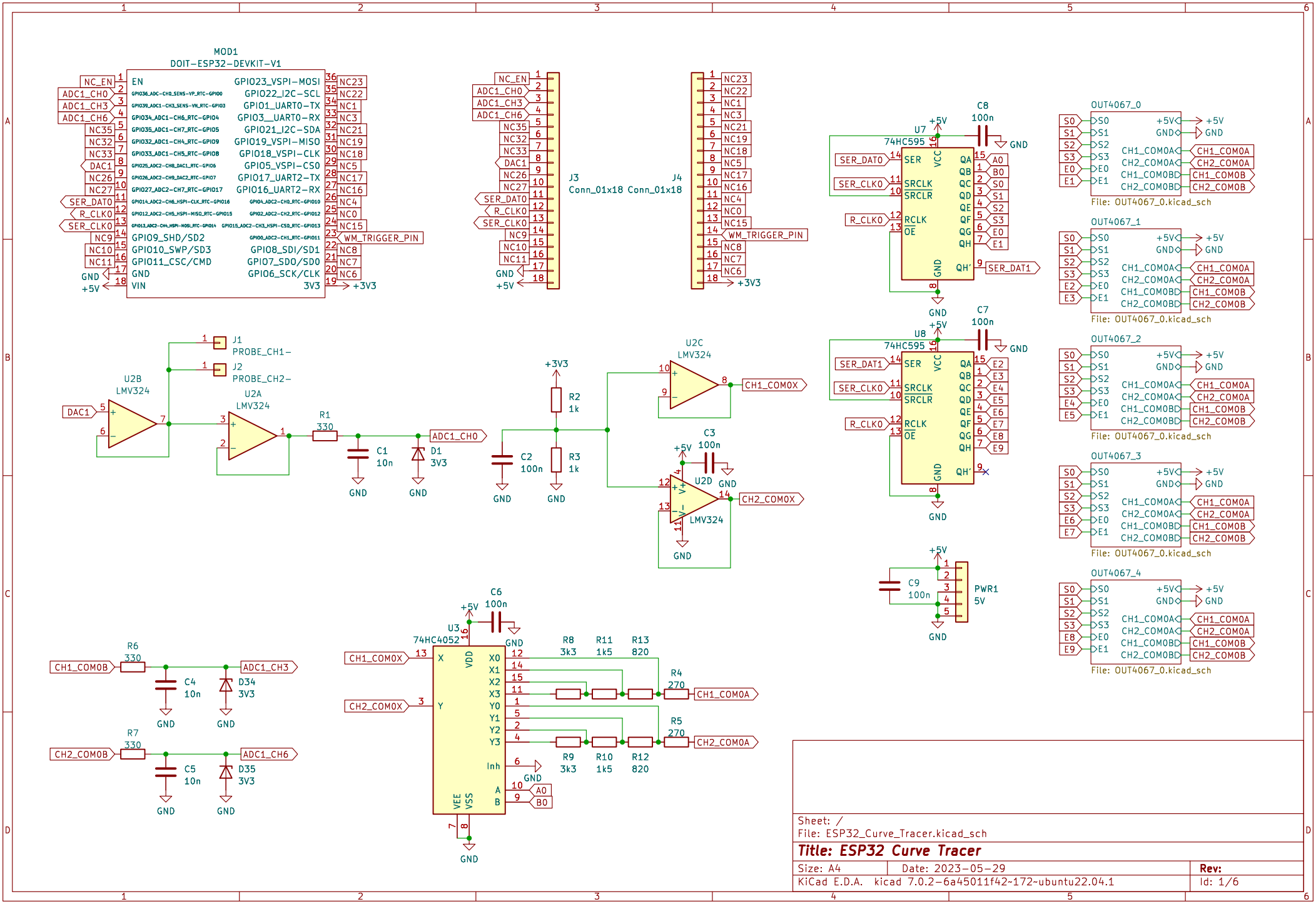
MOD1
DOIT-ESP32-DEVKIT-V1
EN
GPIO36_ADC-CH0_SENS-VP_RTC-GPIO0
GPIO39_ADC1-CH3_SENS-VN_RTC-GPIO3
GPIO34_ADC1-CH6_RTC-GPIO4
GPIO35_ADC1-CH7_RTC-GPIO5
GPIO32_ADC1-CH4_RTC-GPIO9
GPIO33_ADC1-CH5_RTC-GPIO8
GPIO25_ADC2-CH8_DAC1_RTC-GPIO6
GPIO26_ADC2-CH9_DAC2_RTC-GPIO7
GPIO27_ADC2-CH7_RTC-GPIO17
GPIO14_ADC2-CH6_HSPI-CLK_RTC-GPIO16
GPIO12_ADC2-CH5_HSPI-MISO_RTC-GPIO15
GPIO13_ADC2-CH4_HSPI-MOSI_RTC-GPIO14
GPIO9_SHD/SD2
GPIO10_SWP/SD3
GPIO11_CSC/CMD
GND
VIN
GPIO23_VSPI-MOSI
GPIO22_I2C-SCL
GPIO1_UART0-TX
GPIO3__UART0-RX
GPIO21_I2C-SDA
GPIO19_VSPI-MISO
GPIO18_VSPI-CLK
GPIO5_VSPI-CS0
GPIO17_UART2-TX
GPIO16_UART2-RX
GPIO4_ADC2-CH0_RTC-GPIO10
GPIO2_ADC2-CH2_RTC-GPIO12
GPIO15_ADC2-CH3_HSPI-CS0_RTC-GPIO13
GPIO0_ADC2-CH1_RTC-GPIO11
GPIO8_SDI/SD1
GPIO7_SDO/SD0
GPIO6_SCK/CLK
3V3
NC_EN
ADC1_CH0
ADC1_CH3
ADC1_CH6
NC35
NC32
NC33
DAC1
NC26
NC27
SER_DAT0
R_CLK0
SER_CLK0
NC9
NC10
NC11
NC23
NC22
NC1
NC3
NC21
NC19
NC18
NC5
NC17
NC16
NC4
NC0
NC15
WM_TRIGGER_PIN
NC8
NC7
NC6
+3V3
J3
Conn_01x18
J4
Conn_01x18
U7
74HC595
SER
SRCLK
SRCLR
RCLK
OE
VCC
GND
QA
QB
QC
QD
QE
QF
QG
QH
QH'
A0
B0
S0
S1
S2
S3
E0
E1
E2
E3
E4
E5
E6
E7
E8
E9
SER_DAT1
C8
100n
+5V
U8
C7
OUT4067_0
OUT4067_1
OUT4067_2
OUT4067_3
OUT4067_4
CH1_COM0A
CH2_COM0A
CH1_COM0B
CH2_COM0B
File: OUT4067_0.kicad_sch
J1
PROBE_CH1-
J2
PROBE_CH2-
U2B
LMV324
U2A
LMV324
R1
330
C1
10n
D1
3V3
ADC1_CH0
R2
1k
R3
1k
C2
100n
U2C
LMV324
CH1_COM0X
C3
100n
U2D
LMV324
CH2_COM0X
C9
100n
PWR1
5V
R6
330
CH1_COM0B
ADC1_CH3
C4
10n
D34
3V3
R7
330
CH2_COM0B
ADC1_CH6
C5
10n
D35
3V3
C6
100n
U3
74HC4052
X
Y
VDD
VEE
VSS
Inh
X0
X1
X2
X3
Y0
Y1
Y2
Y3
R8
3k3
R11
1k5
R13
820
R4
270
R5
270
R9
3k3
R10
1k5
R12
820
Sheet: /
File: ESP32_Curve_Tracer.kicad_sch
Title: ESP32 Curve Tracer
Size: A4
Date: 2023-05-29
Rev:
KiCad E.D.A. kicad 7.0.2-6a45011f42~172~ubuntu22.04.1
Id: 1/6