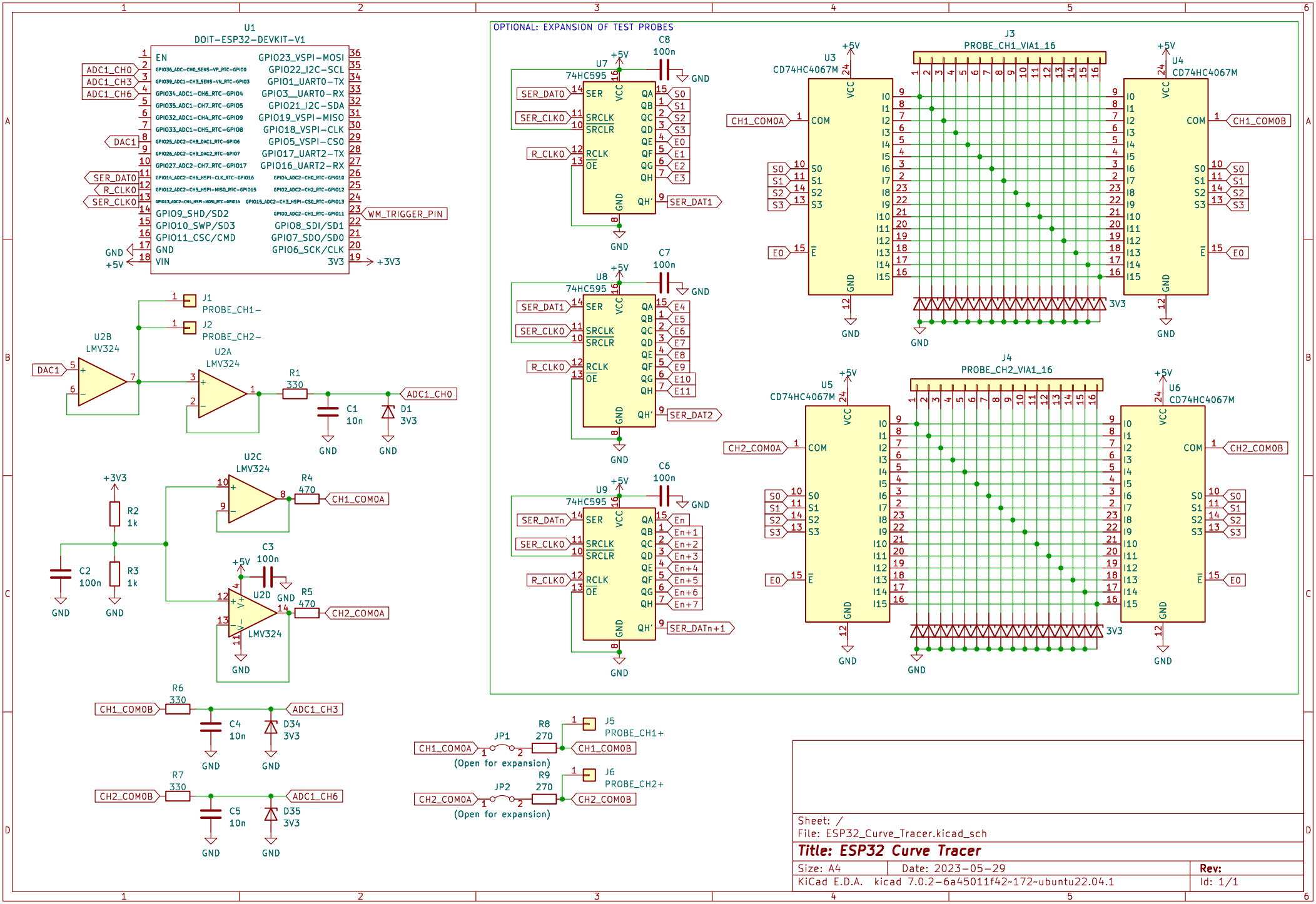

Sheet: /
File: ESP32_Curve_Tracer.kicad_sch

Title: ESP32 Curve Tracer

Size: A4	Date: 2023-05-29	Rev:
KiCad E.D.A. kicad 7.0.2-6a45011f42~172~ubuntu22.04.1		Id: 1/1