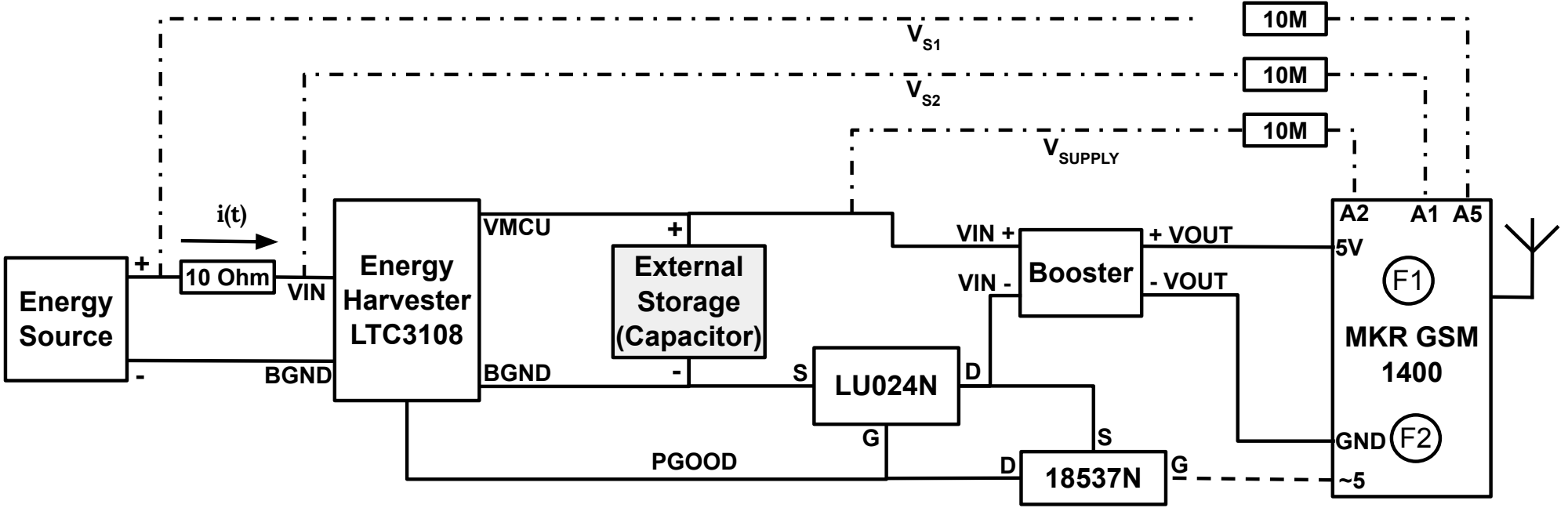

* i(t): Current flowing from N0 to N1