chipKIT™ Max32 Reference Design

Digilent chipKIT hardware files are licensed under the Creative Commons Attribution-ShareAlike license. This license allows for both personal and commercial derivative works, as long as proper credit is given to Digilent and the designs are released under the same license.

www.creativecommons.org/licenses/by-sa/3.0/

Reference designs are provided "AS IS" and "WITH ALL FAULTS". Digilent disclaims all other warranties express or implied, regarding this product, including but not limited to, any implied warranties of merchantibility or fitness for any particular application. Digilent may make changes to specifications and product descriptions at any time, without notice.

chipKIT Max32		
Copyright 2011-2014, Digilent Inc.		Engineer: NEA
SHEET: License		Author: GMA
TITLE: chipKIT Max32		Rev: E.0
Doc#: 500-202	Date: 10/21/2014	Sheet: 1/5

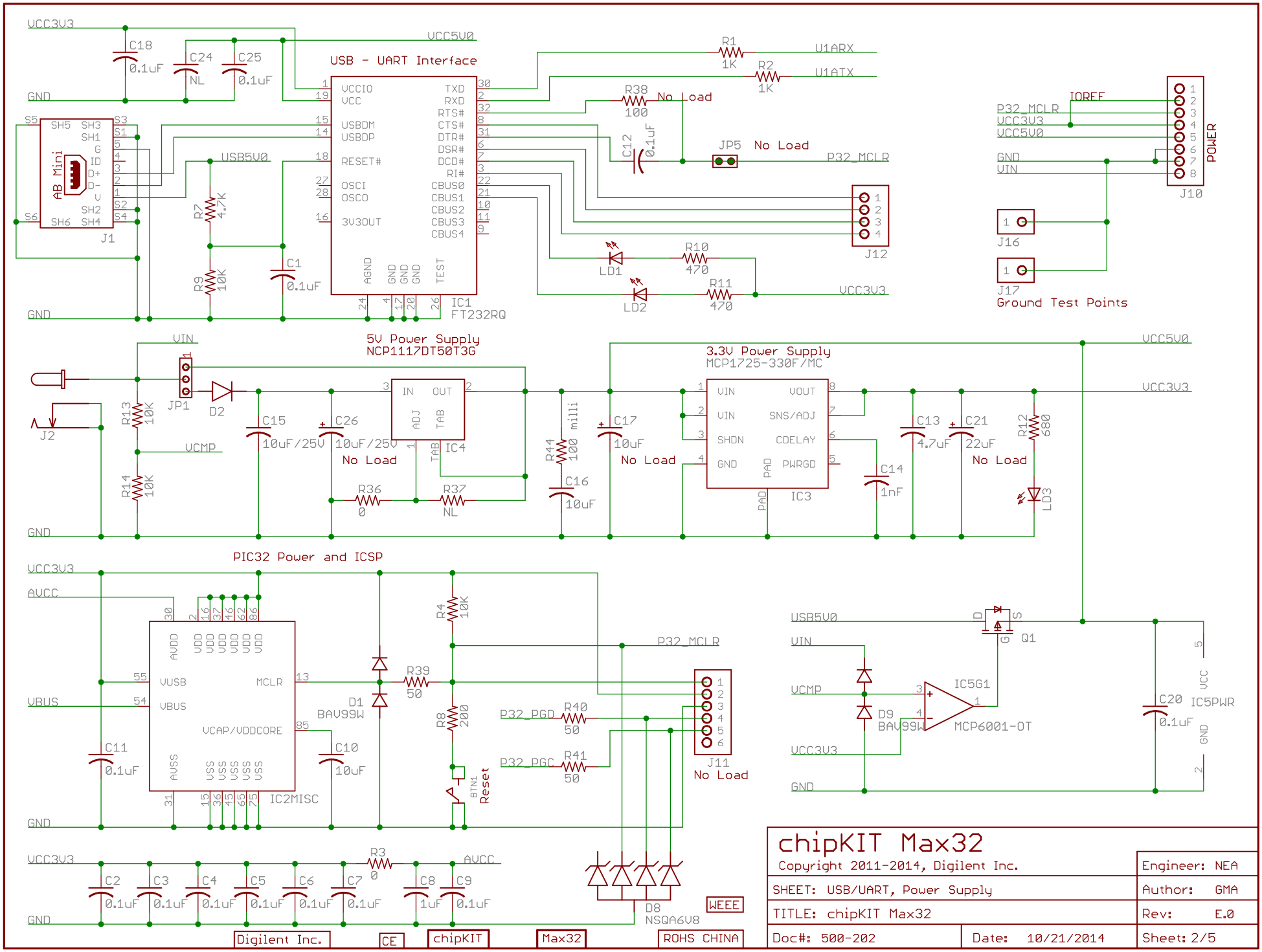

10/21/2014 1:11:56 PM f=0.97 C:\PCB Eagle\chipKIT Max32\chipKIT Max32.sch (Sheet: 2/5)

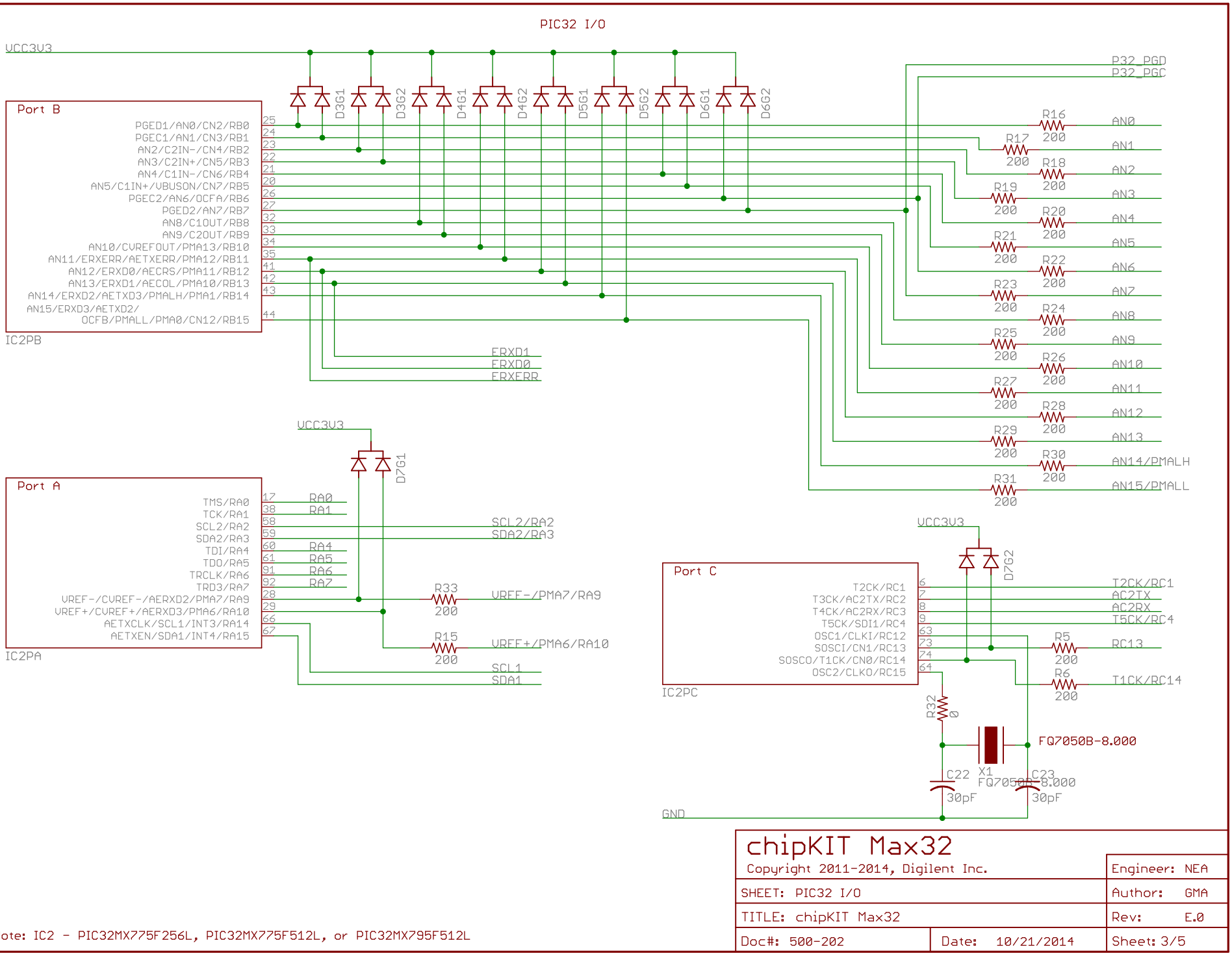
PIC32 I/O
VCC3V3
Port B
PGED1/AN0/CN2/RB0
PGEC1/AN1/CN3/RB1
AN2/C2IN-/CN4/RB2
AN3/C2IN+/CN5/RB3
AN4/C1IN-/CN6/RB4
AN5/C1IN+/VBUSON/CN7/RB5
PGEC2/AN6/OCFA/RB6
PGED2/AN7/RB7
AN8/C1OUT/RB8
AN9/C2OUT/RB9
AN10/CVREFOUT/PMA13/RB10
AN11/ERXERR/AETXERR/PMA12/RB11
AN12/ERXD0/AECRS/PMA11/RB12
AN13/ERXD1/AECOL/PMA10/RB13
AN14/ERXD2/AETXD3/PMALH/PMA1/RB14
AN15/ERXD3/AETXD2/
OCFB/PMALL/PMA0/CN12/RB15
IC2PB
D3G1
D3G2
D4G1
D4G2
D5G1
D5G2
D6G1
D6G2
P32_PGD
P32_PGC
R16 200 AN0
R17 200 AN1
R18 200 AN2
R19 200 AN3
R20 200 AN4
R21 200 AN5
R22 200 AN6
R23 200 AN7
R24 200 AN8
R25 200 AN9
R26 200 AN10
R27 200 AN11
R28 200 AN12
R29 200 AN13
R30 200 AN14/PMALH
R31 200 AN15/PMALL
ERXD1
ERXD0
ERXERR
VCC3V3
D7G1
Port A
TMS/RA0
TCK/RA1
SCL2/RA2
SDA2/RA3
TDI/RA4
TDO/RA5
TRCLK/RA6
TRD3/RA7
VREF-/CVREF-/AERXD2/PMA7/RA9
VREF+/CVREF+/AERXD3/PMA6/RA10
AETXCLK/SCL1/INT3/RA14
AETXEN/SDA1/INT4/RA15
IC2PA
RA0
RA1
RA4
RA5
RA6
RA7
SCL2/RA2
SDA2/RA3
R33 200 VREF-/PMA7/RA9
R15 200 VREF+/PMA6/RA10
SCL1
SDA1
VCC3V3
D7G2
Port C
T2CK/RC1
T3CK/AC2TX/RC2
T4CK/AC2RX/RC3
T5CK/SDI1/RC4
OSC1/CLKI/RC12
SOSCI/CN1/RC13
SOSCO/T1CK/CN0/RC14
OSC2/CLKO/RC15
IC2PC
T2CK/RC1
AC2TX
AC2RX
T5CK/RC4
R5 200 RC13
R6 200 T1CK/RC14
R32 0
FQ7050B-8.000
C22 30pF
X1
C23 30pF
GND
chipKIT Max32
Copyright 2011-2014, Digilent Inc.
Engineer: NEA
SHEET: PIC32 I/O
Author: GMA
TITLE: chipKIT Max32
Rev: E.0
Doc#: 500-202
Date: 10/21/2014
Sheet: 3/5
Note: IC2 - PIC32MX775F256L, PIC32MX775F512L, or PIC32MX795F512L

PIC32 I/O

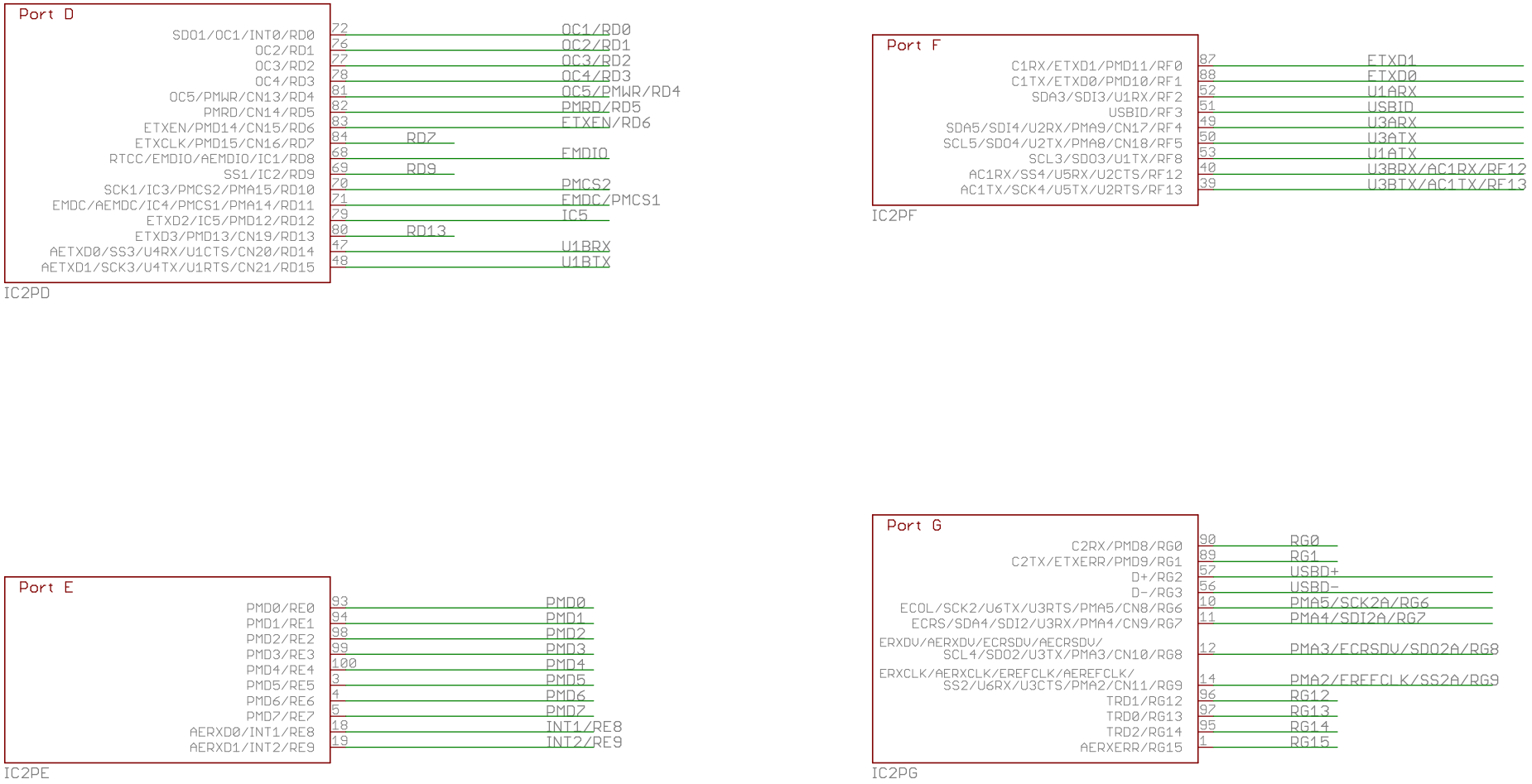

chipKIT Max32

Copyright 2011-2014, Digilent Inc.

SHEET: PIC32 I/O		Engineer: NEA
TITLE: chipKIT Max32		Author: GMA
Doc#: 500-202	Date: 10/21/2014	Rev: E.0
		Sheet: 4/5

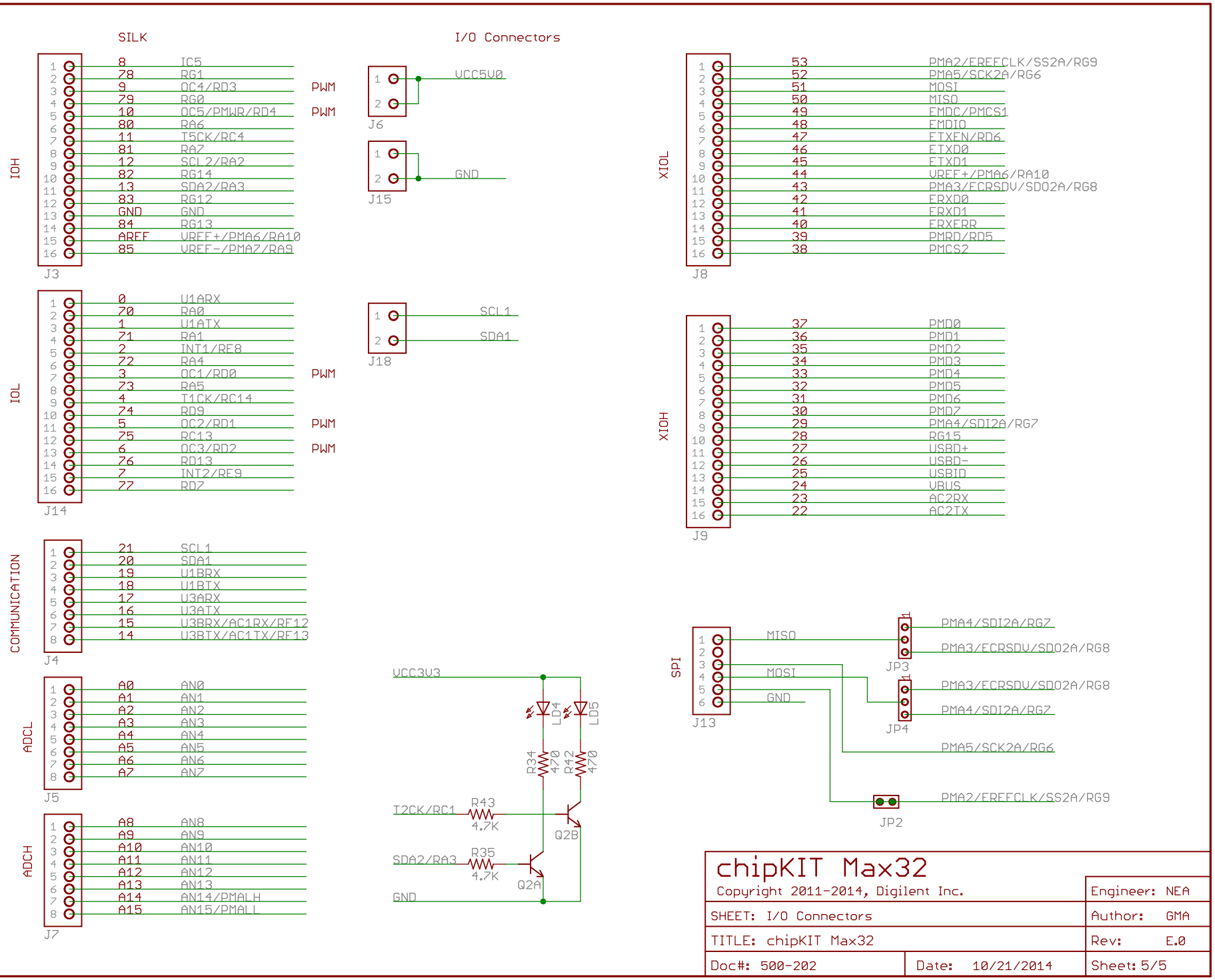
SILK
I/O Connectors
IOH
IOL
COMMUNICATION
ADCL
ADCH
J3
J14
J4
J5
J7
J6
J15
J18
J8
J9
J13
JP3
JP4
JP2
XIOL
XIOH
SPI
PWM
8 IC5
78 RG1
9 OC4/RD3
79 RG0
10 OC5/PMWR/RD4
80 RA6
11 T5CK/RC4
81 RA7
12 SCL2/RA2
82 RG14
13 SDA2/RA3
83 RG12
GND GND
84 RG13
AREF VREF+/PMA6/RA10
85 VREF-/PMA7/RA9
0 U1ARX
70 RA0
1 U1ATX
71 RA1
2 INT1/RF8
72 RA4
3 OC1/RD0
73 RA5
4 T1CK/RC14
74 RD9
5 OC2/RD1
75 RC13
6 OC3/RD2
76 RD13
7 INT2/RF9
77 RD7
21 SCL1
20 SDA1
19 U1BRX
18 U1BTX
17 U3ARX
16 U3ATX
15 U3BRX/AC1RX/RF12
14 U3BTX/AC1TX/RF13
A0 AN0
A1 AN1
A2 AN2
A3 AN3
A4 AN4
A5 AN5
A6 AN6
A7 AN7
A8 AN8
A9 AN9
A10 AN10
A11 AN11
A12 AN12
A13 AN13
A14 AN14/PMALH
A15 AN15/PMALL
VCC5V0
GND
SCL1
SDA1
53 PMA2/EREFCLK/SS2A/RG9
52 PMA5/SCK2A/RG6
51 MOSI
50 MISO
49 EMDC/PMCS1
48 EMDIO
47 ETXEN/RD6
46 ETXD0
45 ETXD1
44 VREF+/PMA6/RA10
43 PMA3/ECRSDV/SDO2A/RG8
42 ERXD0
41 ERXD1
40 ERXERR
39 PMRD/RD5
38 PMCS2
37 PMD0
36 PMD1
35 PMD2
34 PMD3
33 PMD4
32 PMD5
31 PMD6
30 PMD7
29 PMA4/SDI2A/RG7
28 RG15
27 USBD+
26 USBD-
25 USBID
24 VBUS
23 AC2RX
22 AC2TX
MISO
MOSI
GND
PMA4/SDI2A/RG7
PMA3/ECRSDV/SDO2A/RG8
PMA3/ECRSDV/SDO2A/RG8
PMA4/SDI2A/RG7
PMA5/SCK2A/RG6
PMA2/EREFCLK/SS2A/RG9
VCC3V3
LD4
LD5
R34 470
R42 470
T2CK/RC1
R43 4.7K
Q2B
SDA2/RA3
R35 4.7K
Q2A
GND
chipKIT Max32
Copyright 2011-2014, Digilent Inc.
Engineer: NEA
SHEET: I/O Connectors
Author: GMA
TITLE: chipKIT Max32
Rev: E.0
Doc#: 500-202
Date: 10/21/2014
Sheet: 5/5