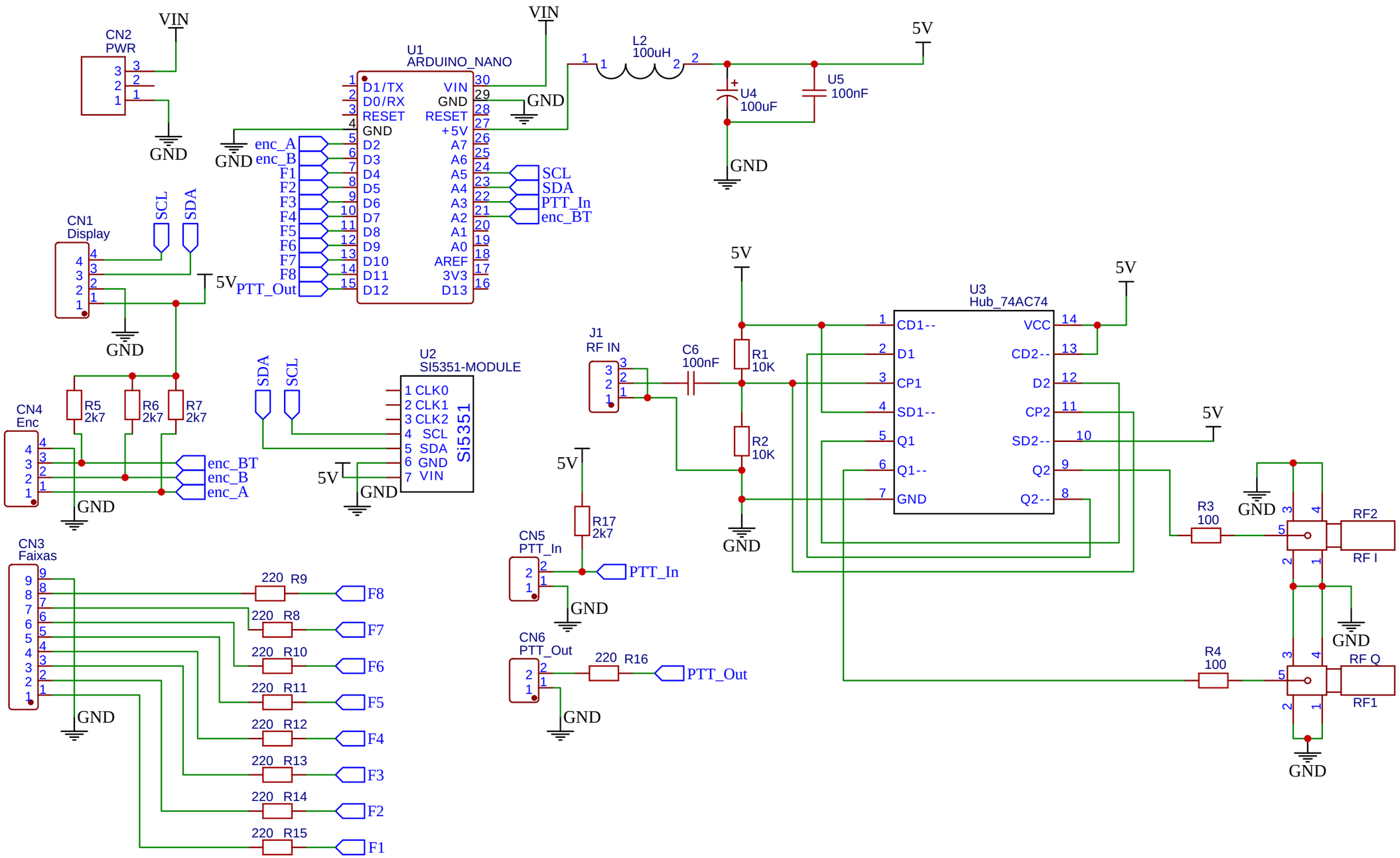

TITLE: VFO SI 5351	REV: 1.0
Company: Apotec	Sheet: 1/1
Date: 2024-06-13	Drawn By: rubenshubnerjunior2010

EasyEDA