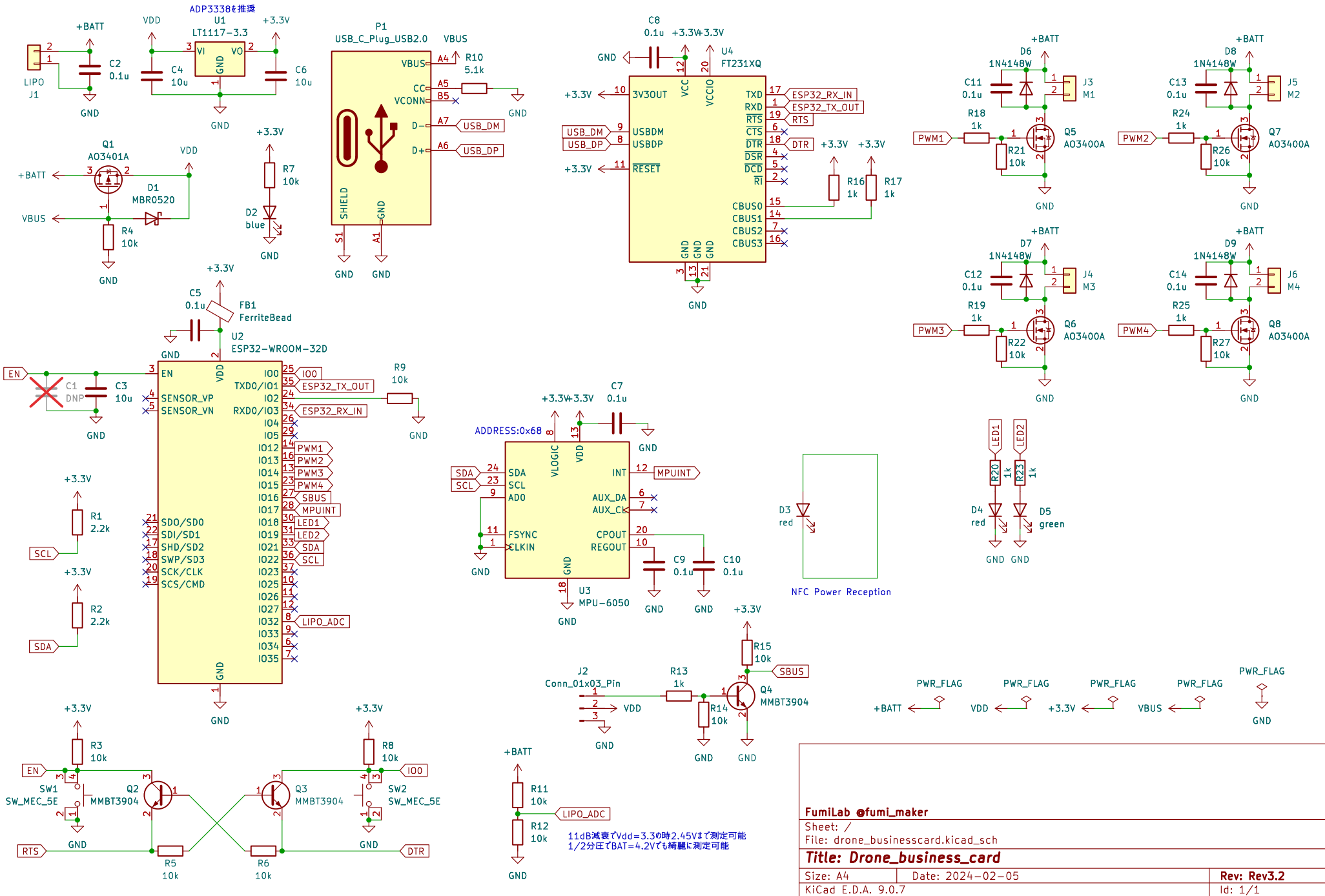

FumiLab @fumi_maker

Sheet: /

File: drone_businesscard.kicad_sch

Title: Drone_business_card

Size: A4	Date: 2024-02-05	Rev: Rev3.2
KiCad E.D.A. 9.0.7		Id: 1/1