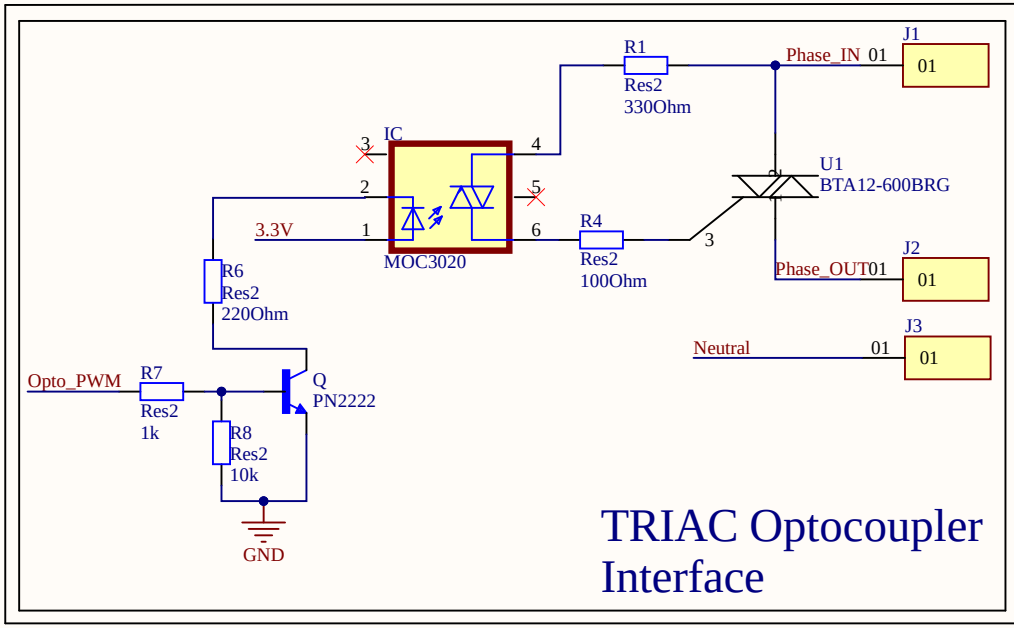

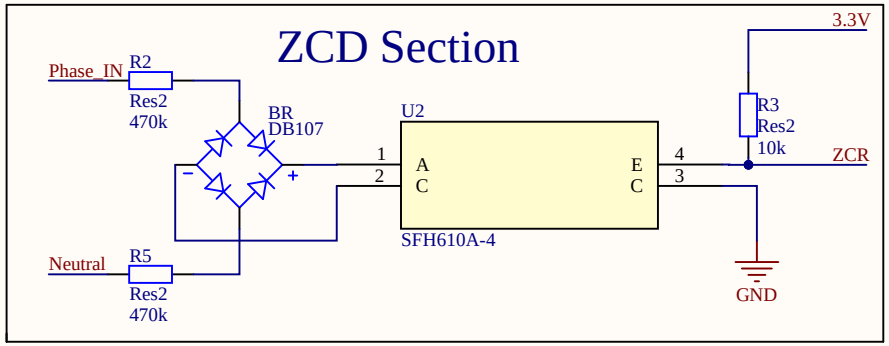

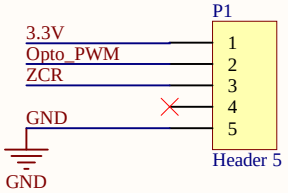

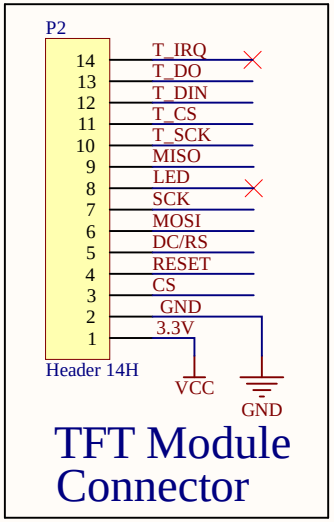

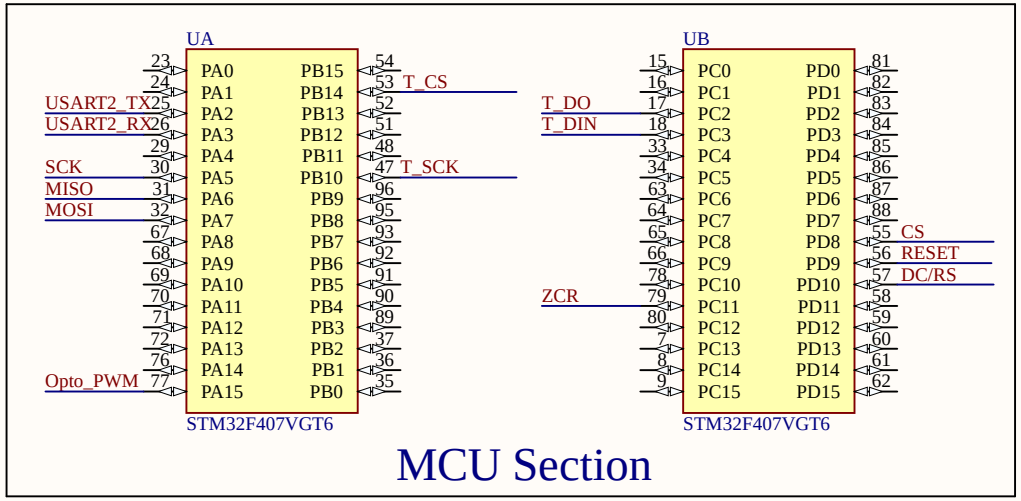

Title		
AC Dimmer		
Size: A	Number: 1	Revision: 1.2
Date: 4/28/2022		Sheet of
File: C:\Users\..\AC_Dimmer.SchDoc		Drawn By: