Rectangle Cipher

<Ciphermakers>

Department of <CS553-Cryptography>
Indian Institute of Technology Bhilai

December 6, 2021

Outline

Introduction

History and Evolution

- PRESENT was introducd at CHES'2007 with a low-cost hardware performance.
- Further, LED was introduced at CHES'2011 adding a reasonable software performance.
- Then the Serpent Block Cipher was introduced with the bit-slice technique.
- Finally, Rectangle Cipher was introduced with all better improvements from the previous ciphers.

Introduction

Rectangle Cipher is

- Lightweight Block Cipher
- Based on SP-Network
- 16 4x4 S-boxes in parallel in S-Layer
- 3 rotations composed in the P-layer
- Both Hardware and Software Friendly

Outline

Cipher Specifications

- Lightweight Block Cipher
- Bit-Slice Style
- Competetive Software Performance
- Hardware Friendly
- Very Strong Security

The Round Transformation

- AddRoundkey (ARK)
- SubColumn (SC)
- ShiftRow (SR)
- Key Schedule (KS)

Pseudo-Code-

```
GenerateRoundKeys(state):
.       for i = 0 to 24 do:
.           ARK(state, Ki)
.           SC(state)
.           SR(state)
.       ARK(state, K25)
```

AddRoundkey (AR)

It is a simple XOR operation.

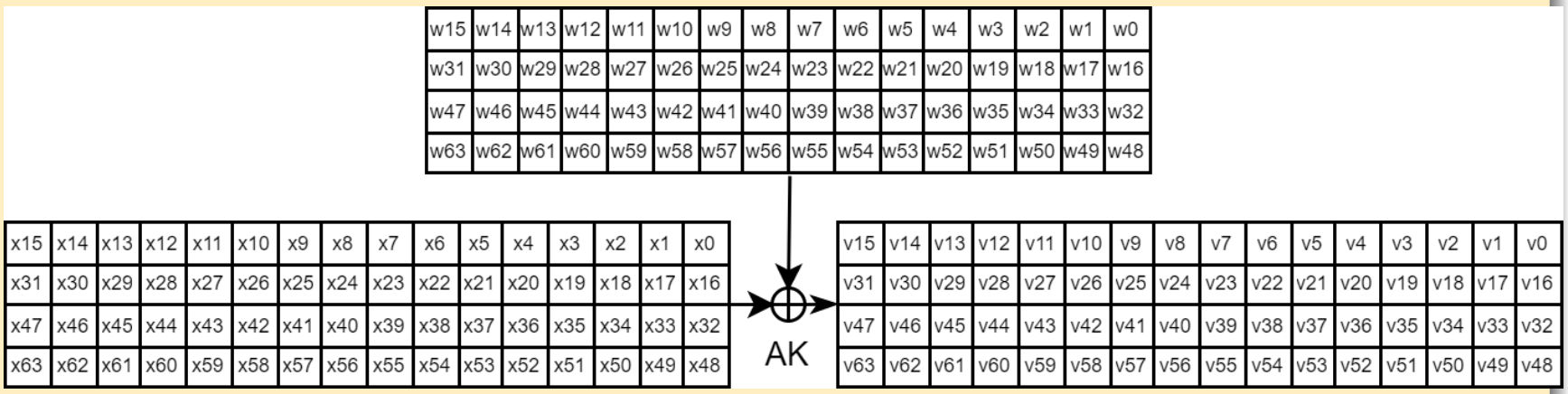

AR-Operation

SubColumn (SC)

S-Box

The S-Box S : $F_2^4 \rightarrow F_2^4$.

x	0	1	2	3	4	5	6	7	8	9	A	B	C	D	E	F
$S(x)$	6	5	C	A	1	E	7	9	B	0	3	D	8	F	4	2

Rectangle S-Box

SubColumn

It is the parallel application of S-boxes oo the 4 bits in the same column. Input- Col(j) = v3,j || v2,j || v1,j || v0,j for $0 \leq j \leq 15$
Output- S(Col(j)) = x3,j || x2,j || x1,j || x0,j.

v15	v14	v13	v12	v11	v10	v9	v8	v7	v6	v5	v4	v3	v2	v1	v0
v31	v30	v29	v28	v27	v26	v25	v24	v23	v22	v21	v20	v19	v18	v17	v16
v47	v46	v45	v44	v43	v42	v41	v40	v39	v38	v37	v36	v35	v34	v33	v32
v63	v62	v61	v60	v59	v58	v57	v56	v55	v54	v53	v52	v51	v50	v49	v48

SC →

x15	x14	x13	x12	x11	x10	x9	x8	x7	x6	x5	x4	x3	x2	x1	x0
x31	x30	x29	x28	x27	x26	x25	x24	x23	x22	x21	x20	x19	x18	x17	x16
x47	x46	x45	x44	x43	x42	x41	x40	x39	x38	x37	x36	x35	x34	x33	x32
x63	x62	x61	x60	x59	x58	x57	x56	x55	x54	x53	x52	x51	x50	x49	x48

SC-Operation

Differential Distribution Table (DDT)

16	0	0	0	0	0	0	0	0	0	0	0	0	0	0	0
0	0	0	2	0	0	4	2	0	0	0	2	0	0	4	2
0	0	0	0	0	0	2	2	2	0	2	0	2	4	0	2
0	0	0	2	0	0	2	0	2	4	2	2	2	0	0	0
0	0	0	4	0	0	0	4	0	0	0	4	0	0	0	4
0	2	0	0	4	2	0	0	4	2	0	0	0	2	0	0
0	2	4	0	2	0	0	0	0	0	0	2	2	2	0	2
0	0	4	0	2	2	0	0	0	2	0	2	2	0	0	2
0	2	0	2	0	2	0	2	0	2	0	2	0	2	0	2
0	2	0	0	0	2	4	0	0	2	0	0	0	2	4	0
0	0	0	0	0	4	2	2	2	0	2	0	2	0	0	2
0	4	0	2	0	0	2	0	2	0	2	2	2	0	0	0
0	0	0	0	4	0	0	0	4	0	4	0	0	0	4	0
0	2	0	0	0	2	0	0	0	2	4	0	0	2	4	0
0	0	4	2	2	2	0	2	0	2	0	0	2	0	0	0
0	2	4	2	2	0	0	2	0	0	0	0	2	2	0	0

DDT for Rectangle cipher S-Box

Linear Approximation Table (LAT)

8	0	0	0	0	0	0	0	0	0	0	0	0	0	0	0
0	0	0	4	0	-4	0	0	2	-2	-2	-2	-2	-2	2	-2
0	0	0	0	0	0	4	4	0	0	4	-4	0	0	0	0
0	0	0	-4	4	0	0	0	-2	2	-2	-2	-2	-2	2	-2
0	0	0	0	0	0	-4	4	0	0	0	0	0	0	4	4
0	0	-4	0	0	-4	0	0	-2	2	-2	-2	2	2	-2	2
0	0	0	0	0	0	0	0	4	4	0	0	-4	4	0	0
0	0	-4	0	-4	0	0	0	-2	2	2	2	-2	-2	2	-2
0	0	0	-4	-2	-2	2	-2	0	-4	0	0	-2	2	2	2
0	0	0	0	-2	2	2	-2	2	2	-2	-2	4	0	4	0
0	0	0	-4	-2	-2	-2	2	4	0	0	0	2	-2	-2	-2
0	0	0	0	2	-2	2	-2	2	2	2	2	0	-4	0	4
0	4	0	0	-2	2	-2	-2	0	0	0	-4	-2	-2	-2	2
0	4	4	0	-2	-2	2	2	-2	2	-2	2	0	0	0	0
0	-4	0	0	-2	2	2	2	0	0	-4	0	-2	-2	-2	2
0	4	-4	0	2	2	2	2	2	-2	-2	2	0	0	0	0

LAT for Rectangle cipher S-Box

ShiftRow (SR)

It is just a left rotation to each row.

x15	x14	x13	x12	x11	x10	x9	x8	x7	x6	x5	x4	x3	x2	x1	x0
x31	x30	x29	x28	x27	x26	x25	x24	x23	x22	x21	x20	x19	x18	x17	x16
x47	x46	x45	x44	x43	x42	x41	x40	x39	x38	x37	x36	x35	x34	x33	x32
x63	x62	x61	x60	x59	x58	x57	x56	x55	x54	x53	x52	x51	x50	x49	x48

SR →

x15	x14	x13	x12	x11	x10	x9	x8	x7	x6	x5	x4	x3	x2	x1	x0
x30	x29	x28	x27	x26	x25	x24	x23	x22	x21	x20	x19	x18	x17	x16	x31
x35	x34	x33	x32	x47	x46	x45	x44	x43	x42	x41	x40	x39	x38	x37	x36
x50	x49	x48	x63	x62	x61	x60	x59	x58	x57	x56	x55	x54	x53	x52	x51

SR-Operation

Key Schedule (KS)

80-bit key

- SC to the bits at the 4 uppermost rows and the 4 rightmost columns.
- Using a 1-round generalized Feistel transformation- Row'0 := (Row0 << 8) $\oplus$ Row1, Row'1 := Row2, Row'2 := Row3, Row'3 := (Row3 << 12) $\oplus$ Row4, Row'4 := Row0
- A 5-bit round constant RC[i] is XORed with the 5-bit key state for i $\in$ (1,2,..,24).

128-bit key

- SC to the bits at the 8 rightmost columns.
- Using a 1-round generalized Feistel transformation- Row'0 := (Row0 << 8) $\oplus$ Row1, Row'1 := Row2, Row'2 := (Row2 << 16) $\oplus$ Row3, Row'3 := Row0
- A 5-bit round constant is XORed with the 5-bit key state.

Block Diagram

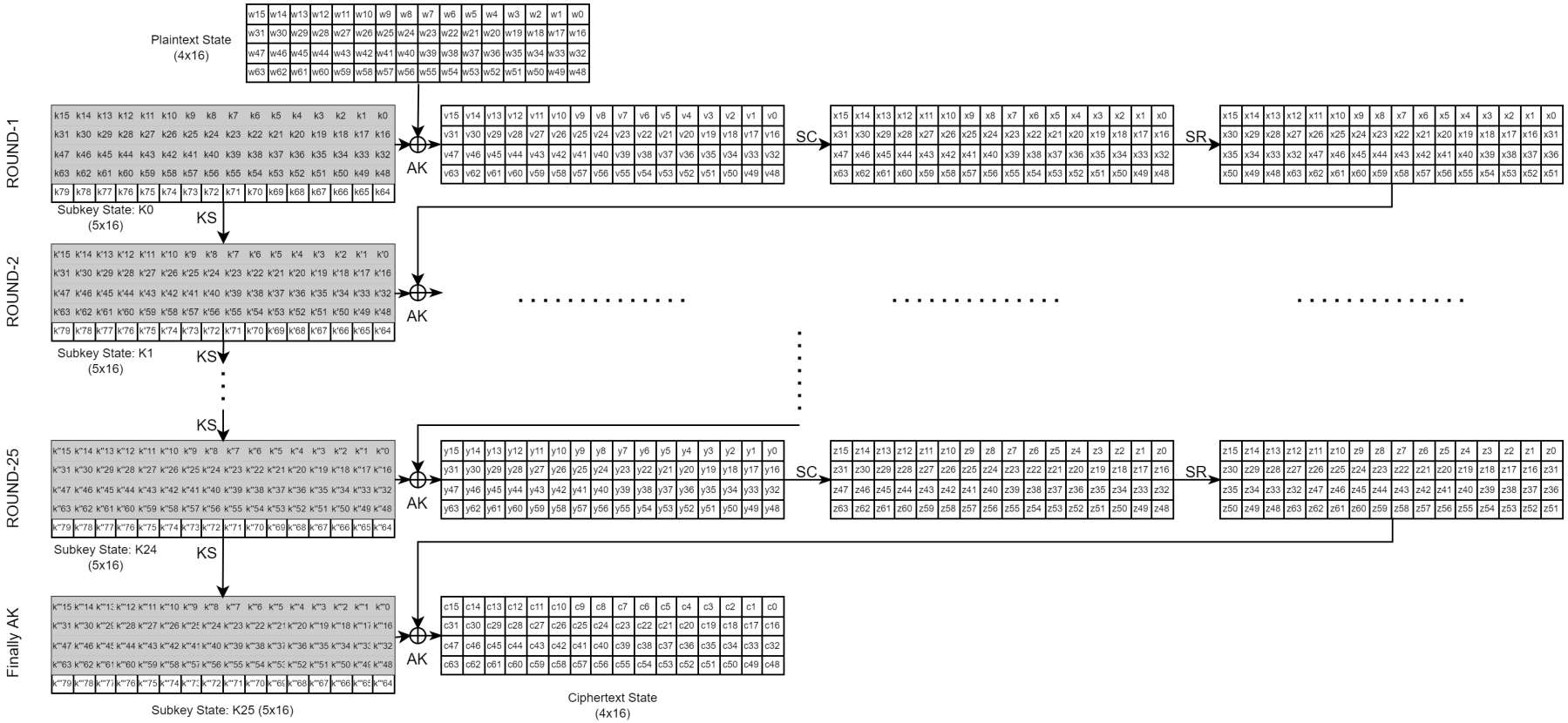

80-bit key block diagram (80.png)

Block Diagram

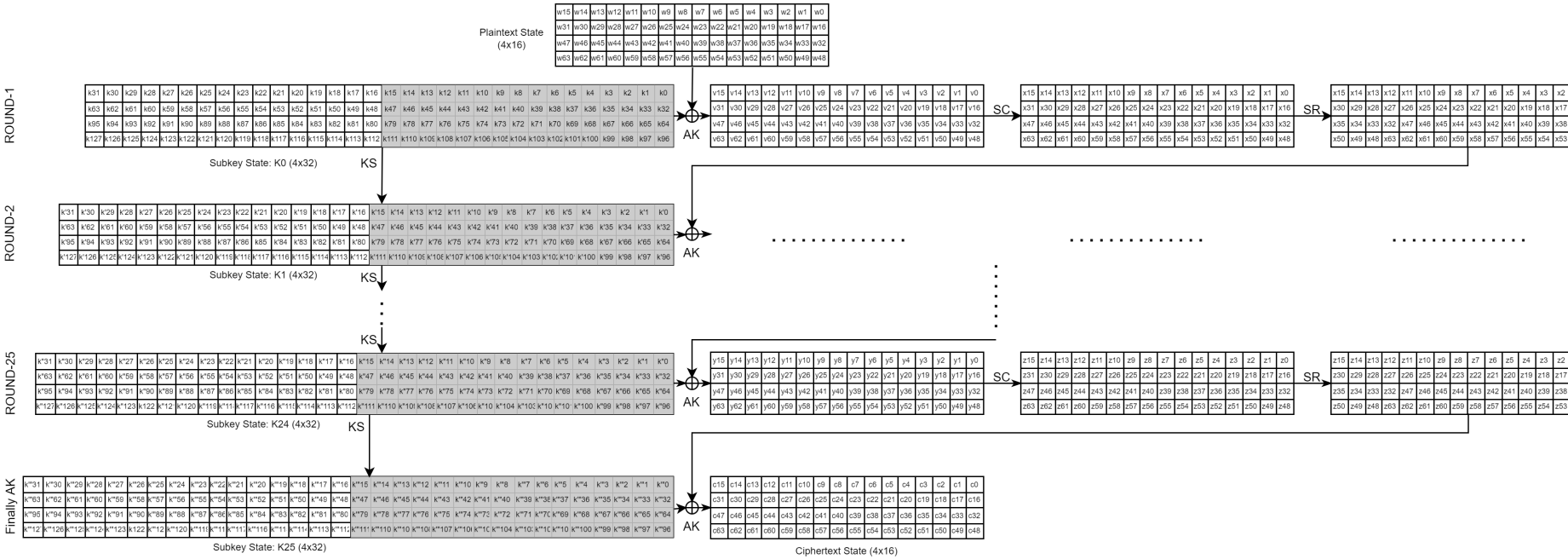

. 128-bit key block diagram (128.png)

Security Analysis

Integral Cryptanalysis

- We implemented the Square attack which used a 4-round integral distinguisher
- Encryption : After 4-rounds, the XOR sum in any 4 bit positions equals to 0, i.e. (Balanced property) $\oplus\ S_4[0] = \oplus\ S_4[17] = \oplus\ S_4[43] = \oplus\ S_4[60] = 0$

P0	P1	P2	P3	P4	P5	P6	P7	P8	P9	P10	P11	P12	P13	P14	P15
P16	P17	P18	P19	P20	P21	P22	P23	P24	P25	P26	P27	P28	P29	P30	P31
P32	P33	P34	P35	P36	P37	P38	P39	P40	P41	P42	P43	P44	P45	P46	P47
P48	P49	P50	P51	P52	P53	P54	P55	P56	P57	P58	P59	P60	P61	P62	P63

- Decryption : We choose 2^{48} plaintexts s.t. cols - 0, 13, 14, 15 maintain CONSTANT property and other 12 cols maintain the ALL property
- 2^{48} Intermediate values $\Rightarrow$ 2^{47} subsets $\Rightarrow$ 2 values.
- $4 \rightarrow 7 \rightarrow 25$ rounds with same integral distinguisher.

Security Analysis

Differential Cryptanalysis

- Differential Cryptanalys is strongest techniques for the cryptanalysis of block ciphers.
- Using the algorithm based on the branch and bound method, the best differential trails from round-1 to round-15 were found-

♯ R	Cor. Pot.	♯ R	Cor. Pot.	♯ R	Cor. Pot.
1	2^{-2}	6	2^{-20}	11	2^{-50}
2	2^{-4}	7	2^{-26}	12	2^{-56}
3	2^{-8}	8	2^{-32}	13	2^{-62}
4	2^{-12}	9	2^{-38}	14	2^{-68}
5	2^{-16}	10	2^{-44}	15	2^{-74}

- Using the 14-round differential propagation, we can mount an attack on 18-round Rectangle cipher
- 25-round Rectangle is enough to behold out against this differential cryptanalysis attack.

Outline

Brownie Point Nominations

- Rectangle is based on SP-Network.
- It is slightly similar to AES.
- Out of 25, the maximum of 18-rounds can be attacked.
- The remaining 7-rounds are for security purposes.
- It attains a very fast software as well as hardware performance.

Outline

Observations

Rectangle Cipher Implementation

- Rectangle is an iterated block cipher with block length 64-bits and key length as 80 or 128bits.
- The S-box of rectangle can be implemented using a sequence of 12 basic logical instructions.
- The P-Layer of rectangle is composed of 3 rotations.

Code Snippet

On Visual Studio

```
lavishg@LAPTOP-KID8KSM9: /mnt/d/pogram/crypto/termPaper/ourCode
lavishg@LAPTOP-KID8KSM9:/mnt/d/pogram/crypto/termPaper/ourCode$ g++ rectangle.cpp
lavishg@LAPTOP-KID8KSM9:/mnt/d/pogram/crypto/termPaper/ourCode$ ./a.out

Enter message in binary :
1 1 1 1 1 1 1 1 1 1 1 1 1 1 1 1
1 1 1 1 1 1 1 1 1 1 1 1 1 1 1 1
1 1 1 1 1 1 1 1 1 1 1 1 1 1 1 1
1 1 1 1 1 1 1 1 1 1 1 1 1 1 1 1

Enter the key in binary :
1 1 1 1 1 1 1 1 1 1 1 1 1 1 1 1
1 1 1 1 1 1 1 1 1 1 1 1 1 1 1 1
1 1 1 1 1 1 1 1 1 1 1 1 1 1 1 1
1 1 1 1 1 1 1 1 1 1 1 1 1 1 1 1
1 1 1 1 1 1 1 1 1 1 1 1 1 1 1 1


Cipher State :
1 0 0 1 1 0 0 1 0 1 0 0 0 1 0 1
1 0 1 0 1 0 1 0 0 0 1 1 0 1 0 0
1 0 1 0 1 1 1 0 0 0 1 1 1 1 0 1
0 0 0 0 0 0 0 1 0 0 0 1 0 0 1 0

lavishg@LAPTOP-KID8KSM9:/mnt/d/pogram/crypto/termPaper/ourCode$
```

Test Case-1

Code Snippet

On Visual Studio

```
lavishg@LAPTOP-KID8KSM9: /mnt/d/pogram/crypto/termPaper/ourCode
lavishg@LAPTOP-KID8KSM9:/mnt/d/pogram/crypto/termPaper/ourCode$ g++ rectangle.cpp
lavishg@LAPTOP-KID8KSM9:/mnt/d/pogram/crypto/termPaper/ourCode$ ./a.out

Enter message in binary :
0 0 0 0 0 0 0 0 0 0 0 0 0 0 0 0
0 0 0 0 0 0 0 0 0 0 0 0 0 0 0 0
0 0 0 0 0 0 0 0 0 0 0 0 0 0 0 0
0 0 0 0 0 0 0 0 0 0 0 0 0 0 0 0

Enter the key in binary :
0 0 0 0 0 0 0 0 0 0 0 0 0 0 0 0
0 0 0 0 0 0 0 0 0 0 0 0 0 0 0 0
0 0 0 0 0 0 0 0 0 0 0 0 0 0 0 0
0 0 0 0 0 0 0 0 0 0 0 0 0 0 0 0
0 0 0 0 0 0 0 0 0 0 0 0 0 0 0 0


Cipher State :
0 0 1 0 1 1 0 1 1 0 0 1 0 1 1 0
1 1 1 0 0 0 1 1 0 1 0 1 0 1 0 0
1 1 1 0 1 0 0 0 1 0 1 1 0 0 0 1
0 0 0 0 1 0 0 0 0 1 1 1 0 1 0 0

lavishg@LAPTOP-KID8KSM9:/mnt/d/pogram/crypto/termPaper/ourCode$
```

Test Case-2

Software Implementation

User-Login Application

- User i.e client can choose between Sign-up or Sign-in option to the server.
- For Sign -up, user gives the username and password.
- For Sign-in, user have to give the same username and password created during sign-up.
- If the encrypted password matches the password stored in the server, then authentication passes.
- Otherwise, authentication fails.

Demo

On Visual Studio

- Client.cpp
- Server.cpp
- Rectangle Cipher used

Code Snippet

On Visual Studio

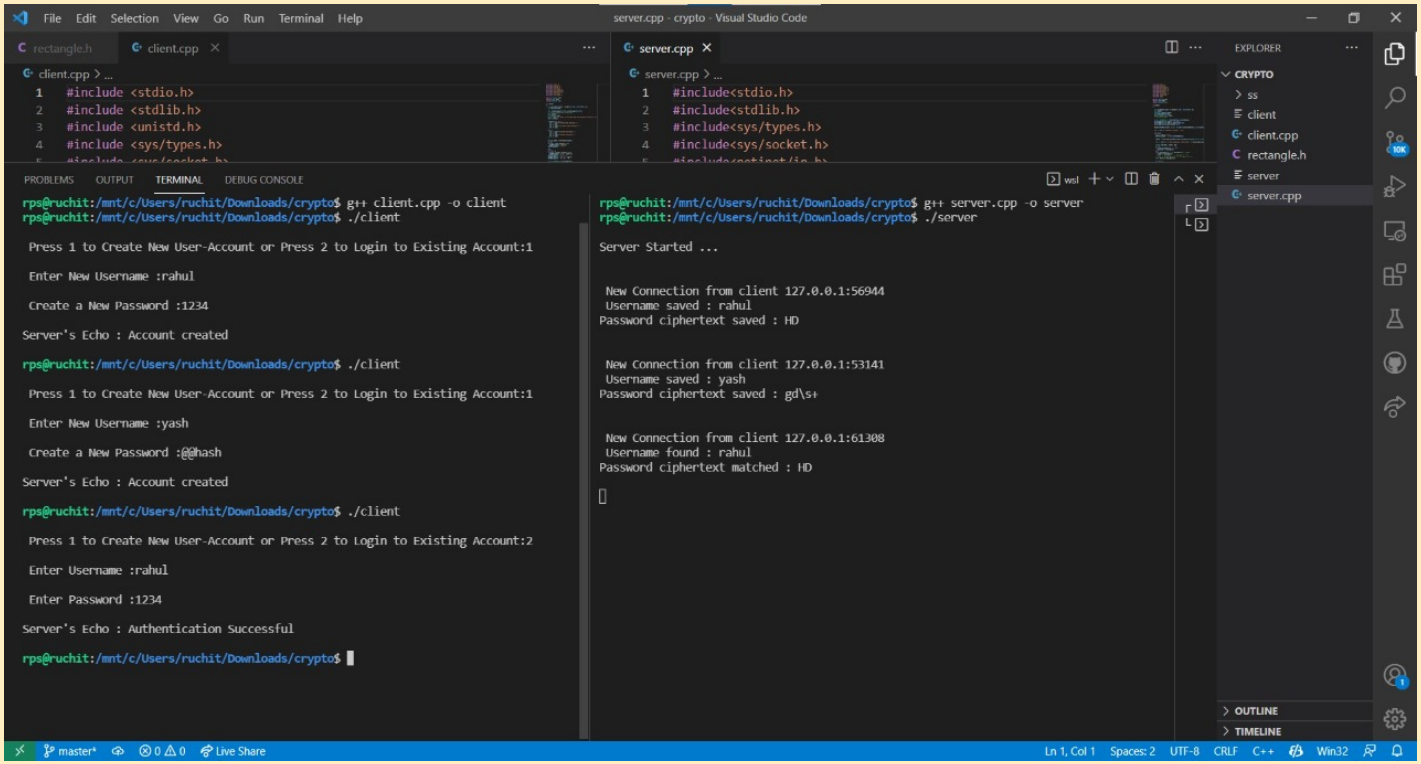

Connection Established

Code Snippet

On Visual Studio

```
rps@ruchit:/mnt/c/Users/ruchit/Downloads/crypto$ g++ client.cpp -o client
rps@ruchit:/mnt/c/Users/ruchit/Downloads/crypto$ ./client

 Press 1 to Create New User-Account or Press 2 to Login to Existing Account:1

 Enter New Username :rahul

 Create a New Password :1234

Server's Echo : Account created

rps@ruchit:/mnt/c/Users/ruchit/Downloads/crypto$ ./client

 Press 1 to Create New User-Account or Press 2 to Login to Existing Account:1

 Enter New Username :yash

 Create a New Password :@@hash

Server's Echo : Account created

rps@ruchit:/mnt/c/Users/ruchit/Downloads/crypto$ ./client

 Press 1 to Create New User-Account or Press 2 to Login to Existing Account:2

 Enter Username :rahul

 Enter Password :1234

Server's Echo : Authentication Successful

rps@ruchit:/mnt/c/Users/ruchit/Downloads/crypto$ ./client

 Press 1 to Create New User-Account or Press 2 to Login to Existing Account:2

 Enter Username :yash

 Enter Password :hash

Server's Echo : Authentication Failed

rps@ruchit:/mnt/c/Users/ruchit/Downloads/crypto$
```

```
rps@ruchit:/mnt/c/Users/ruchit/Downloads/crypto$ g++ server.cpp -o server
rps@ruchit:/mnt/c/Users/ruchit/Downloads/crypto$ ./server

Server Started ...


 New Connection from client 127.0.0.1:56944
 Username saved : rahul
Password ciphertext saved : HD


 New Connection from client 127.0.0.1:53141
 Username saved : yash
Password ciphertext saved : gd\s+


 New Connection from client 127.0.0.1:61308
 Username found : rahul
Password ciphertext matched : HD


 New Connection from client 127.0.0.1:55538
 Username found : yash
But the password ciphertext didn't match with the saved one : lo^
```

Some Input-Outputs

Outline

Conclusion

Rectangle Cipher

- It is a bit-slice styled lightweight block cipher.
- It provides applications enough flexibility.
- It has the ability to trigger various new cryptographic problems.
- Its security is encouraged.

Thanks

Team Members

- Ruchit Prakash Saxena (11941040)
- Anubh Sanoj Gupta (11940150)
- Lavish (11940640)

Implementation Info

- Github Repository: https://github.com/ruchitsaxena/Rectangle-cipher