Multiclass Emotion Classification using xLSTM Learning of Optimized Features from EEG Signal

By

Md. Husain Hamid Chowdhury Ruddro

A thesis submitted in partial fulfillment of the requirement for the degree of Bachelor of Science in Biomedical Engineering

Department of Biomedical Engineering

Khulna University of Engineering & Technology

Khulna-9203, Bangladesh

September, 2025

DECLARATION

This is to certify that the thesis work entitled "**Multiclass Emotion Classification using xLSTM Learning of Optimized Features from EEG Signal**" has been carried out by **Md. Husain Hamid Chowdhury Ruddro** under the supervision of **Dr. A. B. M. Aowlad Hossain,** Professor**,** Department of Electronics and Communication Engineering, Khulna University of Engineering & Technology, Khulna-9203, Bangladesh. The above thesis work or any part of this work has not been submitted anywhere for the award of any degree. The above declarations are true. Understanding these, this work has been submitted for the evaluation of an undergraduate thesis.

The above declarations are true. Understanding these, this work has been submitted for the evaluation of an undergraduate thesis.

Signature of Supervisor

Dr. A. B. M. Aowlad Hossain

Professor

Department of Electronics and Communication Engineering

KUET, Khulna-9203, Bangladesh.

Signature of Candidate

Md. Husain Hamid Chowdhury Ruddro

Roll No: 1915026

Department of Biomedical Engineering

KUET, Khulna-9203, Bangladesh.

APPROVAL

This is to certify that the thesis work submitted by Md. Husain Hamid Chowdhury Ruddro entitled "**Multiclass Emotion Classification using xLSTM Learning of Optimized Features from EEG Signal**" has been approved by the board of examiners for the partial fulfillment of the requirements for the degree of Bachelor of Science in the Department of Biomedical Engineering, Khulna University of Engineering & Technology, Khulna-9203, Bangladesh in Septermber, 2025.

BOARD OF EXAMINERS

1. ---------- Supervisor

   Name: Dr. A. B. M. Aowlad Hossain

   Designation: Professor

   Department: Electronics and Communication Engineering

   KUET, Khulna-9203, Bangladesh.

2. ---------- External

   Name: Dr. Md. Bashir Uddin

   Designation: Professor

   Department: Biomedical Engineering

   KUET, Khulna-9203, Bangladesh.

ACKNOWLEDGEMENT

I would like to express my gratitude to the Almighty Allah SWT, for his greatness & for bestowing upon me the strength, knowledge & persistence required to complete this work.

I am deeply grateful to my esteemed supervisor **Dr. A. B. M. Aowlad Hossain**, Professor, Department of Electronics and Communication Engineering at Khulna University of Engineering & Technology for his continuous support, constant guidance, valuable suggestion and feedback which made it possible to complete this thesis work. His expertise, remarkable patience, and insightful feedback have played a pivotal role in shaping the trajectory of this work.

I would like to express my gratefulness to my external **Dr. Md. Bashir Uddin,** Professor, Department of Biomedical Engineering at Khulna University of Engineering & Technology for giving his valuable time to evaluate this thesis.

I am immensely thankful to my family for their support & the teachers for their guidance, my friends for always being helpful for me.

ABSTRACT

Emotion recognition is highly needed in effective communication among humans and in enhancing natural interaction of human and machine when used in various applications. Electroencephalogram (EEG) is a notable and valid indicator of emotion among other physiological indicators, in particular where the subject of the analysis is unable to convey his/her emotions via posture, gesture or speech. The given paper proposes a full set of the 4-classification of emotions according to the Valence-Arousal model, according to which the emotional conditions are divided into High Valence-High Arousal (HVHA), High Valence-Low Arousal (HVLA), Low Valence-High Arousal (LVHA), and Low Valence-Low Arousal (LVLA). The general process pipeline is comprised of preprocessing, which encompasses filtering, segmentation, and annotation, and a wide variety of feature extraction in time, frequency, and non-linear dynamics spaces, feature selection, and model assessment. Out of the initially obtained 17920 x 1152 features of the familiar DEAP set, an optimized feature set of 17920 x 750 features was obtained with the aid of the Minimum Redundancy Maximum Relevance (mRMR) method. To be classified, the mLSTM and sLSTM modules were combined to form an extended Long Short-Term Memory (xLSTM) based network to address the storage capacity limitations of conventional LSTM, as well as use the long-term temporal correlations of EEG signals. The presented framework demonstrated an accuracy of 81.25% on 1792 samples of blind tests, which was better than the use of conventional LSTM and a range of related literature. The model was also tested on a preprocessed external dataset (EEG Brainwave Dataset: Feeling Emotion): there it performed exceptionally, with an accuracy of 99.06%. The results obtained support the validity and generality of the suggested method, thus making it an effective candidate in the future emotion-sensitive human-computer interaction systems.

TABLE OF CONTENTS

Particulars	**Page**
Title Page	i
Declaration	ii
Approval	iii
Acknowledgment	iv
Abstract	v
Table of Contents	vi
Index	viii
List of Tables	x
List of Figures	xi
List of Abbreviations	xii
Dedication	xiv

INDEX

Particulars		Page
Chapter I	**Introduction**	1
	1.1 Introduction	1
	1.2 Background and Motivation	2
	1.3 Problem Statement	3
	1.4 Objectives	3
	1.5 Contributions	3
	1.6 Outline of Thesis	4
Chapter II	**Background Study and Literature Review**	5
	2.1 Introduction	5
	2.2 Anatomy of Human Brain	5
	2.2.1 Frontal Lobe	6
	2.2.2 Parietal Lobe	6
	2.1.3 Occipital Lobe	6
	2.2.4. Temporal Lobe	7
	2.3 Electroencephalography (EEG)	7
	2.4 Emotion Models	8
	2.5 International 10/20 System	9
	2.6 Emotion Recognition Classification Process	10
	2.7 Literature Review	11
	2.7 Summary	16
Chapter III	**Methodology**	17
	3.1 Introduction	17
	3.2 Dataset Description	18

3.2.1 DEAP 18

3.2.2 EEG Brainwave Dataset 20

3.3 Pre-processing 20

3.3.1 Reading Dataset 22

3.3.2 Reshaping 22

3.3.3 Segmentation 22

3.3.4 Annotation 23

3.4 Feature Extraction 24

3.4.1 Time Domain Features 24

3.4.2 Frequency Domain Features 25

3.5.3 Time-frequency Features 26

3.6 Feature Selection 27

3.6.1 Filter Methods 27

3.6.2. Wrapper Methods 27

3.6.3 Embedded Methods 28

3.7 Emotion Classifier 29

3.7.1 Extended Long Short Term Memory (xLSTM) 29

3.8 Hyperparameter Tuning in Deep Learning 34

3.9 Importance of Hyperparameter Tuning 35

3.10 Summary 36

Chapter IV Results and Discussions 37

4.1 Introduction 37

4.2 Experimental Setup 37

4.3 Evaluation Outcome of the Best Models 38

4.4 Comparison with Related Works 42

	4.5 Summary	44
Chapter V	**Conclusions**	45
	5.1 Conclusion	45
	5.2 Future Work	45
References		47

LIST OF TABLES

Table No.	Description	Page
2.1	Summary of some emotion recognitions studies	15
3.1	Time-domain features extracted from EEG Signals	29
3.2	DEAP dataset content summary	20
3.3	Distribution of the emotional states based on thresholding values.	23
3.4	DEAP dataset description (pre-processed version)	25
3.5	Key parameters of the xLSTM model for both EEG Brainwave Dataset and DEAP Dataset	35
3.6	Key parameters of the xLSTM model	36
4.1	Detailed evaluation of the proposed xLSTM model for DEAP dataset	41
4.2	Detailed evaluation of the proposed xLSTM model for EEG Brainwave Dataset	41
4.3	Summary of some emotion recognitions studies	42
4.4	Comparison of the proposed framework with related works using DEAP dataset	43

LIST OF FIGURES

Fig. No.	Description	Page
2.1	Anatomy of cerebral cortex	6
2.2	Illustration of (Left) EEG signal acquisition and (Right) Different frequency bands of EEG signal	8
2.3	Two typical emotional models, (a) VA model, (b) PAD model	9
2.4	International 10/20 EEG electrode system	10
3.1	Illustration of the overall emotion classification methodology	17
3.2	Protocol of DEAP dataset	19
3.3	Output signals from the 32 channel EEG from DEAP dataset	21
3.4	Illustration of segmentation with overlapping.	23
3.5	Illustration of overall xLSTM architecture	30
3.6	Conventional LSTM model architecture	31
3.7	Illustration of xLSTM Blockstack having mLSTM and sLSTM	32
3.8	Proposed emotion classification model	34
4.1	Confusion matrix of the xLSTM model for (a) DEAP (b) EEG Brainwave Dataset	39
4.2	Loss and Accuracy curves during training and validation of the xLSTM model for DEAP	49
4.3	Loss and Accuracy curves during training and validation of the xLSTM model for EEG Brainwave Dataset	40

LIST OF ABBREVIATIONS

Abbreviation	Full Form
BVP	Blood Volume Pulse
CNN	Convolutional Neural Network
DL	Deep Learning
DFT	Discrete Fourier Transform
ECG	Electrocardiogram
EEG	Electroencephalography
EMG	Electromyography
ER	Emotion Recognition
EOG	Electrooculography
FFT	Fast Fourier Transform
FN	False Negative
FP	False Positive
ICA	Independent Component Analysis
kNN	k-Nearest Neighbor
LSTM	Long Short-Term Memory
MI	Mutual Information
ML	Machine Learning
mLSTM	Matrix Long Short-Term Memory

mRMR	Minimum Redundancy Maximum Relevance
PCA	Principal Component Analysis
PCC	Pearson Correlation Coefficient
PAD	Pleasure-Arousal-Dominance
PLV	Phase Locking Value
PSD	Power Spectral Density
RF	Random Forest
RFE	Recursive Feature Elimination
RSP	Respiration
RMS	Root Mean Square
sLSTM	Scalar Long Short-Term Memory
SVM	Support Vector Machine
TE	Transfer Entropy
TN	True Negative
TP	True Positive
VA	Valence-Arousal
xLSTM	Extended Long Short-Term Memory
XCOR	Cross Correlation
NMI	Normalized Mutual Information
WCC	Wavelet Coherence Coefficient

DEDICATED TO

AMMU

Chapter I

Introduction

1.1 Introduction

In recent years, emotion recognition has gained remarkable attention in the field of Human-Computer Interaction (HCI). It has been widely acknowledged that if machines are capable of perceiving and responding to a user's emotional state, the interaction becomes more natural, seamless, and effective [1]. Traditional modalities for emotion recognition include facial image analysis, body gestures, and acoustic signals such as speech [2]. While these methods have shown some success, they often face challenges because they depend heavily on external factors such as age, facial features, cultural background, language, and even personal habits. This dependency restricts their generalizability and often results in reduced accuracy. More importantly, for individuals who are physically impaired or unable to communicate through expressions, gestures, or speech—such as those with neurological or linguistic disabilities—these approaches are largely impractical [3]. Among the commonly used neuroimaging techniques are functional Magnetic Resonance Imaging (fMRI), standard MRI, Positron Emission Tomography (PET), and Electroencephalography (EEG). In this research, we focus on EEG because of its unique advantages.

EEG records the electrical activity produced by neural structures in the brain, providing direct insights into brain dynamics. Compared to other methods, EEG is relatively inexpensive and widely accessible, which makes it suitable for large-scale studies. Importantly, it poses no major safety risks to participants, unlike some imaging modalities that involve exposure to radiation or require costly scanning facilities. Another critical advantage of EEG is its high temporal resolution, allowing researchers to capture rapid changes in brain activity on the millisecond scale. Furthermore, EEG experiments are highly reproducible, and the technique has been well-validated in both clinical and research settings, ensuring reliable and high-quality data for emotion recognition tasks.

1.2 Background and Motivation

Brain-computer interface (BCI) is a general field of study in neuroscience and is thought of as a niche of human-computer interaction (HCI). It mediates the communication between bridging the human brain and the machines in a way allowing a greater insight into this communication. BCI has also contributed immensely especially in the medical sphere where it contributes towards the creation of biomedical applications. Along with the capabilities of the mental control of external devices, BCI is used in the field of mental states analysis. A bright illustration of such applications is emotion recognition where automatic recognition algorithms are used to improve human-machine communication.

Human brain constitutes almost 100 billion neurons, and each neuron is connected to approximately ten thousand other neurons. These enormous interconnected systems of neurons pass the neuro-signals through which the brain communicates vital information to the rest of the body. The cognitive behavior can also be studied by capturing either brain signals or brain imaging information.

One of the most widely used tools in this respect has now become Electroencephalography (EEG). It is used both clinically and in advanced research, including the diagnosis and treatment of neurological disorders (epilepsy, brain tumors, coma related disorders of consciousness and traumatic brain injuries), as well as modern applications (detecting brain activity of an unresponsive patient, seizure detection, decision-making, and emotion recognition). EEG records the changes of voltage stimulated by ionic currents in the neurons, which are usually approximately 10 to 100 μV on the scalp. It has different frequency ranges, which are dependent on various mental states.

Emotions are a core aspect of human cognition, having an impact on such processes as rational decision-making, perception, social behavior and intelligence. Both internal and external situations influence them. Affective computing concept came into being to enable computers to comprehend the feelings of human beings. Two major methods have been investigated by researchers in the task of recognition of emotions: those that are based on external behavioral evidence, including facial expressions, tone of voice, and body gestures, and those based on physiological measurements, such as EEG.

The researchers have different outputs in the field of emotion recognition because they have different aspects of methods employed in their research. Detecting various emotions based on the EEG signals has several parameters that need to be counted during processing. Such variations are brought about by the choice of various methods of data processing, feature extraction, feature selection as well as feature classification. It is among the major factors that make it quite hard to analyze and choose which method should be taken so that to achieve maximum efficiency.

1.3 Problem Statement

EEG-based emotion recognition quite significantly progressed but there are also some challenges to overcome. Most of the studies focused on limited set of features such as only time domain, frequency domain or non-linear features which lead to reduce optimization of the classification models. Also maximum studies focused on binary class classification (Valence vs Arousal) in (High vs Low) with traditional ML, DL model where a few worked on multiclass classifications but satisfactory result weren't obtained.

1.4 Objectives

In this work, the aim is to build a more generalized and robust novel framework for classifying emotion using optimized sets of data from multiple dataset.

The study's primary goals are outlined below:

- To extract a vast range of features such as time-domain, frequency-domain, nonlinear, entropy-based features.
- To select optimized features from the feature matrix using mRMR feature selection algorithm.
- To build a very new emotion classifier using the xLSTM model having mLSTM and sLSTM variants stacked together.

1.5 Contributions

To address these existing problems, a comprehensive approach have been proposed by extracting vast range of features such as time-domain, frequency-domain, nonlinear, entropy-based features etc. from DEAP dataset and also a pre-processed data have been

taken named EEG Brainwave Dataset: Feeling Emotion. Feature selection have been introduced for selecting the best possible features that are needed for classification using the mRMR feature selection algorithm. And finally xLSTM has been taken as the classifier which is the advanced variant of the LSTM having two variants on its own such as matrix LSTM (mLSTM) and the scalar LSTM (sLSTM) model having efficient long-term dependencies for classification.

1.6 Outline of Thesis

The rest part of this thesis report is organized as follows:

Chapter II- Background Study and Literature Review: Introduces the anatomy of the brain, EEG basics, models of emotions, and the 10/20 electrode. Surveys the available procedures and other studies carried out in the field of EEG based emotion recognition, which identify gaps to be filled by the current study.

Chapter III – Methodology: Outlines the databases (DEAP and EEG Brainwave), pre-processing, segmentation and annotation, feature extraction (time, frequency, nonlinear and entropy), feature selection (mRMR) and the proposed xLSTM classifier with detailed architecture and parameter specifications.

Chapter IV -Results and Discussion: Given the experimental arrangement, training/validation performance, confusion matrices, evaluation measures (accuracy, precision, recall, F1-score). Describes the strengths and weaknesses and compares the suggested model with the state-of-the-art works.

Chapter V -Conclusion and Future Work: Concludes the study, recognizes that the models have limitations based on overfitting on DEAP, and suggests future studies how they can be optimized, improved in architecture, and applied in reality.

Chapter II

Background Study and Literature Review

2.1 Introduction

In past researches, emotion recognition has been studied from various perspectives. This section discusses about theoretical background study and the literature review which includes the anatomical background of brain, Electroencephalogram (EEG) signals, International 10-20 EEG Channels System, Emotional models such as Pleasure-Arousal-Dominance (PAD) model and Valance-Arousal (VA) models and finally a comprehensive Literature review of the related work.

2.2 Anatomy of Human Brain

The neuroscience has turned out to be one of the most challenging fields to study, due to the fact that the brain is a very enigmatic topic. Human brains are individual; it is the brain that makes every person different and defines the personality of an individual. The brain can provide physiological cues that can be used to understand the underlying responses that occurred when the participants took place during the observations. These signals are recorded from the central and autonomic nervous systems across multiple channels. The central nervous system (CNS) comprises the brain and spinal cord, while the autonomic nervous system (ANS) operates subconsciously to regulate vital biological functions such as heart rate, pupil reflexes, and sexual arousal. Two key brain regions associated with emotional processing are the amygdala—located in the frontal portion of the temporal lobe—and the prefrontal cortex, which forms part of the frontal lobe and plays a crucial role in emotional regulation and decision-making.. Although it is not clear that the amygdala may be lateralized, its functioning seems to be related to negative emotions rather than to positive events. The overall structure of the brain is shown in Fig. 2.1 where different lobes are marked with different colors which are the reason of generating brain signals during tasks.

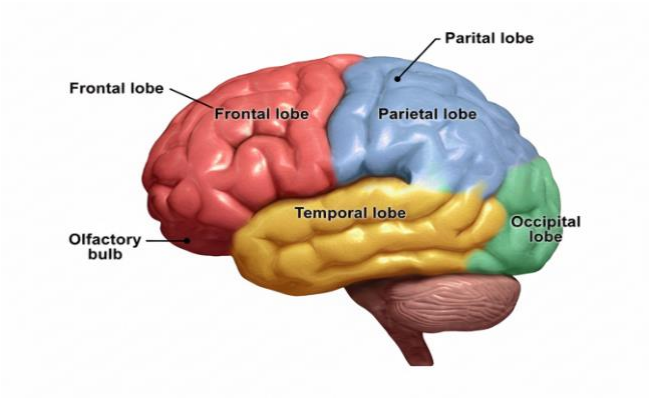

Fig. 2.1 Anatomy of cerebral cortex [5].

The four major components of the brain include the cerebrum, diencephalon, brain stem, and cerebellum. The brain has the largest structure known as the cerebrum. It is entirely covered by a gray matter. This fine layer is known as cerebral cortex. It is surrounded by the forebrain on both sides. The cerebrum is separated into two parts which include the right and left cerebral hemispheres. In the brain, every hemisphere is divided into four lobes that are frontal, parietal, temporal or occipital lobes that each lobe performs its functions in the brain.

2.2.1 Frontal Lobe

The motor system functions are interconnected with those of this region. The prefrontal lobe is in charge of short-term memory, consciousness, and cognition. Since it is the part of the brain that initiates most of the cognitive functions, this part of the brain can be majorly involved in the processes of emotion recognition. It is associated with pleasant feelings like happiness and joy.

2.2.2 Parietal Lobe

This section of the brain is the one that processes haptic sensations, e.g., touch, pressure, and pain, as well as the sense of movement (kinesthesia) and the knowledge of body position (proprioception).

2.1.3 Occipital Lobe

The part of the brain that processes the visual aspect is the occipital lobe. Its main activities involve visual recognition, identification of objects and face, differentiating colors and adding to the formation of memory.

2.2.4. Temporal Lobe

These functions of the temporal lobe include speech, long-term memory, and recognition of sounds. The formation of memory in this region has been usually associated with the areas that process sensory information but also memory plays a role in emotional processing especially in states of arousal. On a larger scale, the parietal and the frontal lobes are usually emphasized to be the main area of activities within the cortex in relation to emotion. Also, the brain waves like alpha, beta and gamma are believed to have a discriminative purpose in distinguishing emotional states. It is also observed that the reaction of the brain to emotional stimuli by people of the opposite sex can vary depending on the gender as suggested by a number of researchers who feel that women are usually more sensitive to emotion than men.

2.3 Electroencephalography (EEG)

The impulses produced by the human body are referred to as Galvanic Skin Response (GSR), which intensify with physiological excitement. At neuronal scale, neurons become active by the firing of dendrites by synapses. The consequence of this activity is the creation of discrepancies in electrical potentials, which are as a consequence of the summation of postsynaptic graded potentials. Large numbers of neurons have to be simultaneously involved in order to record such events of low voltages with EEG sensors. Brain electrical activity may be observed through two major methods, which are invasive and non-invasive. The invasive is the surgical implantation of devices in the brain, and the non-invasive method is the one that captures the brain activity without making surgery.

The most widely used non-invasive technique of recording the electrical activity of the brain as measured by electrodes on the scalp is EEG. These films can provide a lot of information about the dynamic processes of the brain related to not only the cognitive processes but also the emotional state. EEG is an objective and direct method to evaluate the underlying affective states because emotions are produced in the brain and do not have to be seen through subjective self-reports. The apparatus used in recording these potentials of the brain wave is known as an Electroencephalogram. EEG applications have become

more accessible with the introduction of portable and user friendly EEG headsets including the EMOTIV which is now prevalent because of advances in technology.

EEG signals are separated into various frequency bands with each band corresponding to various neural activity types. Practically, EEG is a record in which voltage is measured over time and its properties are highly dependent on the activity of the cortex. The EEG spectrum is habitually divided into five large bands which is shown in Fig. 2.2, which are delta (0 -3 Hz), theta (4 -7 Hz), alpha (8 12 Hz), beta (13 29 Hz), and gamma (30 50 Hz) representing certain neuron processes. With the help of measuring how the energy is distributed through these sub-bands, scientists are able to extract a detailed information regarding neural processes and emotional reactions.

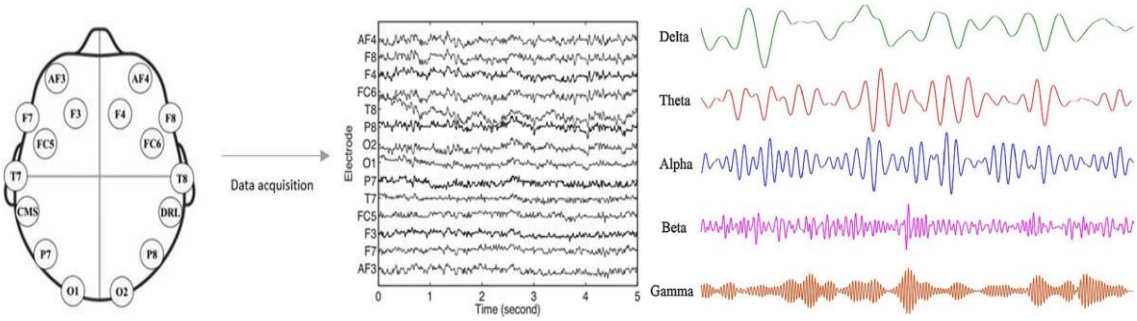

Fig. 2.2 Illustration of (Left) EEG signal acquisition and (Right) Different frequency bands of EEG signal [6].

2.4 Emotion Models

Affective computing is the solution to the communication gap between machines and humans in the human-computer interaction (HCI). It is concerned with facilitating the systems to reason, comprehend and act upon human feelings. To do this, emotional states of users are detected and processed so that the computers could adjust their reaction more closely to human behavior and show more empathetic approach. To represent emotions, researchers often rely on two widely accepted frameworks: the discrete emotion model named PAD model which is a three dimensional model. The discrete model, defines emotions as a set of universal categories such as happiness, sadness, anger, surprise, disgust, and fear. These emotions are considered biologically hardwired, meaning they are recognizable across cultures and often expressed through distinct facial expressions or physiological responses. Complex or mixed emotions are then seen as combinations or

variations of these basic categories, making the model intuitive and easy to apply in many practical settings. [4], [5]. Both these models are illustrated in Fig. 2.3.

On the other hand, the dimensional model named VA which provides a more continuous and flexible way of describing affective states. Instead of labelling emotions as fixed categories, it positions them in a two-dimensional space defined by valence (ranging from unpleasant/negative to pleasant/positive) and arousal (ranging from calm/low intensity to excited/high intensity). For example, joy would correspond to high valence and high arousal, while sadness would map to low valence and low arousal. This model is particularly advantageous for EEG-based emotion recognition because brain activity often reflects a spectrum of emotional experiences rather than neatly separated categories. It allows researchers to capture subtle variations and dynamic shifts in affective states, making it more suitable for continuous monitoring and analysis of emotions in real-world scenarios. [6]. This dimensional approach is particularly useful in EEG-based studies as it provides a flexible and scalable framework to capture subtle affective variations.

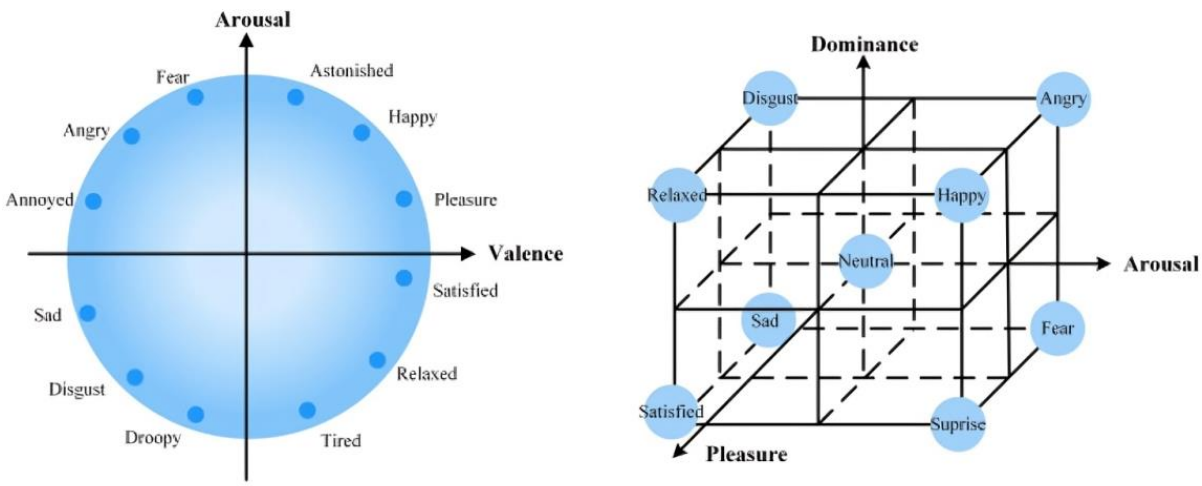

Fig. 2.3 Two typical emotional models, (a) VA Model, (b) PAD Model [10].

2.5 International 10/20 System

In order to provide consistency in experimental arrangements, a system of standardized electrode placement has been implemented, most commonly the International 10/20 System which is illustrated in Fig. 2.4. In this technique, the distance between the electrodes that are placed adjacent to each other is either 10 percent or 20 percent of the entire distance of the skull in either direction (front to back or side to side). This is the

reason behind the name of 10/20 system which is achieved by this proportional spacing. The labeling convent of electrodes is established on their position and the part of the cortex beneath them. Due to this standardization, the locations of electrodes are universally accepted and any scientific research can be done and compared using a standard methodology.

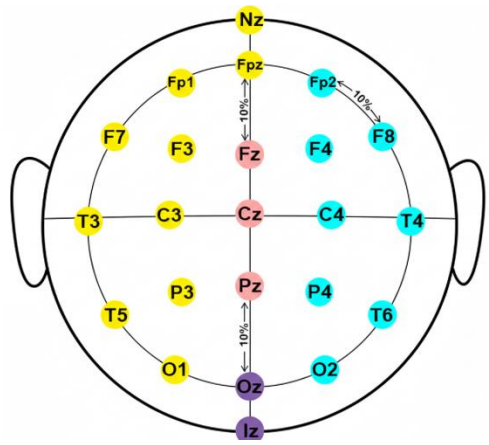

Fig. 2.4 International 10/20 EEG electrode system [10].

The electrode placements in the 10/20 are arranged so as to traverse the frontal, temporal, parietal and occipital parts of the brain with a reference node placed a bit at the back of the ear. The electrodes have initial letters which identify the respective lobes e.g., T: temporal, P: parietal and O: occipital. Another term that is applied in naming electrodes is middle part of the scalp, which is referred to as central lobe, even though it is not an anatomical lobe of the brain. To differentiate between hemispheres, different electrodes on the left and right sides are given odd and even numbers respectively. Although the standard system has 23 major electrode sites, more electrodes may be added to obtain more specific data on given regions where necessary.

2. 6 Emotion Recognition Classification Process

Despite its potential, EEG analysis is inherently challenging due to the large number of recording channels and the overlapping frequency bands that carry emotional information. This complexity necessitates the use of advanced computational methods. Machine Learning (ML) and Deep Learning (DL) techniques have become the cornerstone methodologies in EEG-based emotion recognition [7]. ML-based approaches typically involve manual steps such as feature extraction, selection, and classification, allowing

researchers to carefully design handcrafted features that highlight relevant signal characteristics. On the other hand, DL methods can automatically learn high-level, discriminative features directly from raw or minimally processed EEG data, thereby reducing the reliance on manual pre-processing while capturing complex spatiotemporal patterns [8]. Over the years, researchers have proposed a variety of handcrafted EEG features, such as fractal dimension measures [9], higher-order cross features [10], power spectral density (PSD) [11], differential entropy (DE) [12], Riemannian manifold representations [13], differential causality measures [14], and discrete wavelet transform (DWT) coefficients [15]. In parallel, deep learning-based models—including convolutional neural networks (CNNs) [16], graph neural networks (GNNs) [17], and transformer-based architectures [18]—have demonstrated impressive performance in classifying emotions by leveraging their ability to model complex dependencies across time, space, and frequency. Together, these approaches underscore the significant progress being made in EEG-based affective computing and highlight the importance of combining domain knowledge with advanced computational tools for effective emotion recognition.

2.7 Literature Review

EEG has been extensively studied to understand how the brain responds to emotional experiences. In emotion recognition (ER), ML and DL methods are commonly employed, making use of features extracted from EEG signals. Numerous studies have explored ER with a wide range of feature extraction strategies and classification techniques.

Maria et al. [19] investigated six connectivity measures—Pearson Correlation Coefficient (PCC), Phase Lock Value (PLV), Mutual Information (MI), Normalized Mutual Information (NMI), Cross-Correlation (XCOR), and Transfer Entropy (TE)—on Gamma, Beta, and Alpha sub-bands for classifying emotions in the DEAP dataset. Their custom CNN model for binary Valence–Arousal classification showed that NMI in the Gamma band yielded the best performance. Chen et al. [20] extended this line of work by proposing a brain connectivity–driven domain adaptive residual CNN (BC-DA-RCNN), integrating PCC, PLV, TE, and Wavelet Coherence Coefficient (WCC), with PLV emerging as the most discriminative feature. Similarly, Akand et al. [21] extracted PCC, MI, PLV, and TE features from DEAP and experimented with different combinations (e.g.,

PLV+MI, PCC+TE). Their CNN-based models demonstrated that fused connectivity features improved recognition performance, with PLV+MI achieving the highest accuracy.

Abdumalikov et al. [22] explored filter-based (SelectKBest with ANOVA F-test), embedded-based (LASSO with Bayesian Optimization), and wrapper-based (Genetic Algorithm) feature selection methods across multiple classifiers including Random Forest (RF), Logistic Regression, XGBoost, and Support Vector Machine (SVM). They found that LASSO with RF improved results on the EEG Emotion dataset, while XGBoost with GA performed best on DEAP. Wang et al. [23] introduced a channel selection method based on NMI, transforming EEG signals into spectrograms using Short Time Fourier Transform (STFT). Their study revealed that only 8 channels were optimal for valence and 10 channels for arousal in DEAP, suggesting effective dimensionality reduction strategies. Yang et al. [24] also incorporated feature selection by integrating Mutual Information with Sequential Forward Floating Selection (MI-SFFS), improving cross-subject recognition when combined with SVM, k-nearest neighbors (kNN), and RF. Yang et al. [25] used a different approach by combining Significance Testing with Sequential Backward Selection (ST–SBSSVM) and achieved improved binary classification performance on DEAP and SEAD.

Liu et al. [26] classified five emotional states using PSD and Brain Asymmetry features with an SVM employing an RBF kernel. While their model achieved strong within-stimulus results, cross-stimulus classification remained challenging, though SVM-RFE improved performance. Islam et al. [27] combined shallow and deep learning pipelines by extracting diverse time, frequency, and time–frequency features e.g., Fast Fourier Transform (FFT), PSD, STFT, Wavelet Transform, DCT, Higher-Order Crossing) and applying feature selection via Particle swarm optimization (PSO) and Genetic algorithm (GA). Their results showed that while shallow models e.g. SVM, kNN, DT, Multi Layer Perception (MLP) were competitive, CNN variants consistently achieved higher performance.

Several studies compared deep architectures for EEG emotion recognition. Gaddanakeri et al. [28] applied FFT to extract Alpha, Beta, Theta, and Gamma bands and compared CNN and LSTM models, showing that LSTM significantly outperformed CNN in classifying Valence, Arousal, and Dominance. Chowdary et al. [29] conducted a similar comparison of Recurrent Neural Network (RNN), Long Short Term Memory (LSTM), and

Gated recurrent unit (GRU) models on the EEG Brain Wave dataset, with LSTM achieving the best accuracy. Prabowo et al. [30] introduced Asymmetric Windowing Recurrence Plots (AWRP) as a novel encoding approach, demonstrating improved classification performance when paired with a LeNet-5 CNN.

Ensemble and hybrid models further improved performance. Iyer et al. [31] combined CNN, LSTM, and hybrid CNN-LSTM models using differential entropy features, with ensemble CNN-LSTM performing best on DEAP and SEED. Dhara et al. [32] proposed a fuzzy ensemble combining CNN-LSTM, CNN-GRU, and 1D-CNN, enhanced with Gompertz-based fuzzy ensembles, which achieved strong binary classification results on DEAP and AMIGOS while being computationally efficient. Algarni et al. [33] leveraged Bi-LSTM with Binary Grey Wolf Optimizer (BGWO) for feature selection, using statistical, Wavelet Packet Decomposition (WPD), and Hurst Exponent features, and achieved superior performance compared to traditional models. Oka et al. [34] proposed an Attention-based PSO-LSTM, combining LSTM with attention for better temporal feature representation and PSO for hyperparameter tuning, achieving improved multiclass classification on DEAP and SEED.

Asif et al. [35]developed the DENS dataset and employed a hybrid CNN-LSTM with STFT features, reporting better four-class classification results than DEAP and SEED. Azar et al. [36] designed a modified Convolutional Fuzzy Neural Network (CFNN) that refined FFT features with fuzzy logic, outperforming SVM, kNN, Bi-LSTM, and CNN. Zhang et al. [37] introduced TPRO-NET, a CNN–Transformer model leveraging differential entropy, which excelled in binary and multi-class classification on DEAP and SEAD while reducing computational cost. Pichandi et al. [38] fused AlexNet and DenseNet-121 features, reduced with PCA, and classified them with SVM, outperforming conventional deep learning methods.

Karthiga et al. [39] applied ICA for artifact removal, decomposed EEG signals into frequency bands, and used Artificial Bee Colony (ABC) and Grey Wolf Optimizer (GWO) for feature extraction. Their hybrid CNN-ABC-GWO model significantly outperformed CNN, CNN+LSTM, and RNN baselines on DEAP and SEED. Cheng et al. [40] proposed MSDCGNet, integrating Multi-Scale Dynamic 1D CNN, Gated Transformer Encoder, and

Temporal Convolutional Network (TCN), achieving robust results across DEAP, SEED, and SEED-IV datasets.

Asadzadeh et al. [41] advanced EEG-based emotion recognition by applying a Dynamic Graph Convolutional Neural Network (DGCNN). To overcome EEG's low spatial resolution, they introduced a Bernoulli–Laplace Bayesian model mapping scalp signals to brain sources, with sLORETA providing initialization. Tested on DEAP, SEED, and their own dataset, their approach confirmed that EEG source localization enhanced both spatial resolution and classification accuracy.

Shen et al. [42] proposed a Multi-Scale Frequency Bands Ensemble Learning (MSFBEL) framework for EEG-based emotion recognition on the DEAP dataset. They reorganized EEG bands into local and global frequency scales and trained base classifiers on each scale, later fusing them through ensemble learning. Their study highlighted that multi-scale band representations provide more discriminative features than simple concatenation, improving robustness in four-class emotion classification.

Hu et al. [43] proposed a VMD–Dispersion Entropy framework for EEG-based emotion recognition on the DEAP dataset. EEG signals were decomposed into intrinsic components using Variational Mode Decomposition, and Dispersion Entropy features were extracted from selected emotion-related channels. Their study showed that combining decomposition with entropy measures provides more discriminative features than directly applying entropy on raw signals.

Pichandi et al. [44] used AlexNet and DenseNet-121 for automatic feature extraction and fused those features while using the Principle Component Analysis for reducing dimensionality. They had experimented on DEAP dataset for binary class and the EEG Brainwave dataset for multiclass using SVM model and gave better result than traditional deep learning models.

Alibrahim and Kurdi [45] proposed GANN which integrates GRU layers and attention mechanism for classifying emotion into Positive, Neutral, and Negative using the EEG Brainwave dataset of feeling emotion. They achieved high accuracy with fewer parameters compared to standard RNN, LSTM, and GRU architectures.

Table 2.1 Summary of some related emotion recognitions studies.

Authors (Year)	Features	Model/Method	Dataset	Remarks
Maria et al. [23]	PCC, PLV, MI, NMI, XCOR, TE (Gamma, Beta, Alpha)	Custom CNN	DEAP	NMI (Gamma) achieved the best accuracy for Valence–Arousal classification
Gaddanakeri et al. [24]	FFT (Alpha, Beta, Theta, Gamma)	CNN, LSTM	DEAP	LSTM model showed superior performance compared to CNN
Abdumalikov et al. [25]	Feature selection: SelectKBest, LASSO, GA	RF, LR, XGBoost, SVM	DEAP, EEG Brainwave	LASSO+RF effective on EEG Brainwave; GA+XGBoost effective on DEAP
Wang et al. [26]	STFT Spectrograms, Channel selection via NMI	SVM	DEAP	Identified optimal channel subsets for Valence (8) and Arousal (10)
Iyer et al. [34]	Differential Entropy	Ensemble CNN, LSTM, Hybrid	DEAP, SEED	Ensemble CNN-LSTM achieved highest accuracy in 3-class tasks
Dhara et al. [35]	FFT, Statistical features	CNN-LSTM, CNN-GRU, 1D-CNN (Fuzzy Ensemble)	DEAP, AMIGOS	Fuzzy ensemble boosted binary emotion classification
Azar et al. [40]	FFT refined with fuzzy logic	CFNN	DEAP, SEED	Outperformed CNN, Bi-LSTM, and SVM
Zhang et al. [39]	Differential Entropy	TPRO-NET (CNN + Transformer)	DEAP, SEED	Achieved strong results in both binary and multi-class classification
Karthiga et al. [41]	ICA-cleaned EEG, Alpha/Beta/Gamma/ Theta bands	CNN + ABC + GWO	DEAP, SEED	Hybrid meta-heuristic CNN showed superior performance
Asif et al. [39]	Statistical, Spectral features	Hybrid CNN-LSTM	DENS, DEAP, SEED	DENS > DEAP/SEED (4-class)
Pichandi et al. [40]	Deep features (AlexNet, DenseNet-121)	PCA + SVM	DEAP, EEG Brainwave	Fused features improved over traditional DL

2.7 Summary

The literature review addresses handcrafted features (PSD, entropy, connectivity measures), and DL models (CNN, LSTM, Transformer, hybrid architectures). Other related research points to the difficulties in multiclass emotion recognition, feature redundancy and generalization problems. The gaps that have been identified including absence of optimized feature pipelines and sophisticated memory models are the basis on which the extended LSTM (xLSTM) framework is proposed in the current thesis.

Chapter III

Methodology

3.1 Introduction

This chapter shows the step wise approach to the design of the proposed framework. It describes the experiment, data (DEAP and EEG Brainwave Dataset: Feeling Emotion) and processing before the classification. It explains the justification of segmentation, annotation, and feature selection that is optimized. Lastly, it presents the extended Long Short Term Memory (xLSTM) classifier with its benefits that it has over traditional Long Short Term Memory (LSTM). The overall methodology is given in Fig. 3.1.

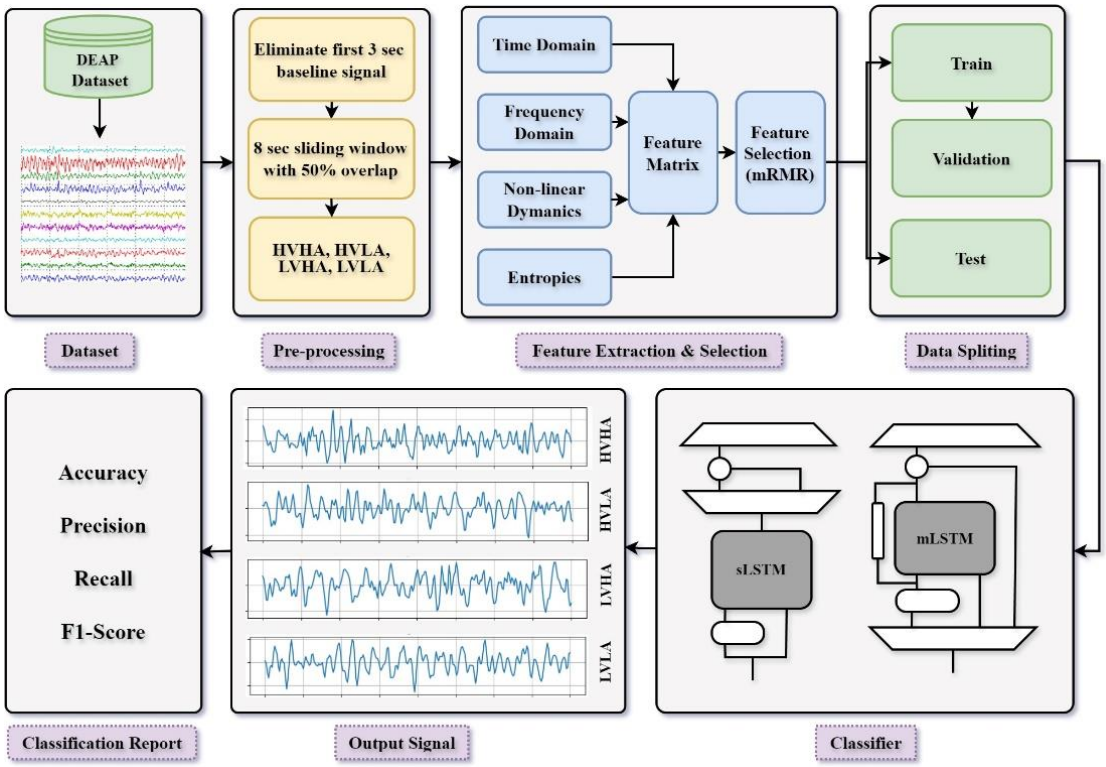

Fig 3.1 Illustration of the overall emotion classification methodology.

The pipeline starts with the acquisition of the dataset, after which it passes through preprocessing procedures such as removing a baseline, segmentation with an 8-second sliding window, and so forth. Features of time frequency, non-linear dynamics and entropy domains are extracted and an integrated feature matrix is created, feature selection is done using Minimum Redundancy Maximum Relevance (mRMR). The data is then divided into training, validation and testing data. Stacked and modified xLSTM model is used to classify

selected features and the performance is measured in terms of accuracy, precision, recall, and F1-score.

3.2 Dataset Description

In this work, two dataset have been taken for evaluation. One is benchmark dataset "DEAP: A Database for Emotion Analysis using Physiological Signals" which is the raw signal and another one is "EEG Brainwave Dataset: Feeling emotion" which is a preprocessed dataset. The DEAP dataset have been gone through many processes such as filtering, segmentation, annotation, features extraction, feature selection and classification. Whereas the preprocessed dataset just passed through feature selection and classification.

3.2.1 DEAP

DEAP is a publicly accessible dataset on the Internet with the aim of re searching human emotions on the basis of EEG signals usage. The DEAP [46] was generated by researchers at Queen Mary University of London. A multimodal data is founded on electroencephalogram and peripheral physiological data. Overall dataset is separated into two parts:

(1) The outcomes of a self-evaluation conducted online in which 12 one-minute clips of music videos were rated by 14-16 participants on the level of arousal, valence, and dominance.

(2) A semi-experiment, where 32 respondents were shown a sample of 40 of the said music videos and given ratings, physiological measurements, and facial video of the respondents, was videotaped. EEG and physiological measures of the participants were recorded and the participants were also requested to rate the movies out of a scale of one to nine. Moreover, a video of the frontal face of all the 22 participants was recorded. The running time limit in every video is 60 seconds. In particular, this minute was selected, as it was the one when the emotional reaction was experienced.

Overall DEAP dataset protocol is illustrated in fig. 3.2 where the baseline session of every experiment lasts three seconds, after which 60 seconds of video stimulation is applied with EEG (32 channels) and peripheral (8 channels) data recorded. Then, the participants conduct a 30-second self-evaluation, assigning values to valence, arousal, dominance and liking. Each subject has 40 of these trials in its entire dataset.

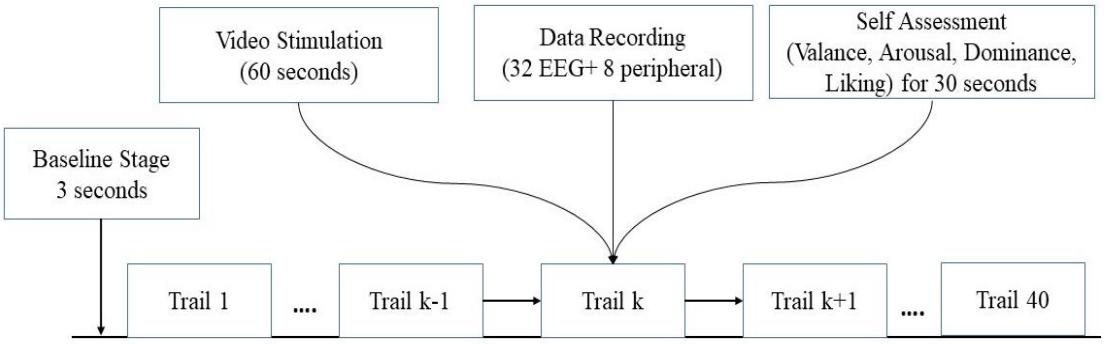

Fig. 3.2 Protocol of DEAP dataset.

DEAP dataset content summary is given in Table 3.1 which involves video stimuli to elicit emotions where 32 subjects were used to complete 40 trials each as mentioned before. Emotions are rated by arousal and valence and self-assessment ratings are rated by rating on a 9-point scale. At 128 Hz, multimodal signals were recorded, such as EEG, Electrooculography (EOG), Galvanic Skin Response (GSR), Blood Volume Pulse (BVP), Respiration (RSP), Electromyography (EMG), and Skin Temperature (SKT)

Table 3.1 DEAP dataset content summary.

Elicitation Material	Videos
Emotion Labels	Arousal, Valance
Number of Subjects	32
Collected Signals	EEG, EOG, GSR, BVP, RSP, EMG, SKT
Length	60 seconds
Sampling Frequency	128 Hz
Rating Values	Arousal: 1-9, Valance: 1-9

Two types of dataset are provided by DEAP where the original signal with a sampling rate of 512 Hz and the pre-processed signal that have been down sampled to 128 Hz. EOG artifacts are removed by Independent Component Analysis (ICA). We have used the pre-

processed dataset in this study. The pre-processed version of DEAP dataset description is given in Table 3.2.

Table 3.2 DEAP dataset description (pre-processed version).

EEG data format for each subject		
Array	Array shape	Array content
Data	40*32*8064 (384 base +7640 trail	video/trail*channel*data
Labels	40*2	video/trail*labels(valance, arousal)

3.2.2 EEG Brainwave Dataset

This have been used in this study which consists of 2132 frames of EEG from two subjects (1 male, 1 female, and aged 20-22) [47]. The dataset reflects three states of emotions named Positive, Negative, and Neutral, each recorded from 6 different films with a duration of 60 seconds, producing 12 minutes of data per state (Positive, Neutral and Negative). Six minutes of neutral data was also recorded. The data was recorded from a commercially available MUSE EEG headband and the electrode locations are TP9, AF7, AF8, and TP10. The raw EEG signals were sampled at a rate of 150 Hz which finally results. A 1 second sliding window with a 50% overlap had been used to extract the features. From every window, statistical as well as spectral features were extracted which captured the time domain statistics (mean, standard deviation, skewness, kurtosis), frequency-domain characteristics Fast Fourier Transform (FFT) power peaks, and inter-channel relationships (covariance, eigenvalues, matrix logarithms). A total of 1,274 features were taken out from each 1 second window of EEG data-frame. To incorporate temporal context, the feature vector from each window was concatenated with that of the immediately preceding window (lag 1), resulting in a combined feature dimensionality of 2,548 per instance. Following this preprocessing, the final dataset comprised 2,132 instances. It has evenly distributed labels having class distributions about 708 positive (happiness, joy), 708 negative (sadness, anger, fear), and 716 neutral (baseline, no stimuli).

3.3 Pre-processing

Scalp EEG records are frequently subject to several forms of noise, which is commonly called artifact. These artifacts may be properly grouped into two categories:

(1) Physiological artifacts: These come about due to the normal body mechanisms of a human being such as eye motions and blinking, heartbeats, movement of the head, jaw and tongue, and breathing. Artifacts that are eye related are those that are captured as EOG, usually at frequencies of approximately 4 Hz because of blinking or eye movement. Heart activity artifacts, recorded in the form of ECG, and muscular activity artifacts, recorded in the form of EMG produced during head and other muscle movement, do not typically occur below 30 Hz. Of them, the most common in the Human Computer Interface (HCI) studies are EMG and EOG artifacts.

(2) Non-physiological artifacts: These are artifacts that are external to the body and have an impact on the EEG signal. This is often caused by interference of power lines, changes in the impedance of electrodes, electrode motion, and recording component quality. Collectively, they can be used to greatly misrepresent EEG recordings, and preprocessing and artifact removal are therefore vital processes in signal processing.

In case of DEAP dataset, we have taken the pre-processed signal where, the EOG artifacts are removed, downsampled to 128 Hz, bandpass frequency filter from 4.0-45.0Hz was applied in this version. So, we further reshaped, segmented the signal as pre-processing. In Fig 3.2 the extracted signals of 32 channel EEG are shown from the DEAP dataset.

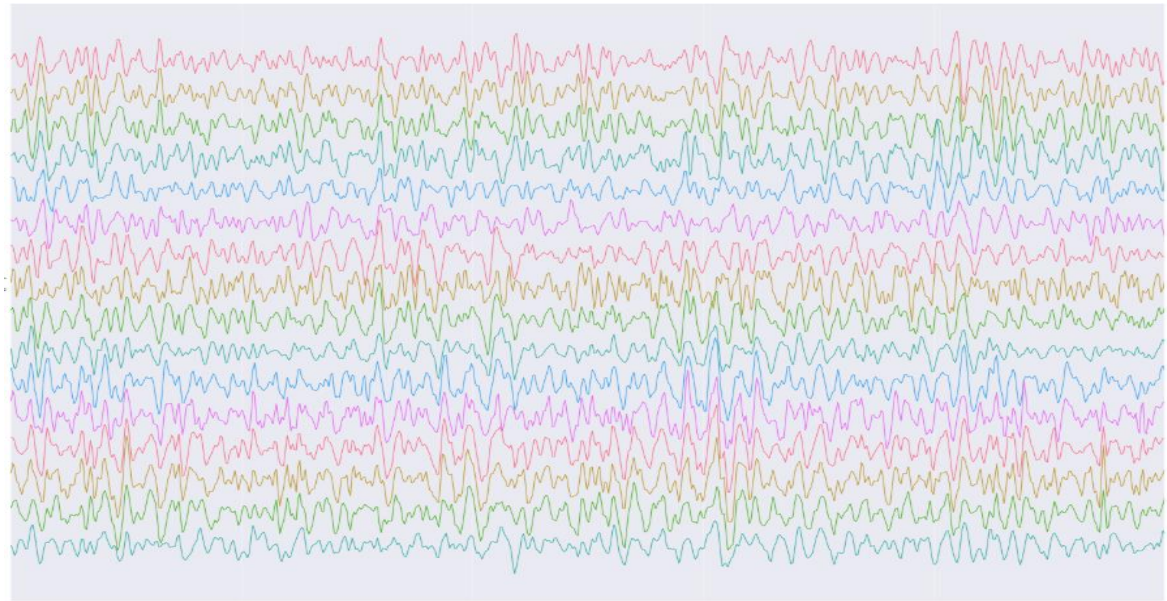

Fig. 3.3 Output signals from the 32 channel EEG from DEAP dataset.

3.3.1 Reading Dataset

The EEG dataset used in this research is in the MATLAB-compatible (.mat) format and was accessed from the official DEAP dataset website. For this study, I worked with the Python version of the dataset. The data contains EEG recordings from 32 participants, each watching 40 different music videos (referred to as trials).

Each recording includes 40 channels in total, but I focused mainly on the 32 channels that correspond to brain activity, excluding the 8 channels related to artifacts. For every video trial, the EEG data includes a 3-second pre-trial baseline.

I processed the data by extracting the 32 channels and all 40 trials for each participant, repeating this for all 32 participants. This prepared dataset was then used for further signal processing and classification.

3.3.2 Reshaping

The total length of each EEG signal is approximately 63 seconds, but the first 3 seconds represent a baseline period that doesn't contain any emotional information, so these initial 3 seconds are removed from the analysis. Since the data was recorded with a sampling rate of 128 Hz, this means there are 128 samples collected every second. For each trial, after removing the baseline, we are left with 60 seconds of meaningful data, which equals 128 multiplied by 60, resulting in 7,680 data points per trial.

After organizing the data, it has the shape of 32 subjects, each with 40 trials, 32 EEG channels, and 7,680 samples per trial. In other words, the dataset is structured as Subjects × Trials × Channels × Samples = 32 × 40 × 32 × 7,680, making it easy to process and analyze the data for each participant and trial across all brain channels.

3.3.3 Segmentation

To increase the number of samples available for training and classification, the EEG signals were segmented into smaller time windows. According to Candra et al. [48], the ideal segmentation window for emotional EEG signals ranges from about 3 to 10 seconds for arousal and 3 to 12 seconds for valence. In this experiment, an 8-second sliding window with a 50% overlap was used which is illustrated in Fig. 3.3.This means that each trial is divided into 14 overlapping segments, providing more data points for analysis. Since there

are 32 participants, each with 40 trials, and each trial is now split into 14 segments, the total number of segments becomes 32×40×14=17,920. These segments form the basis for feature extraction and help improve the performance of the classification model.

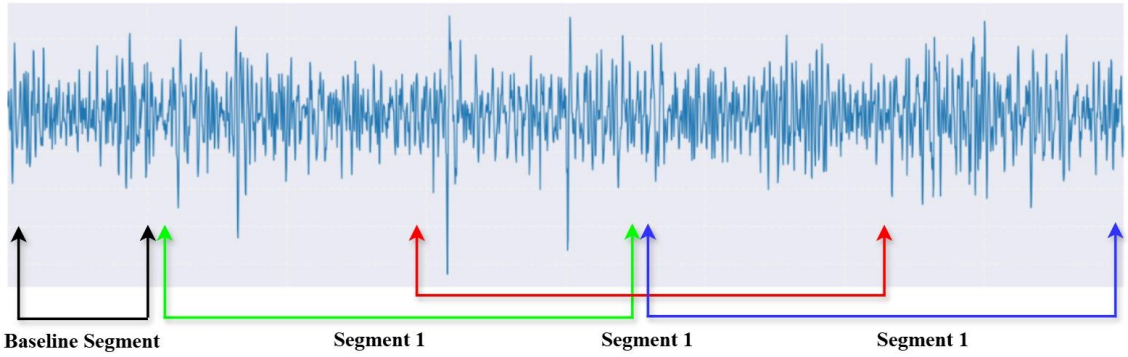

Fig. 3.4 Illustration of segmentation with overlapping.

3.3.4 Annotation

In this study, participants rated their feelings for valence and arousal on a scale from 1 to 9. These ratings were then categorized into two groups: High and Low. If the rating was greater than 5, it was classified as High Valence (HV) or High Arousal (HA). If the rating was 5 or below, it was classified as Low Valence (LV) or Low Arousal (LA).

By combining these valence and arousal categories, the emotional states were grouped into four distinct classes: HVHA, HVLA, LVHA, and LVLA. The categorization of different emotional states is given in Table 3.3.This classification helps in analyzing the emotional responses more effectively.

Table 3.3 Distribution of the emotional states based on thresholding values.

Emotional States	Valance	Arousal	Threshold
HVHA	High	High	Valance>5, Arousal>5
HVLA	High	Low	Valance>5, Arousal<=5
LVHA	Low	High	Valance<=5, Arousal>5
LVLA	Low	Low	Valance<=5, Arousal<=5

3.4 Feature Extraction

Feature extraction plays a crucial role in recognizing emotions from EEG signals. Essentially, it involves identifying and extracting the most important characteristics or patterns from the raw EEG data that can help distinguish between different emotional states. Since EEG signals are complex and contain a lot of information, selecting the right features is key to building an effective classification model.

In this study, a variety of features were extracted from different perspectives to capture the full range of brain activity related to emotions. These include features from the time-domain, which look at how the signal changes over time; frequency-domain features, which examine the signal's activity at different frequencies; non-linear dynamics features, which analyze the complex and chaotic nature of brain signals; and entropy features, which measure the level of randomness or unpredictability in the data. By combining features from these different areas, the study aims to capture a comprehensive picture of the EEG signals to improve the accuracy of emotion classification.

3.4.1 Time Domain Features

Time-domain analysis of EEG captures the statistical and morphological characteristics of brain signals, reflecting variations in amplitude, complexity, and temporal dynamics that are essential for distinguishing different mental states. There are several time domain features are extracted in this study like Mean, Standard deviation, Variance, Skewness, Kurtosis Root Means Square (RMS), Mean Peak Amplitude, Peak Amplitude, Peak Frequency, Number of Peaks, Energy and Zero-Crossing Rate. The formulas involve some of these features are given below with short description.

The Table 3.4 represents a summary of the statistical and time features that were calculated on the EEG signals. The measures of central tendency and dispersion of the signal are embodied in the mean, the variance, and standard deviation. Skewness and kurtosis characterize the higher order properties of distribution, and RMS is an approximation of signal power. Mean peak amplitude is the mean magnitude of the identified peaks and the zero-crossing rate describes attributes on frequencies by the sign changes in the signal.

Table 3.4 Extracted time-domain features and their mathematical formulations.

Features	Formula	Description
Mean	$\mu = \frac{1}{N}\sum_{n=1}^{N} x[n]$	Average Amplitude of the signal
Variance	$\sigma^2 = \frac{1}{N}\sum_{n=1}^{N}(x[n]-\mu)^2$	Measures signal spread around mean
Standard Deviation	$\sigma = \sqrt{\sigma}$	Dispersion of signal amplitude
Skewness	$\frac{\frac{1}{N}\sum_{n=1}^{N}(x[n]-\mu)^3}{\sigma^3}$	Signal distribution asymmetry
Kurtosis	$\frac{\frac{1}{N}\sum_{n=1}^{N}(x[n]-\mu)^4}{\sigma^4}$	Peakedness of distribution
RMS	$\sqrt{\frac{1}{N}\sum_{n=1}^{N} x[n]^2}$	Signal power magnitude
Mean Peak Amplitude	$\frac{1}{P}\sum_{i=1}^{P} p_i$	Average amplitude of detected peaks
Zero-Crossing Rate	$\frac{1}{N-1}\sum_{n=1}^{N-1} 1x[n] \odot x[n+1] < 0$	Rate of sign changes

3.4.2 Frequency Domain Features

Frequency-domain analysis provides insights into the distribution of signal power across different frequency components, allowing for a better understanding of the spectral characteristics of EEG signals. Techniques such as the Fast Fourier Transform (FFT) and Power Spectral Density (PSD) are commonly used for this purpose. In this study, FFT was employed to perform frequency analysis. Several frequency-domain features were extracted, including Band Powers (Alpha, Beta, Delta, Gamma, and Theta), Power Ratios (Delta/Theta, Beta/Alpha, and Theta/Alpha), and various Spectral Features such as Bandwidth, Spectral Centroid, Spectral Entropy, Spectral Flatness, Spectral Roll-off, Spectral Spread, and Total Power.

Fourier analysis is a powerful technique used to convert a time-domain signal into its frequency-domain representation. This process decomposes the signal into its component frequency components for allowing for detailed spectral analysis. The Fast Fourier Transform (FFT) is commonly employed to efficiently compute the Discrete Fourier Transform (DFT) of the signal. The mathematical expression of the DFT is given in Equation (1)..

$$X_k = \sum_{n=0}^{N-1} x_n e^{-j2\pi kn/N} \tag{1}$$

Where, N denotes the number of outputs of X_k, there is a sum of N terms for each output, and $e^{-j2\pi/k}$ is the primitive nth root of 1. No difference in the outcomes of the FFT and DFT calculation has been found; both give an identical frequency-domain representation of the signal. But the FFT saves a lot of computation time offering significantly quicker results than the standard DFT technique.

3.5.3 Time-frequency Features

In time-frequency analysis, the discrete wavelet transform (DWT) is more commonly used because it is capable of giving both time and spectral data in a single analysis. The wavelet transform works on the premise that a wavelet function system of functions is used to represent or approximate a signal. All the wavelets of this system are created by translating and scaling a base, or mother, wavelet. The coefficients that have been received in the transform can be used to reconstruct or approximate the original signal. The wavelets are specially beneficial due to the fact that they tend to discover locality of signals in both time and frequency domain, and therefore, they are quite applicable in analyzing non-stationary signals such as EEG. In finer scales, the high frequency wavelets enable an accurate observation of the short period of time (observing the rapid changes in the signal), and in larger scales, the low-frequency wavelets provide an overall picture (showing the slower change with longer periods). This capability of multiple resolution means that the wavelet analysis is very useful in the study of complex brain signaling. The continuous wavelet transform of a signal $x(t)$ is defined in equation (2).

$$X_\omega(a,\tau) = \frac{1}{\sqrt{a}} \int_{-\infty}^{\infty} x(t)\bar{\psi}\left(\frac{t-\tau}{a}\right) dt \tag{2}$$

Where a represents scale displacement, τ represents time displacement and $\psi(t)$ is a continuous time and frequency domain function.

3.6 Feature Selection

One important process in data preparation in machine learning is feature selection. Its main aim is to select and keep only those input features with most notable impact on the accuracy of prediction. Models can be simplified, trained less quickly, and more effectively by attending to the most relevant features.

In addition to this, feature selection also helps in minimizing the chance of overfitting- in which a model picks up noise or irrelevant trends in the training data, and thus delivers a poor result with unseen data. It is also more interpretable of the models making it particularly useful when high-dimensional datasets have redundant or irrelevant features.

In general, feature selection enhances the quality and accuracy of machine learning models. Different algorithms are applied towards achieving this aim, and broadly speaking, they are classified into three major types - each having its own pros and cons according to the usage.

3.6.1 Filter Methods

Filter methods assess each feature individually by measuring its relationship with the target variable. Features that show a strong correlation with the target are selected because this indicates they have some meaningful connection and can contribute to making accurate predictions. These methods are typically applied during the pre-processing stage to eliminate irrelevant or redundant features. The selection is based on statistical tests, such as correlation measures, or other criteria, helping to streamline the dataset before training the model.

3.6.2. Wrapper Methods

Wrapper methods can also be known as greedy algorithms that train algorithm. They employ various combinations of features and calculate the relationship between these subset features and a target variable and on the basis of the conclusion addition and removal of features is carried out. Stopping criteria are typically present by the individual who is

training the model like when the performance of the model declines or when a particular number of features has been hit.

3.6.3 Embedded Methods

In feature selection, embedded methodologies undertake feature selection when training the model. They have the advantage of filter methods and wrapper methods. The model training incorporates the feature selection enabling the model to dynamically choose the most relevant features according to the training process.

As this study has a lot of features, so the feature selection is very crucial for selecting the best possible features. There are several feature selection methods like Mutual Information (MI), Lasso, Recursive Feature Elimination (RFE), Minimum Redundancy Maximum relevance (mRMR) etc. But in this study, filtered based mRMR method have been selected in this study.

Maximum Relevance Minimum Redundancy (mRMR)

The feature selection process based on the mRMR framework chooses features that are highly relevant to the target variable while being minimally redundant with each other. This means it prioritizes features that strongly relate to the outcome but have little overlap or similarity with other predictor features.

The mRMR algorithm works by calculating two measures for each feature: its relevance to the target and its redundancy with other features. It then assigns an importance score to each feature, often by taking the difference or ratio between relevance and redundancy. Features with the highest scores are selected for use in the model.

Originally, mRMR was introduced in bioinformatics to select important genes from microarray data. Later, it gained popularity in other fields like marketing, where it has been used to identify the most informative predictors for models. Formula of mRMR is given in equation (3):

$$J(x_k) = I(x_k; y) - \frac{1}{|S|} \sum_{x_j \in S} I(x_k; y) \tag{3}$$

Where, S is the subset of the chosen features, x_k is the candidate feature, and $J(x_k)$ is the evaluation index. 750 features are selected from 1152 features in case of DEAP dataset and 200 features are selected from 2549 in case of EEG Brainwave Dataset.

3.7 Emotion Classifier

Once the optimized features are selected from the feature matrix, the next crucial step in an emotion recognition system is the application of a classifier. A classifier is a computational model that learns patterns from labeled training data and assigns unseen samples into predefined emotional categories. In the context of EEG-based emotion recognition, the classifier serves as the decision-making unit that maps complex and high-dimensional EEG features into distinct emotional states.

3.7.1 Extended Long Short Term Memory (xLSTM)

To address these shortcomings of the conventional LSTM models, two significant improvements are implemented in the xLSTM framework [49]: exponential gating and new memory architectures. The framework illustrated in Fig.3.5 where the two new variants of LSTM are as a result of these improvements. The former, scalar LSTM (sLSTM), is a model that utilizes a lighter (scalar-based) memory and update mechanism, where the memory is mixed during update. The second, matrix LSTM (mLSTM) uses a matrix memory and a covariance-based rule of outer product updating. In erasing any recurring hidden to hidden connections, mLSTM erases memory mixing and becomes completely parallel. The two variants are dependent on exponential gating to reinforce the representational capacity. Also, the models can be generalized to several memory cells. sLSTM mixes across cells, and multi-head designs can be implemented, in which each head mixes and cell-mixes, but has its output still feature a single head. However, in contrast to mLSTM, mLsts have multiple heads and multiple cells that are mathematically identical, making scaling simpler. All these innovations give a more effective and adaptable alternative to the traditional LSTMs to sequence modeling.

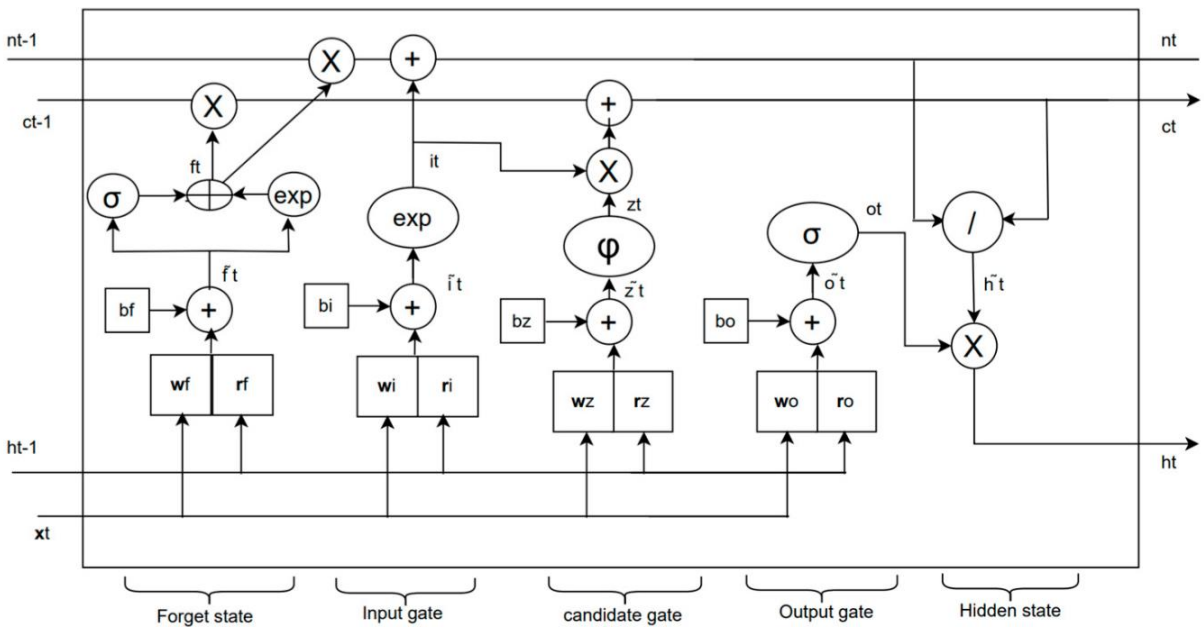

Fig 3.5 Illustration of overall xLSTM architecture [49]. .

3.7.1.1 Review of LSTM

In the original LSTM shown in Fig. 3.6, the scalar memory cell was a processing unit and storage unit which was proposed to address the vanishing gradient issue by preserving long-term dependencies via carousel of constant errors. Three gates are used to regulate the memory cell; input, output and forget gates, which determine the information flow. The input gate controls the amount of new information that is added into the cell, the forget gate controls how much information is forgotten and the output gate controls the amount of cell state that is added to the hidden state. Combinations of these mechanisms enable the LSTM to selectively refresh, hold or eliminate information with time, and this is why it is applicable in modeling sequential and non-stationary data like EEG signals. The rules of update of the LSTM memory cell at time step t are given in equation (1) - (9) as:

$$c_t = f_t \cdot c_{t-1} + i_t \cdot z_t \tag{4}$$

$$h_t = o_t \cdot \psi(c_t) \tag{5}$$

$$z_t = \varphi(\omega_z^\top x_t + r_z h_{t-1} + b_z) \tag{6}$$

$$i_t = \sigma(\omega_i^\top x_t + r_i h_{t-1} + b_i) \tag{7}$$

$$f_t = \sigma(\omega_f^\top x_t + r_f h_{t-1} + b_f) \tag{8}$$

$$o_t = \sigma(\omega_o^\top x_t + r_o h_{t-1} + b_o) \tag{9}$$

The weight vectors are described as $\omega_z, \omega_i, \omega_f$ and ω_o are the weights of input between the current input x_t and the cell input, input gate, forget gate and the output gate respectively. Likewise, the weights r_z, r_i, r_f and ro represent the recurrent weights between the last hidden state h_{t-1} and the respective parts of the LSTM unit. The related biases are the terms b_z, bi_i, b_f and b_o. The activation functions φ and ψ are usually set to hyperbolic tangent (tanh) functions and are operated upon the cell input and hidden state. The cell state is unbounded in nature so a squashing is used to ensure that the values of the cell state are normalized. The sigmoid function is used as an activation in all the gating mechanisms in the LSTM, including the input, forget, and output gates.

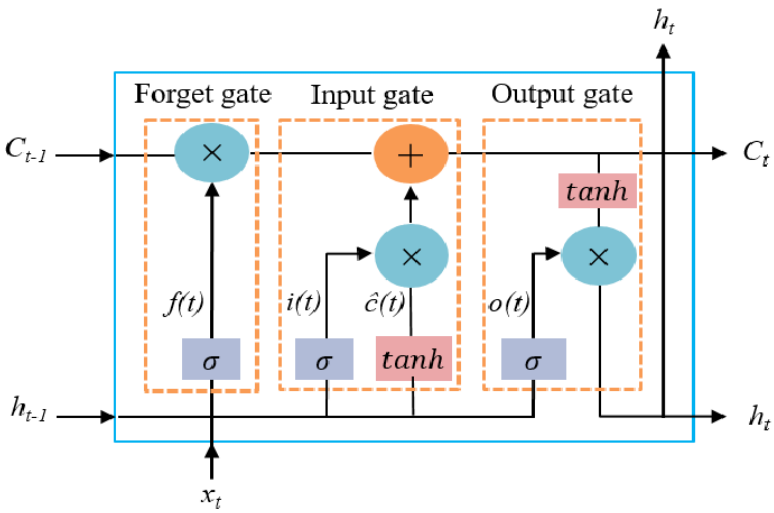

Fig. 3.6 Conventional LSTM model architecture [27].

3.7.1.2 Proposed xLSTM based Classifier

We have designed the emotion classification model using the xLSTM concept due to its enhanced memory capabilities and temporal flexibility compared to standard LSTM models. The xLSTM architecture extends the standard LSTM by introducing two key enhancements which are exponential gating and a diversified memory structure comprising both sLSTM and mLSTM. This modifications address critical limitations in conventional LSTM networks, such as limited memory flexibility and scalar storage bottlenecks which are crucial in brain signals.

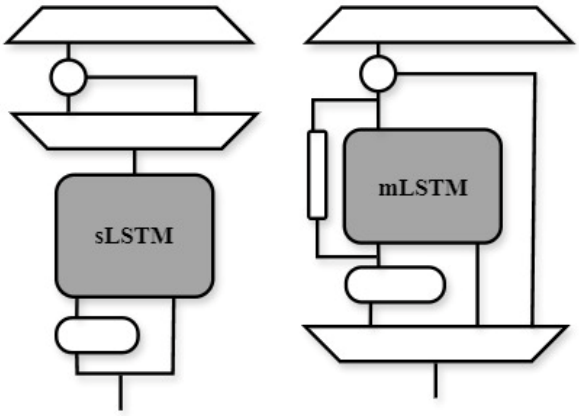

Fig. 3.7 Illustration of xLSTM-Blockstack having both sLSTM and mLSTM [49].

The sLSTM maintains the scalar memory structure of the classical LSTM but enriches it with exponential input and forget gates as well as a normalizer state to ensure stable learning. In both sLSTM and mLSTM, the input and forget gates are defined by using the exponential activation functions give in equation (10) and (11),

$$i_t = exp(\tilde{\iota_t}) \text{ and} \tag{10}$$

$$f_t = exp(\tilde{f_t}) \; or \; \sigma(\tilde{f_t}) \tag{11}$$

Where the pre-activation input gate $\tilde{\iota_t}$ is computed in equation (12) as:

$$\tilde{\iota_t} = \omega_i^{\top} x_t + r_i h_{t-1} + b_i \tag{12}$$

These gates allow the model to perform adaptive memory updates and even revise previously stored content—an essential feature for modeling the non-stationary dynamics of EEG signals. To stabilize exponential operations and avoid numerical overflow, a normalization state m_t defined in equation (13) is introduced which which leads to stabilized input and forget gate values in equation (14) and (15):

$$m_t = max(log\, f_t + m_{t-1}, log\, i_t) \tag{13}$$

$$i_t' = exp(\tilde{\iota_t} - m_t); \tag{14}$$

$$f_t' = exp(log\, f_t + m_{t-1} - m_t) \tag{15}$$

The matrix LSTM (mLSTM), on the other hand, addresses the limitation of storage capacity by extending the scalar memory into a full matrix representation. Instead of storing a single scalar value, the mLSTM maintains a memory matrix $C_t \in R_{d \times d}$ defined in

equation (16) which allows it to encode associations between key–value pairs in a manner reminiscent of associative memory models and attention mechanisms. This matrix is updated using a covariance-style outer product:

$$C_t = f_t \cdot C_{t-1} + i_t \cdot v_t k_t^{\top} \tag{16}$$

Where v_t and k_t are value and key vectors, respectively. The output is retrieved using a query vector q_t as follows:

$$h_t = o_t \cdot \left(\frac{C_t q_t}{\max(|n_t^{\top} q_t|, 1)} \right) \tag{17}$$

With a normalizer vector shown in equation (18) updated as:

$$n_t = f_t \cdot n_{\{t-1\}} + i_t \cdot k_t \tag{18}$$

This mechanism allows efficient, associative retrieval from memory while maintaining linear complexity in sequence length—a desirable property for EEG data with long temporal dependencies.

In contrast, the scalar-memory sLSTM retains a scalar cell state c_t , but introduces a normalizer n_t to improve output stability:

$$c_t = f_t \cdot c_{t-1} + i_t \cdot z_t \tag{19}$$

$$n_t = f_t \cdot n_{t-1} + i_t \tag{20}$$

$$h_t = o_t \cdot \frac{c_t}{n_t} \tag{21}$$

This configuration allows the model to maintain refined control over localized temporal dependencies and handle subtle transitions in emotional states.

The proposed model shown in Fig 3.8 applies an xLSTM layer with alternate mLSTM and sLSTM blocks to be effective in capturing long-term relationship and feature interaction of EEG signals. The stacked xLSTM blocks handle the sequences after feature projection and normalization followed by layer normalization and classification head, and the performance is measured by the accuracy, precision, recall, and F1-score.

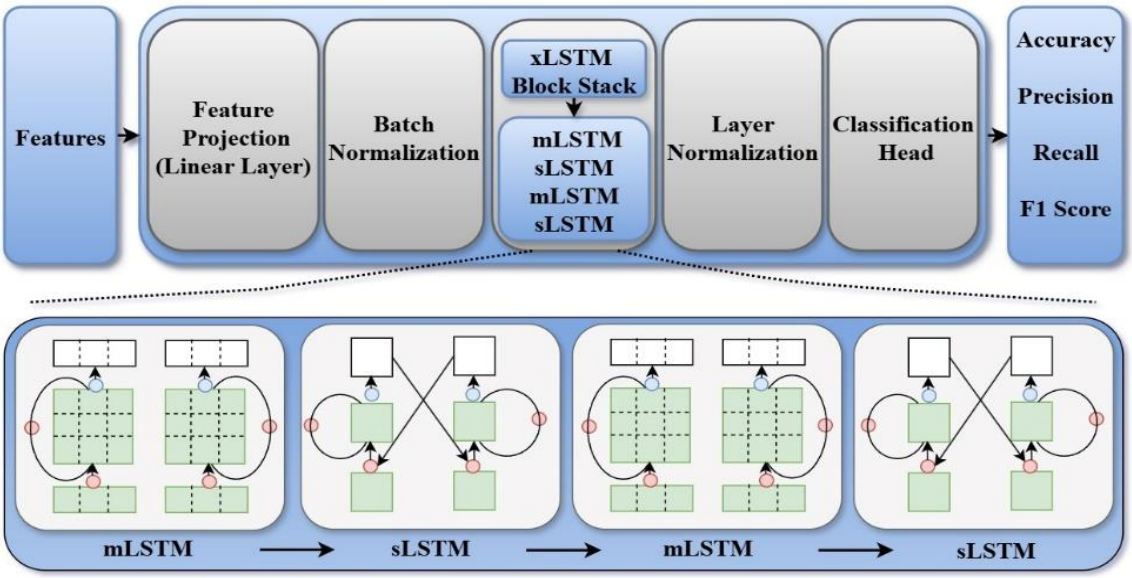

Fig. 3.8 Proposed emotion classification model.

An ablation study was conducted to empirically identify the optimal configuration of the xLSTM model in terms of architecture depth, attention heads, and memory structure. Hence, a linear transformation layer is used to convert the xLSTM block's output to a suitable feature space for emotion categorization across 3 heads for EEG Brainwave Dataset and 4 for DEAP dataset. The configuration and key hyperparameters of the xLSTM architecture for both datasets are detailed in Table 3.5. The internal key configurations of the mLSTM and sLSTM blocks are specified in Table 3.6. These parameters were finalized through ablation testing to ensure optimal performance. Various combinations were evaluated, and the selected setup yielded the best classification accuracy.

3.8 Hyperparameter Tuning in Deep Learning

Hyperparameters are the settings or external factors that control how a machine learning or deep learning model learns during training. Unlike model parameters such as weights and biases, which are learned automatically from data, hyperparameters must be chosen before training begins. Examples include the learning rate, batch size, number of epochs, optimizer type, weight decay etc. These values guide the optimization process, control how fast or slow the model learns, and determine how well it can generalize to new data.

3.9 Importance of Hyperparameter Tuning

The performance of a deep learning model is highly sensitive to the choice of hyperparameters. Poorly selected values may lead to underfitting, where the model fails to capture important patterns, or overfitting, where it performs well on training data but poorly on unseen data. Hyperparameter tuning is the process of systematically searching for the best combination of values to maximize accuracy and stability. Recent experiments in xLSTM models indicate that hyperparameter optimization is a key factor in model performance as learning rate, batch size, block count, and hidden dimensions have a direct impact on convergence, stability, and generalization. Unless appropriately tuned, the model can underfit by being unable to model temporal dependencies, or overfit by memorizing noise in EEG signals. These hyperparameters should be optimized carefully so as to make xLSTM a balance between memory capacity and computational efficiency, which eventually results to more accurate and reliable emotion classification.

The main parameters of the proposed xLSTM model to be employed to analyze DEAP and EEG Brainwave data are summarized in Table 3.5. The size of input, embedding dimension, and context length are those that signify the difference features dimensions and sequence lengths of both data sets, whereas the size of the output is that of the target emotion classes (four and three, respectively, in DEAP and EEG Brainwave). These environments were selected in order to trade between model complexity and each dataset properties.

Table 3.5 Key Parameters of the xLSTM Model for both EEG Brainwave Dataset and DEAP Dataset.

Parameter	**DEAP**	**EEG Brainwave Dataset**
	Value	**Value**
Input size	750	200
Embedded dimension	512	256
Context length	700	200
Output size	4	3

Table 3.6 Key Parameters of the xLSTM Model.

Parameter	DEAP	EEG Brainwave
	Value	Value
mLSTM		
Convolution kernel size	16	4
Projection block size	16	4
Number of heads	8	4
sLSTM		
Convolution kernel size	16	4
Number of heads	16	4
Feedforward Projection factor	9	9
Activation Function	GELU	GELU

The above table Table 3.6 presents the internal structure of the mLSTM and sLSTM blocks. In the case of the DEAP dataset, convolution kernel sizes, projection block sizes, and heads were increased in order to represent the more intricate temporal variations in longer EEG traces. However, the EEG Brainwave data utilized smaller size kernel and had less heads and this suffices due to its lower input dimensionality. Altogether, these tables underscore the way the xLSTM structure was designed to fit the datasets size and requirements.

3.10 Summary

An elaborate pipeline is used that comprises of four major steps. The DEAP EEG data is first filtered, reshaped, and segmented followed by annotation to form emotion-tagged data. Second, a wide range of features is obtained with time, frequency, nonlinear, and entropy to obtain complementary information on the signals. Third, the mRMR feature selection algorithm contains 1152 features as the baseline, then decides to select only 750 features that are the most relevant at the lowest possible redundancy rate. Lastly, xLSTM model is an xLSTM made by integrating mLSTM and sLSTM modules to capitalize on long-term temporal dependences and enhance the memory capacity. Additional hyperparameter optimization increases stability and accuracy. This pipeline demonstrates strength, scalability and flexibility among various EEG datasets

Chapter IV

Results and Discussions

4.1 Introduction

In this chapter, experimental setup and the proposed Extended Long Short Term Memory (xLSTM) framework is assessed on the basis of large-scale tests on two publicly available sets of EEG-data: the DEAP, one of the most frequently used EEG-based 4-class emotion recognition frameworks on the Valence-Arousal model, and the EEG Brainwave Dataset, a preprocessed set of 3-class emotion recognition datasets. The analysis encompasses various performance measures such as accuracy, precision, recall, F1-score, and confusion matrices, which have a comprehensive perspective of the quality of classification on the various classes. Also, training and validation accuracy/loss curves are examined in order to monitor the behavior of convergence and the presence of any overfitting tendencies. These results are obtained are systematically compared to conventional LSTM models and also with related state-of-the-art models found in the literature. The efficacy, robustness, and overallizability of the proposed xLSTM framework in various datasets and classification conditions have been noted with the help of these comparisons.

4.2 Experimental Setup

The implementation of the proposed methodology was carried out using a cloud-based environment to ensure faster training and testing of the model. Kaggle was used as the main platform because it provides free access to GPU acceleration, which is necessary for deep learning tasks. The GPU support allowed the model to train in a reasonable time compared to using only a CPU. The experiments were implemented in Python 3.11 with PyTorch as the deep learning framework

The hardware setup provided by the Kaggle platform included:

- GPU: NVIDIA Tesla T4 (2x15 GB VRAM)
- CPU: Intel Xeon processor
- RAM: 30 GB
- Storage: 57 GB

4.3 Evaluation Outcome of the Best Models

The two datasets that were used to assess the performance of the proposed xLSTM framework include the DEAP dataset and the EEG Brainwave dataset. The experimental design provided adequate data division according to training, validation, and testing to ensure that the hyperparameters were optimized by ablation studies. For DEAP the data split into 85% for training and 10% for the blind test set, with 10% of the training portion reserved for validation and for EEG Brainwave Dataset the data split into 85% for training and 15% for the blind test set, with 10% of the training portion reserved for validation.

The batch sizes were set to 20 and 60, with embedding dimensions of 256 and 512, respectively. In terms of architecture, the EEG Brainwave setup employed a two-block xLSTM stack, where the 1st one was mLSTM units and the 2nd one was sLSTM units, using a context length of 200. For the DEAP dataset, a deeper six-block xLSTM stack was used, with the 1st, 3rd, and 5th blocks as mLSTM units and the 2nd, 4th, and 6th blocks as sLSTM units, and a context length of 750.

The hyperparameters were tuned through trial and error to achieve optimal performance, and an ablation study confirmed that the Cross-Entropy loss function paired with the Adam optimizer yielded superior results. The learning rates were set to 0.0003 for the EEG Brainwave dataset and 0.0001 for the DEAP dataset. Model performance was evaluated using widely accepted classification metrics, namely Accuracy, Precision, Recall, and F1-score, which provided a comprehensive assessment of the system's effectiveness. The mathematical expression of these matrices are given in equation (21) - (24).

$$Accuracy = \frac{TP + TN}{TP + FP + TN + FN} \tag{22}$$

$$Precision = \frac{TP}{TP + FP} \tag{23}$$

$$Recall = \frac{TP}{TP + FN} \tag{24}$$

$$F1\ Score = \frac{2 * Precision * Recall}{Precision + Recall} \tag{25}$$

The True Positive (TP), False Positive (FP), True Negative (TN), and False Negative (FN) from the classifier are used to compute the matrices. TP and TN stand for accurate classifications in this case, FP for incorrectly labelled negatives as positives, and FN for falsely labelling positives as negatives.

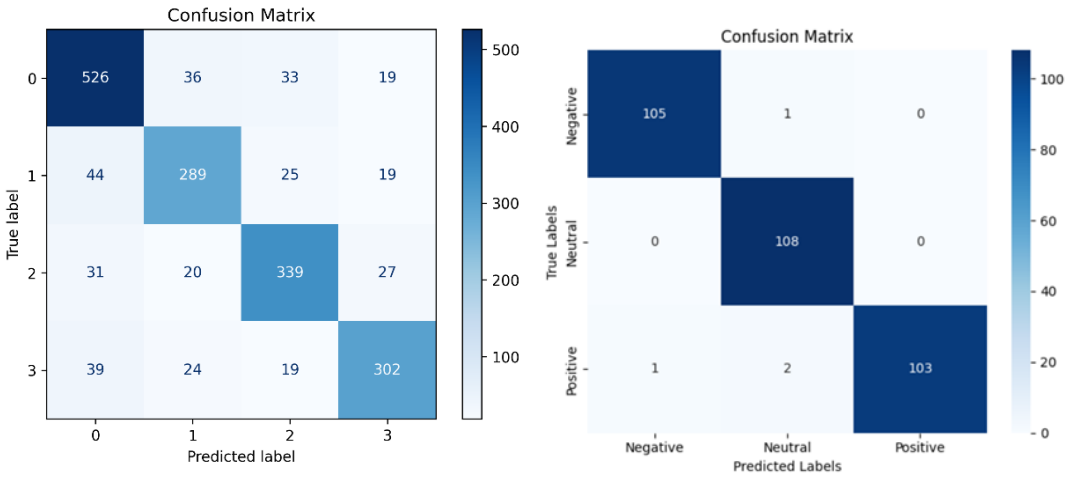

(a) (b)

Fig. 4.1 Confusion matrix of the xLSTM model for (a) DEAP (b) EEG Brainwave Dataset.

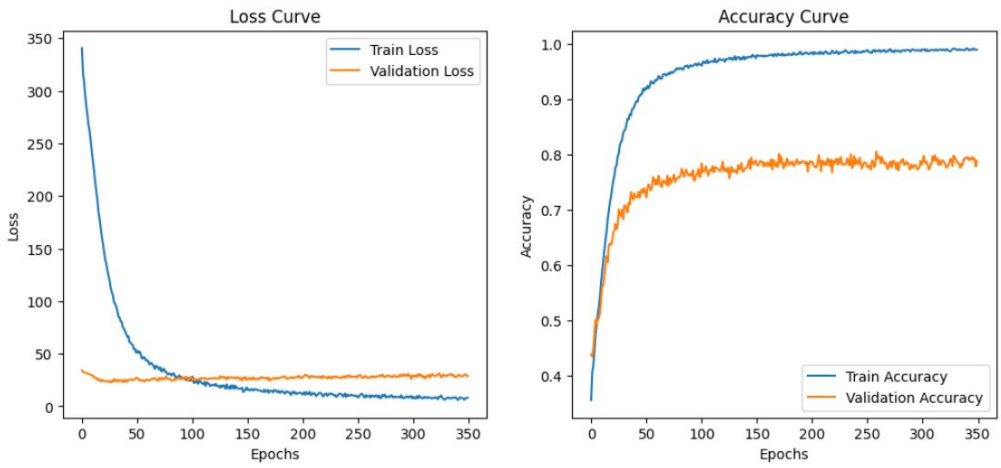

Fig. 4.2 Loss and accuracy curves during training and validation of the xLSTM model for DEAP.

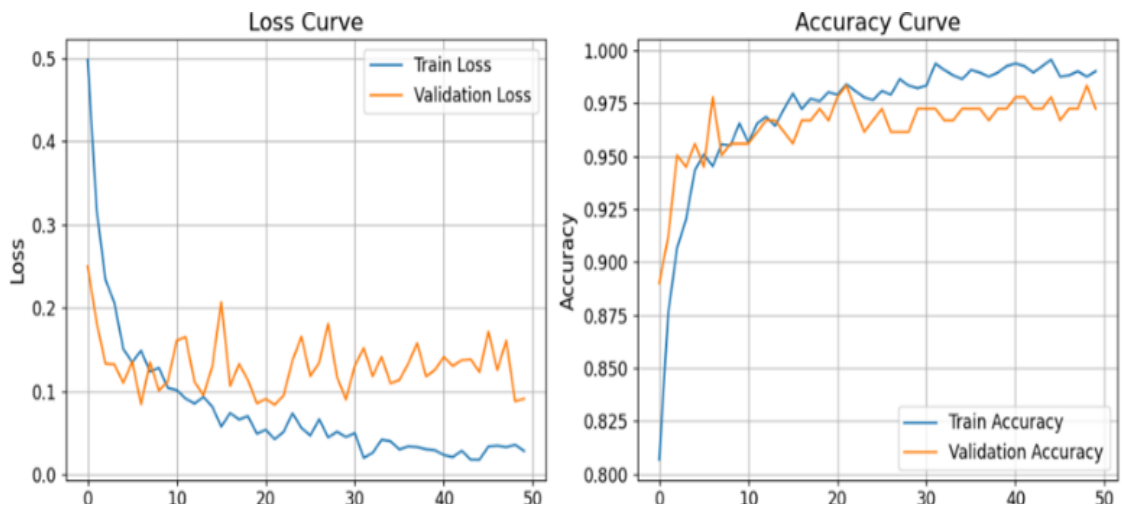

Fig. 4.3 Loss and accuracy curves during trainig and validation of the xLSTM model for EEG Brainwave dataset.

Fig. 4.1 shows the confusion matrices that point out the classification trends of the model. In the case of DEAP, the model performed well on separating the four emotion classes, albeit with misclassifications between High Valance High Arousal (HVHA), High Valance Low Arousal (HVLA), Low Valance High Arousal (LVHA) and Low valance Low Arousal (LVLA). It is in line with the natural overlapping between the neighboring quadrants of the valence arousal emotional space. Conversely, the EEG Brainwave data generated an almost ideal confusion matrix with slight errors made between the Positive and Negative states and with the Neutral state being identified perfectly.

The results are further broken down in Table 4.1 and Table 4.2. With the DEAP dataset, the model proposed had a general accuracy of 81.25% which is significantly better than the conventional approaches. HVHA recorded highest recall of 0.86 with F1-score of 0.84, but HVLA with lower score yet balanced performance in terms of precision and recall of 0.77. The F1-scores of the other two classes, LVHA and LVLA were consistent at 0.81 and 0.80 respectively. These findings affirm that the xLSTM system can allow the detection of fine-tuning emotional changes in EEG data even though the task of multiclass-classification is complicated.

Table 4.1 Detailed evaluation of the proposed xLSTM Model for DEAP Dataset.

Class	Precision	Recall	F1-Score	Support	Accuracy
HVHA	0.82	0.86	0.84	614	0.8125
HVLA	0.77	0.77	0.77	377	
LVHA	0.81	0.81	0.81	384	
LVLA	0.82	0.79	0.80	417	

The EEG Brainwave data was even more impressive. The overall accuracy of the proposed framework was 99.06, which is much higher than the baseline models. According to a class-wise evaluation, Negative emotions received a recall of 1.00 and F1-score of 0.99, Neutral emotions had perfect precision, recall and F1-score of 1.00, whereas Positive emotions had an F1-score of 0.99. Such results are a clear indication of the strength and the generalizability of xLSTM model in the case of preprocessed data.

Table 4.2 Detailed evaluation of the proposed xLSTM Model for EEG Brainwave Dataset.

Class	Precision	Recall	F1-Score	Support	Accuracy
Negative	0.97	1.00	0.99	106	0.9906
Neutral	1.00	1.00	1.00	108	
Positive	1.00	0.97	0.99	106	

The benefits of the suggested framework are more obvious when it is contrasted with the state-of-the-art works that are currently available. Shen et al. [43] achieved an accuracy of 74.22 per cent and Hu et al. [44] achieved an accuracy of 77.87 per cent on the DEAP dataset with a multi-scale frequency bands ensemble learning model and SVM classifier respectively. Comparatively, xLSTM framework scored 81.25, which is a new benchmark. On the same note, with the EEG Brainwave data, Alibrahim and Kurdi [46] achieved 94.21% accuracy with a GRU with attention and Pichandi et al. [45] reached 98.42% with a hybrid AlexNet+DenseNet-121+SVM model. The new state-of-the-art in this dataset was achieved by the proposed xLSTM model with an accuracy of 99.06.

4.4 Comparison with Related Works

In order to assess the efficiency of the proposed framework further, the comparative analysis is provided with some related works that are reported in the literature. The comparison mentions the works that utilized the DEAP dataset and implemented an assortment of machine learning and deep learning models. This analysis will prove the claims that the optimized feature pipeline and the xLSTM architecture achieve better results in terms of the accuracy of the multiclass emotion recognition task in addition to the constraints of traditional methods have been overcome. The demonstrated accuracies of the related works are summarized in Table 4.3 and Table 4.4 below and compared to those of the proposed approach.

Table 4.3 Comparison of The Proposed Framework with Related Works using DEAP Dataset.

Reference	Dataset	Model	Classes	Precision	Recall	F1-Score	Accuracy
Shen et al. [42]	DEAP	multi-scale frequency bands ensemble learning (MSFBEL)	HVHA	0.59	0.87	0.71	74.22%
			LVHA	0.82	0.68	0.74	
			LVLA	0.74	0.74	0.74	
			HVHA	0.84	0.59	0.69	
Hu et al. [43]	DEAP	SVM	HVHA	0.84	0.76	0.80	77.87%
			HVLA	0.80	0.83	0.82	
			LVHA	0.87	0.82	0.84	
			LVLA	0.62	0.69	0.65	
This study	**DEAP**	**xLSTM**	**HVHA**	**0.82**	**0.86**	**0.84**	**81.15%**
			HVLA	**0.77**	**0.77**	**0.77**	
			LVHA	**0.81**	**0.81**	**0.81**	
			LVLA	**0.82**	**0.79**	**0.80**	

Comparing the results of the abovementioned DEAP datasets, it can be stated that the suggested xLSTM framework demonstrates better accuracy than traditional LSTM and other advanced frameworks. Although the performance in binary classification was usually

good, the accuracy was usually poor in the 4-class problem (HVHA, HVLA, LVHA, LVLA). With the addition of a wide variety of streamlined features and the memory improvements of mLSTM and sLSTM modules, the proposed approach achieves an 81.25% accuracy, performing better than most of the state-of-the-art approaches. This establishes the strength of the framework to deal with complicated multiclass tasks of emotion recognition.

Table 4.4 Comparison 0f The Proposed Framework with Related Works using EEG Brainwave Dataset.

Reference	Dataset	Model	Classes	Precision	Recall	F1-Score	Accuracy
Alibrahim and Kurdi [45]	EEG Brainwave Dataset	GRU+Attention Mechanism	Positive	0.89	0.96	0.92	94.21%
			Neutral	1.00	0.99	0.99	
			Negative	0.94	0.88	0.91	
Pichandi et al. [44]	EEG Brainwave Dataset	AlexNet+ DenseNet-121+ SVM	Positive	0.98	0.97	0.97	98.42%
			Neutral	0.97	0.97	0.97	
			Negative	0.97	0.97	0.97	
This study	**EEG Brainwave Dataset**	**xLSTM**	**Positive**	**1.00**	**0.97**	**0.99**	**99.06%**
			Neutral	**1.00**	**1.00**	**1.00**	
			Negative	**0.97**	**1.00**	**0.99**	

As it is shown in Table 4.4, the proposed xLSTM model evidently performs better in comparison to the current ones on the EEG Brainwave data. Other competing models like CNN+SVM and GRU+Attention gave fairly decent results. However, the proposed framework was found to be excellent in terms of its accuracy 99.06%, which validates the effectiveness of the proposed framework in capturing emotional patterns in a 3-class environment. These findings indicate that the pipeline is robust and the xLSTM is appropriate in more general EEG emotion recognition scenarios.

The proposed framework gives a detailed manner of emotion recognition through the EEG by means of the combination of various feature domains and optimal selection using the mRMR algorithm. Finally incorporating the xLSTM model enables effective learning of temporal dependencies, providing a more robust and reliable solution for multiclass emotion recognition in affective computing.

The proposed system has some limitations even though it has a high accuracy and high performance. The DEAP data exhibited overfitting because of high dimensionality of features and variability of subjects. The xLSTM model is also more computationally intensive and can be limited in real-time application. In addition, the two datasets were obtained under controlled conditions and therefore there was need to test the model using larger and more heterogeneous real-world EEG data to provide better generalization.

In case of applications, this developed framework can be used in a number of fields that include human-computer interaction, mental health assessment, and affective computing. It facilitates adaptive systems that react to the emotions of users, facilitates learning and gaming with feelings and helps to monitor the state of mind. It is also expected to be useful in applications of emotion-sensitive brain computer interfaces and customized medical technologies.

4.5 Summary

To recognize emotion with the EEG, the given xLSTM structure was tested on two benchmark datasets. The six-block xLSTM performed 81.25% of 1792 samples in the blind test on the DEAP dataset, which was supported by high precision, recall, F1-score with the confusion matrix, demonstrating a balanced classification in four categories of emotion (HVHA, HVLA, LVHA, LVLA). The training and validation curves were converged well with a mild overfitting, and the performance was better in comparison to conventional models like CNN, BiLSTM, GRU, and hybrid models. The two Block xLSTM in the EEG Brainwave dataset was found to be astonishingly precise with a high accuracy of 99.06 on 2132 samples with three types of emotions (Positive, Neutral, Negative) and this is a high precision, recall, and F1-score rate. It was demonstrated that comparative experiments were clearly superior to GRU+Attention and CNN+SVM. All of the above findings indicate the effectiveness, versatility and overall applicability of the proposed xLSTM model to a variety of EEG-based emotion recognition tasks.

Chapter V

Conclusions

5.1 Conclusion

This thesis introduced a multiclass EEG-based emotion recognition framework which consists of a hybrid of two modules, Matrix LSTM (mLSTM) and Scalar LSTM (sLSTM), with an extended LSTM (xLSTM) framework. The model had good results with multiple features extracted and using the Minimum Redundancy Maximum Relevance (mRMR) selection showing strong results, especially with the EEG Brainwave data with an accuracy of 99.06%. However, on the DEAP dataset, the overall accuracy was 81.25% meaning that, despite being higher than most of the currently published works, it indicated overfitting and a lack of generalization between subjects.

These findings suggest that xLSTM can be implemented with great potential in emotion recognition tasks, but it is essential to optimize the model and improve its architecture to make the most of the available opportunities on large and noisy data, such as in the case of DEAP. Robustness could be improved with enhanced regularization, structures of hybrid deep learning and well-tuned hyperparameter methods. It is also possible that future research will investigate the cross-subject generalization and real-time application to make the framework more realistic and applicable in the real-world emotion-aware systems.

5.2 Future Work

Though the proposed xLSTM model had competitive results, there are still a number of directions that can be improved. First, the problem of overfitting, especially on the DEAP data, should be resolved through the introduction of more robust regularization algorithms, including dropout, weight decay, and early stopping. Second, the model architecture may be improved with attention mechanisms, convolutional layers or graph based networks to provide a more realistic representation of the spatial and temporal dependencies of EEG signals. Third, automated search hyperparameter optimization can result in more robust configurations on various datasets.

The other direction of interest is the study of cross subject and cross dataset generalization as in the real world we need models able to generalize to different persons without retraining that person. Also, the adoption of lightweight and efficient variants of xLSTM can open the way to having real-time emotion recognition systems in real human-computer interaction situations. Lastly, other signals like facial expressions, speech or other physiological data could be added to this work to expand the interpretation of emotion recognition using EEG to determine its reliability and practicality of the framework further.

References

[1] S. Liu *et al.*, "Study on an effective cross-stimulus emotion recognition model using EEGs based on feature selection and support vector machine," *Int. J. Mach. Learn. & Cyber.*, vol. 9, no. 5, pp. 721–726, May 2018, doi: 10.1007/s13042-016-0601-4.

[2] L. Kessous, G. Castellano, and G. Caridakis, "Multimodal emotion recognition in speech-based interaction using facial expression, body gesture and acoustic analysis," *J Multimodal User Interfaces*, vol. 3, no. 1–2, pp. 33–48, Mar. 2010, doi: 10.1007/s12193-009-0025-5.

[3] Y. Gao, X. Wang, T. Potter, J. Zhang, and Y. Zhang, "Single-trial EEG emotion recognition using Granger Causality/Transfer Entropy analysis," *Journal of Neuroscience Methods*, vol. 346, p. 108904, Dec. 2020, doi: 10.1016/j.jneumeth.2020.108904.

[4] L. Shu *et al.*, "A Review of Emotion Recognition Using Physiological Signals," *Sensors*, vol. 18, no. 7, p. 2074, June 2018, doi: 10.3390/s18072074.

[5] E. L. Van Den Broek, "Ubiquitous emotion-aware computing," *Pers Ubiquit Comput*, vol. 17, no. 1, pp. 53–67, Jan. 2013, doi: 10.1007/s00779-011-0479-9.

[6] J. A. Russell, "A circumplex model of affect.," *Journal of Personality and Social Psychology*, vol. 39, no. 6, pp. 1161–1178, Dec. 1980, doi: 10.1037/h0077714.

[7] M. K. Chowdary, J. Anitha, and D. J. Hemanth, "Emotion Recognition from EEG Signals Using Recurrent Neural Networks," *Electronics*, vol. 11, no. 15, p. 2387, July 2022, doi: 10.3390/electronics11152387.

[8] F. Mattioli, C. Porcaro, and G. Baldassarre, "A 1D CNN for high accuracy classification and transfer learning in motor imagery EEG-based brain-computer interface," *J. Neural Eng.*, vol. 18, no. 6, p. 066053, Dec. 2021, doi: 10.1088/1741-2552/ac4430.

[9] Y. Liu and O. Sourina, "Real-Time Fractal-Based Valence Level Recognition from EEG," in *Transactions on Computational Science XVIII*, vol. 7848, M. L. Gavrilova,

C. J. K. Tan, and A. Kuijper, Eds., in Lecture Notes in Computer Science, vol. 7848. , Berlin, Heidelberg: Springer Berlin Heidelberg, 2013, pp. 101–120. doi: 10.1007/978-3-642-38803-3_6.

[10] P. C. Petrantonakis and L. J. Hadjileontiadis, "Emotion Recognition From EEG Using Higher Order Crossings," *IEEE Trans. Inform. Technol. Biomed.*, vol. 14, no. 2, pp. 186–197, Mar. 2010, doi: 10.1109/TITB.2009.2034649.

[11] X. Zhang *et al.*, "Emotion Recognition From Multimodal Physiological Signals Using a Regularized Deep Fusion of Kernel Machine," *IEEE Trans. Cybern.*, vol. 51, no. 9, pp. 4386–4399, Sept. 2021, doi: 10.1109/TCYB.2020.2987575.

[12] R.-N. Duan, J.-Y. Zhu, and B.-L. Lu, "Differential entropy feature for EEG-based emotion classification," in *2013 6th International IEEE/EMBS Conference on Neural Engineering (NER)*, San Diego, CA, USA: IEEE, Nov. 2013, pp. 81–84. doi: 10.1109/NER.2013.6695876.

[13] Y. Gao, X. Sun, M. Meng, and Y. Zhang, "EEG emotion recognition based on enhanced SPD matrix and manifold dimensionality reduction," *Computers in Biology and Medicine*, vol. 146, p. 105606, July 2022, doi: 10.1016/j.compbiomed.2022.105606.

[14] Wei-Long Zheng and Bao-Liang Lu, "Investigating Critical Frequency Bands and Channels for EEG-Based Emotion Recognition with Deep Neural Networks," *IEEE Trans. Auton. Mental Dev.*, vol. 7, no. 3, pp. 162–175, Sept. 2015, doi: 10.1109/TAMD.2015.2431497.

[15] C. Li, Z. Zhang, X. Zhang, G. Huang, Y. Liu, and X. Chen, "EEG-based Emotion Recognition via Transformer Neural Architecture Search," *IEEE Trans. Ind. Inf.*, vol. 19, no. 4, pp. 6016–6025, Apr. 2023, doi: 10.1109/TII.2022.3170422.

[16] C. Li, X. Lin, Y. Liu, R. Song, J. Cheng, and X. Chen, "EEG-Based Emotion Recognition via Efficient Convolutional Neural Network and Contrastive Learning," *IEEE Sensors J.*, vol. 22, no. 20, pp. 19608–19619, Oct. 2022, doi: 10.1109/JSEN.2022.3202209.

[17] X. Lin, J. Chen, W. Ma, W. Tang, and Y. Wang, “EEG emotion recognition using improved graph neural network with channel selection,” *Computer Methods and Programs in Biomedicine*, vol. 231, p. 107380, Apr. 2023, doi: 10.1016/j.cmpb.2023.107380.

[18] C. Li, Z. Zhang, X. Zhang, G. Huang, Y. Liu, and X. Chen, “EEG-based Emotion Recognition via Transformer Neural Architecture Search,” *IEEE Trans. Ind. Inf.*, vol. 19, no. 4, pp. 6016–6025, Apr. 2023, doi: 10.1109/TII.2022.3170422.

[19] M. A. Maria, M. A. H. Akhand, A. B. M. A. Hossain, Md. A. S. Kamal, and K. Yamada, “A Comparative Study on Prominent Connectivity Features for Emotion Recognition From EEG,” *IEEE Access*, vol. 11, pp. 37809–37831, 2023, doi: 10.1109/ACCESS.2023.3264845.

[20] J. Chen, C. Min, C. Wang, Z. Tang, Y. Liu, and X. Hu, “Electroencephalograph-Based Emotion Recognition Using Brain Connectivity Feature and Domain Adaptive Residual Convolution Model,” *Front. Neurosci.*, vol. 16, p. 878146, June 2022, doi: 10.3389/fnins.2022.878146.

[21] M. A. H. Akhand, M. A. Maria, M. A. S. Kamal, and K. Murase, “Improved EEG-based emotion recognition through information enhancement in connectivity feature map,” *Sci Rep*, vol. 13, no. 1, p. 13804, Aug. 2023, doi: 10.1038/s41598-023-40786-2.

[22] S. Abdumalikov, J. Kim, and Y. Yoon, “Performance Analysis and Improvement of Machine Learning with Various Feature Selection Methods for EEG-Based Emotion Classification,” *Applied Sciences*, vol. 14, no. 22, p. 10511, Nov. 2024, doi: 10.3390/app142210511.

[23] Z.-M. Wang, S.-Y. Hu, and H. Song, “Channel Selection Method for EEG Emotion Recognition Using Normalized Mutual Information,” *IEEE Access*, vol. 7, pp. 143303–143311, 2019, doi: 10.1109/ACCESS.2019.2944273.

[24] H. Yang, S. Huang, S. Guo, and G. Sun, “Multi-Classifier Fusion Based on MI–SFFS for Cross-Subject Emotion Recognition,” *Entropy*, vol. 24, no. 5, p. 705, May 2022, doi: 10.3390/e24050705.

[25] F. Yang, X. Zhao, W. Jiang, P. Gao, and G. Liu, “Multi-method Fusion of Cross-Subject Emotion Recognition Based on High-Dimensional EEG Features,” *Front. Comput. Neurosci.*, vol. 13, p. 53, Aug. 2019, doi: 10.3389/fncom.2019.00053.

[26] S. Liu *et al.*, “Study on an effective cross-stimulus emotion recognition model using EEGs based on feature selection and support vector machine,” *Int. J. Mach. Learn. & Cyber.*, vol. 9, no. 5, pp. 721–726, May 2018, doi: 10.1007/s13042-016-0601-4.

[27] Md. R. Islam *et al.*, “Emotion Recognition From EEG Signal Focusing on Deep Learning and Shallow Learning Techniques,” *IEEE Access*, vol. 9, pp. 94601–94624, 2021, doi: 10.1109/ACCESS.2021.3091487.

[28] R. D. Gaddanakeri, M. M. Naik, S. Kulkarni, and P. Patil, “Analysis of EEG Signals in the DEAP Dataset for Emotion Recognition using Deep Learning Algortihms,” in *2024 IEEE 9th International Conference for Convergence in Technology (I2CT)*, Pune, India: IEEE, Apr. 2024, pp. 1–7. doi: 10.1109/I2CT61223.2024.10543369.

[29] M. K. Chowdary, J. Anitha, and D. J. Hemanth, “Emotion Recognition from EEG Signals Using Recurrent Neural Networks,” *Electronics*, vol. 11, no. 15, p. 2387, July 2022, doi: 10.3390/electronics11152387.

[30] H. Yang, S. Huang, S. Guo, and G. Sun, “Multi-Classifier Fusion Based on MI–SFFS for Cross-Subject Emotion Recognition,” *Entropy*, vol. 24, no. 5, p. 705, May 2022, doi: 10.3390/e24050705.

[31] A. Iyer, S. S. Das, R. Teotia, S. Maheshwari, and R. R. Sharma, “CNN and LSTM based ensemble learning for human emotion recognition using EEG recordings,” *Multimed Tools Appl*, vol. 82, no. 4, pp. 4883–4896, Feb. 2023, doi: 10.1007/s11042-022-12310-7.

[32] T. Dhara, P. K. Singh, and M. Mahmud, “A Fuzzy Ensemble-Based Deep learning Model for EEG-Based Emotion Recognition,” *Cogn Comput*, vol. 16, no. 3, pp. 1364–1378, May 2024, doi: 10.1007/s12559-023-10171-2.

[33] M. Algarni, F. Saeed, T. Al-Hadhrami, F. Ghabban, and M. Al-Sarem, “Deep Learning-Based Approach for Emotion Recognition Using Electroencephalography

(EEG) Signals Using Bi-Directional Long Short-Term Memory (Bi-LSTM)," *Sensors*, vol. 22, no. 8, p. 2976, Apr. 2022, doi: 10.3390/s22082976.

[34] H. Oka, K. Ono, and A. Panagiotis, "Attention-Based PSO-LSTM for Emotion Estimation Using EEG," *Sensors*, vol. 24, no. 24, p. 8174, Dec. 2024, doi: 10.3390/s24248174.

[35] M. Asif, S. Mishra, M. T. Vinodbhai, and U. S. Tiwary, "Emotion Recognition Using Temporally Localized Emotional Events in EEG With Naturalistic Context: DENS# Dataset," *IEEE Access*, vol. 11, pp. 39913–39925, 2023, doi: 10.1109/ACCESS.2023.3266804.

[36] N. Ahmadzadeh Nobari Azar, N. Cavus, P. Esmaili, B. Sekeroglu, and S. Aşır, "Detecting emotions through EEG signals based on modified convolutional fuzzy neural network," *Sci Rep*, vol. 14, no. 1, p. 10371, May 2024, doi: 10.1038/s41598-024-60977-9.

[37] X. Zhang, X. Cheng, and H. Liu, "TPRO-NET: an EEG-based emotion recognition method reflecting subtle changes in emotion," *Sci Rep*, vol. 14, no. 1, p. 13491, June 2024, doi: 10.1038/s41598-024-62990-4.

[38] S. Pichandi, G. Balasubramanian, and V. Chakrapani, "Hybrid deep models for parallel feature extraction and enhanced emotion state classification," *Sci Rep*, vol. 14, no. 1, p. 24957, Oct. 2024, doi: 10.1038/s41598-024-75850-y.

[39] M. Karthiga, E. Suganya, S. Sountharrajan, B. Balusamy, and S. Selvarajan, "Eeg based smart emotion recognition using meta heuristic optimization and hybrid deep learning techniques," *Sci Rep*, vol. 14, no. 1, p. 30251, Dec. 2024, doi: 10.1038/s41598-024-80448-5.

[40] Z. Cheng, X. Bu, Q. Wang, T. Yang, and J. Tu, "EEG-based emotion recognition using multi-scale dynamic CNN and gated transformer," *Sci Rep*, vol. 14, no. 1, p. 31319, Dec. 2024, doi: 10.1038/s41598-024-82705-z.

[41] S. Asadzadeh, T. Yousefi Rezaii, S. Beheshti, and S. Meshgini, "Accurate emotion recognition using Bayesian model based EEG sources as dynamic graph

convolutional neural network nodes," *Sci Rep*, vol. 12, no. 1, p. 10282, June 2022, doi: 10.1038/s41598-022-14217-7.

[42] F. Shen, Y. Peng, W. Kong, and G. Dai, "Multi-Scale Frequency Bands Ensemble Learning for EEG-Based Emotion Recognition," *Sensors*, vol. 21, no. 4, p. 1262, Feb. 2021, doi: 10.3390/s21041262.

[43] S.-J. Hu, Z.-T. Liu, and X.-W. Ding, "Electroencephalogram Emotion Recognition Using Variational Modal Decomposition Based Dispersion Entropy Feature Extraction," in *2021 40th Chinese Control Conference (CCC)*, Shanghai, China: IEEE, July 2021, pp. 3323–3326. doi: 10.23919/CCC52363.2021.9549884.

[44] S. Pichandi, G. Balasubramanian, and V. Chakrapani, "Hybrid deep models for parallel feature extraction and enhanced emotion state classification," *Sci Rep*, vol. 14, no. 1, p. 24957, Oct. 2024, doi: 10.1038/s41598-024-75850-y.

[45] R. Alibrahim and H. Kurdi, "GANN: EEG-based Emotion Classification Using Context-Aware Gated Attention Neural Network," *Procedia Computer Science*, vol. 241, pp. 234–241, 2024, doi: 10.1016/j.procs.2024.08.032.

[46] S. Koelstra *et al.*, "DEAP: A Database for Emotion Analysis ;Using Physiological Signals," *IEEE Trans. Affective Comput.*, vol. 3, no. 1, pp. 18–31, Jan. 2012, doi: 10.1109/T-AFFC.2011.15.

[47] J. J. Bird, "Mental Emotional Sentiment Classification with an EEG- based Brain-Machine Interface," *DISP '*.

[48] H. Candra *et al.*, "Investigation of window size in classification of EEG-emotion signal with wavelet entropy and support vector machine," in *2015 37th Annual International Conference of the IEEE Engineering in Medicine and Biology Society (EMBC)*, Milan: IEEE, Aug. 2015, pp. 7250–7253. doi: 10.1109/EMBC.2015.7320065.