# Structure of the tagging system

## Structure of the component tagging

XXX — XXX — XXX — XXX

Main equipment area code | Equipment Valve Instrument abbreviation | Supply from switchboard | Numeric Sequence

Example
552 - TA - NON - 001

- 101
- Switchboard
- Tank
- Area pasteurization tank 2

301.TA.NON.1: where 301 = Digester (System number), TA = Tank (Equipment), NON = Mechanical object (No switchboard), 01 = Tank nr 1.
201.P.CSB2.05: where 201 = Manure/feeding (System number), P = Pump (Equipment), CSB2 = Electrical object (Distribution board), 05 = Pump nr 5.
901.AK.CSB1.03: where 901 = Control and automation (System number), AK = Sub-distribution board at subcontractor (Equipment), CSB1 = Electrical object (Distribution board), 03 = Cabinet nr 3.

| System: | System number: | |
|---|---|---|
| **Reception** | **100-199** | |
| Manure tank | | 100-109 |
| Fat/Liquid Substrate tank | | 110-119 |
| Dry Dosificator tank | | 120-129 |
| FeCl tank | | 130-139 |
| Glycerol tank | | 140-149 |
| Cereals silo | | 160-169 |
| Water tank | | 170-179 |
| LPG tank | | 180-189 |
| Beets and root crops | | 190-191 |
| **Feeding in** | **200-299** | |
| Manure feeding | | 200-209 |
| Fat/Liquid Substrate feeding | | 210-219 |
| Dry Dosificator | | 220-229 |
| FeCl feeding | | 230-239 |
| Glycerol feeding | | 240-249 |
| Pasteurization before digester | | 250 |
| Cereal feeding | | 260 |
| Water feeding | | 270 |
| Oxygen/air dozing | | 280 |
| Mixing tank | | 290 |
| **Digester** | **300-399** | |
| Primary Digester | | 300-309 |
| Secondary Digester | | 310-319 |
| Tertiary Digester | | 320-329 |
| Line X | | 3X0 |
| **Heating system** | **400-499** | |
| Heating system | | 400-449 |
| Cooling system | | 450-459 |
| **Feeding out** | **500-599** | |
| Pump | | 500 - 509 |
| Pasteurization after digester | | 550 |
| **Biofertilizer tank** | **600-699** | |
| Biofertilizer tank 1 | | 601 |
| Biofertilizer tank 2 | | 602 |
| Separation | | 610 - 619 |
| **Gas treatment** | **700-799** | |
| Components on general gas pipe | | 700 |
| Condensate pit | | 710 |
| Flare | | 720 |
| Upgrading unit/CHP/boiler | | 730 |
| Stripper air combustion | | 740 |
| RTO | | 750 |
| High pressure compressor station | | 760 |
| LNG plant | | 770 |
| Propane dosing | | 780 |
| **Support system** | **800-899** | |
| Instrument air | | 800 |
| Hydraulic system | | 805 |
| Water | | 810 |
| Backflow protection system | | 815 |
| Heat tracing cable | | 820 |
| Car wash | | 830 |
| Building/container | | 840 |
| Pumpwell | | 850 |
| Oil separator | | 860 |
| | | 870 |
| Dosing equipment | | 880 |
| Odour contro/ventilation system | | 890 |
| **Electrical and Control** | **900-999** | |
| Control and automation | | 900-949* |
| Server and IT | | 950* |
| Electrical power high voltage (>1000V) | | 980-989* |
| Electrical power low voltage | | 990-999* |

## Lines

| Description | Symbol |
|---|---|
| Subcontractor scope | |
| Boundary line | |
| Page connector | |
| Start pipe - Not linked to page | |
| End pipe - Not linked to page | |
| Fald/ Slope | |
| Insulation | |
| Electrical Heat tracing | |

| Pipe Spec list | Code |
|---|---|
| Carbon steel P235TR1 | CSTR |
| Carbon steel P235GH | CSGH |
| | |
| Preinsulated Carbon steel P235GH | CSGH-PRI |
| | |
| Stainless steel pipes 1.4304 | SS16 / SS16-P |
| | |
| PE100 SDR17 | PE17 |
| Preinsulated PE100 SDR17 | PE17-PRI |
| PE100 SDR11 | PE11 |
| | |
| PE pipes for ventilation | PEVE |
| | |
| PE Drain Pipes | PWW |
| | |
| Electrical Conduit And Piping | ELCP |
| | |
| Ventilation Steel | VENTS |
| Ventilation Plastic | VENTP |
| | |
| ? | Unknown |

## Bulding/Area/Tank

| Description | Code |
|---|---|
| Primary digester | PD |
| Secondary digester | SD |
| Digester storage | DST |
| Liquid manure tank | LMT |
| Liquid biomass tank | LBT |
| Outlet tank | OT |
| Blackwater tank | BWT |
| Tech building | TB |
| Admin building | ADB |
| Solid biomass building | SBB |
| Liquid biomass building | LBB |
| Plansilo | PS |
| Pump house | PH |
| Hygienization tanks | HYG |
| Flare | FLA |
| Stack | STA |
| Odour treatment facility | OD |
| Upgrade facility | UPG |
| Liquifaction facility | LIQ |
| Oil boiler | OB |
| Wood boiler | WB |
| Transformer | TR |

## Media code

| Media | Pipe color | RBG color | Code |
|---|---|---|---|
| Heat Return | | 0,37,245 | HR |
| Heat Supply | | 255,0,0 | HS |
| Heat Hot Return | | 255,223,127 | HHR |
| Heat Hot Supply | | 238,129,129 | HHS |
| Cooling Supply | | 0,255,183 | CS |
| Cooling Return | | 126,189,189 | CR |
| Black Water | | 36,39,132 | BW |
| CIP | | 253,53,223 | CIP |
| Process Water | | 170,170,255 | PW |
| Technical Water | | 69,78,104 | TW |
| Drinking Water | | 0,0,129 | DW |
| Drinking Water Hot | | 0,127,255 | DWH |
| Condensate | | 108,163,208 | CW |
| Steam | | 255,82,82 | ST |
| Steam Condensate | | 189,0,0 | STC |
| Liquid Manure (Slurry) | | 240,130,40 | LM |
| Liquid Biomass (Substrat) | | 128,0,255 | LB |
| Process Biomass | | 165,103,82 | PB |
| Hygienized Biomass | | 169,130,0 | HB |
| Recirculated Biomass | | 165,103,82 | RCB |
| Ferric Chloride FeCl | | 145,255,71 | FeCL |
| Ventilation Odour Treatment | | 199,199,199 | VOT |
| Ventilation Fresh Air | | 199,199,199 | VFA |
| Compressed Air | | 64,64,64 | CA |
| Oxygen | | 0,128,255 | O2 |
| Raw Biogas | | 255,255,0 | RB |
| Return/reject Gas | | 116,118,4 | RG |
| Nature Gas | | 0,255,127 | NG |
| Instrument Leader | | Green | N/A |

## Structure of the pipeline tagging system

The pipetag consists of various information about the pipe
Full pipeline tag as shown below

Size-PipeSpec-Area-Service (Medie)-Serial number

[100 PE17 201 LM 01]

Example

- 01: Two (2) digits. Starts with 01 [01]
- LM: Two (2) to four (4) characters (letters) [LM - Liquid manure]
- 201: Three (3) digits [201 - Manure feeding in tank 1]
- PE17: Pipe Spec name [PE17 - PE100 SDR17]
- 100: Pipe size DN indication for Metric pipes OD indication for PE-pipe [This example is OD 100 mm]

The pipe tag will be shown on the P&ID as follows: PipeSpec-Size / Area-Service-Serialnumber

Example of line tag notation on P&ID: PE17-110 / 201-LM-01

Line color corresponding to table above.
The part below the pipeline is the Unique Line Tag.
Unique Line Tag is generated automatically when creating complete Line Tag.
Unique Line Tag is used by the P3D system when designing pipes in the 3D model and when generating Isometrics.

| Rev. Nr.: | Rev. Dato: | Rev. Decription: |
|---|---|---|

Builder: ST1
Project: SLK
Subject: PID Legend
Rev. 6
Int.: MDC | QC.: CM | APP.: | Date: 15-10-2025

Project nr..: 1768
Drawing nr..:
PID Legend

LUNDSBY RENEWABLE SOLUTIONS
Lundsby Renewable Solutions A/S, Hjarbækvej 65, 8831 Løgstrup
Tlf.: +45 96 49 43 00 Info@lundsby.dk
This Drawing is subject to copywrite and may not be reproduced without permission from Lundsby Renewable Solutions A/S

FORMAT: A1

# Valves

## Hand valves

| Symbols | Code | Description |
|---|---|---|
| | HV | General valve |
| | HV | Ball valve |
| | HV | Butterfly valve |
| | HV | Globe valve |
| | HV | Three way valve |
| | HV | Ground covered valve |
| | BV | Balancing valve |

## Actuated valves / Regulating valves

| | | |
|---|---|---|
| M | MV/RV | Motor ball valve |
| M | MV/RV | Motor butterfly valve |
| | AV/RV | Pneumatic ball valve |
| | AV/RV | Pneumatic valve |
| | AV | Solenoid valve |

## Safety valves

| | | |
|---|---|---|
| | SV | Exhaust valve covers |
| | SV | Safety valve |
| | SV | Breather valve |

## Mechanical valves

| | | |
|---|---|---|
| | PV | Pressure holding valve |
| | CV | Check valve |
| | VV | Venting valve |

## Miscellaneous additional valve symbols

| | | |
|---|---|---|
| | | Operator lock mechanism |

# Equipment

## Pumps / Compressors / Blowers

| Symbols | Code | Description |
|---|---|---|
| | P | Pump (General) |
| | P | Positive displacement pump |
| | P | Helical rotor pump |
| | P | Centrifugal pump |
| | P | Peristaltic pump |
| | MC | Rotacut |
| | MC | Shredder |
| | FA | Blower |
| | CO | General compressor |

## Heating and Cooling

| | | |
|---|---|---|
| | HX | Heat exchanger - Shell & tube |
| | HX | Heat exchanger - plate |
| | HX | Heat exchanger - double pipe |
| | HX | Heating coil (in tank) |
| Heatpump | HS | Heatpump |

## Tank equipment

| | | |
|---|---|---|
| | AG | ISO Agitator - Propeller |
| | AG | Agitator |
| | LA | Light |
| | CA | Camera |
| | FH | Foam hatch |

## Filters and Vessels

| | | |
|---|---|---|
| | AT | General filter / Forfilter |
| | AT | General liquid |
| | AT | Drier - General |
| | F | Suction hood |
| EXP | EXP | Expansion tank |

## Equipment

| Symbols | Code | Description |
|---|---|---|
| | MX | Bio mixer |
| | MC | Premix |
| | CV | Debris lift unit |
| | CV | Screw conveyor |
| | CV | Belt conveyor |
| | CRA | Crane |
| | CH | ISO Stack - Chimney |
| | FL | Flare |
| | PD | Pulsation damper |
| | SP | Screw press |

## Tanks

| | | |
|---|---|---|
| | DT | Digester tank |
| | ST | Storage tank |
| | DT/ST | Storage tank with cover |
| | HT | Gas/Hyginisation tank |
| | TA | Buried tank |

# Piping

## Piping symbols

| Symbols | Code | Description |
|---|---|---|
| | N/A | Offpage connector |
| | N/A | Flange connection |
| | N/A | Blind flange |
| | NO | Truck nozzle |
| | NO | Funnel/Drain |
| | AS | Expansion joint |
| | SN | Strainer |
| | N/A | Going into the ground / Coming up from |
| | AJ | Concentric reducer |
| | AJ | Eccentric reducer |
| | AX | Sample point |
| | BS | Inline silencer |
| | BU | Electrical heat tracing |
| | N/A | Going though wall |

| Category | Numbers |
|---|---|
| Manual valves | 001-099 |
| Manual regulation valves | 101-199 |
| Pneumatic, electrical, solenoid | 201-299 |
| - | 301-399 |
| Check, Non-return valves | 401-499 |
| Drain, venting valves | 501-599 |
| Self-regulating valves (thermal/l | 601-699 |
| Instrument valves | 701-799 |
| - | 801-899 |
| Safety valves | 901-999 |

Revision clouds

# Instruments

## Description

Instruments will be tagged

XXX - XX - XXX - XXX
Main area code / Letter code / Switchboard / Numeric sequence

XX First letter
XX Succeeding letter
XX Numeric sequence

| Description | Example |
|---|---|
| Field instrument | TI 01 — Temperature indication 01 |
| Instrument with connection to control | LS 02 — Level switch 02 |

Instruments with succeeding letter T is an analog signal.
Instruments with succeeding letter S is a digital signal.

| Instruments | Abbreviation |
|---|---|
| Analyze Indicator | AI |
| Analyse Transmitter | AT |
| Energi Transmitter | ET |
| Flow Indicator | FI |
| Flow Transmitter | FT |
| Flow Switch | FS |
| Flow Transmitter | FT |
| General Switch | GS |
| Level Switch | LS |
| Level Indicator | LI |
| Level Transmitter | LT |
| Pressure Indicator | PI |
| Pressure Switch | PS |
| Pressure Transmitter | PT |
| Thermometer | TI |
| Temperature Transmitter | TT |
| Weight Transmitter | WT |

## Various instruments

| | | |
|---|---|---|
| | FT | Flow transmitter |
| | EM | Energy meter |
| | SI | Siren |
| M | M | Electric motor |
| AK | AK | Units with own switchboard |
| | K | Control box |

| Rev. Nr.: | Rev. Dato: | Rev. Beskrivelse: |
|---|---|---|

Builder: ST1
Project: SLK
Subject: PID legend 2
Rev. 6
Int.:MDC | QC: CM | APP.: | Date: 15-10-2025

Project nr.: 1768
Drawing nr.:
PID legend 2

LUNDSBY RENEWABLE SOLUTIONS
Lundsby Biogas A/S, Hjarbækvej 65, 8831 Løgstrup
Tlf.: +45 96 49 43 00 Info@lundsbybiogas.dk
Denne tegning er underlagt copyvrite op må ikke reproduceres uden tilladelse fra Lundsbybiogas A/S

FORMAT: A1

# Revision Overview

| Rev. nr. | PID nr. | Description | Rev. nr. | PID nr. | Description |
|---|---|---|---|---|---|
| 6 | 9601 | Drain valve added on slurry pipe | 6 | 9633 | Gas pipe from HYG tanks added |
| 6 | 9602 | Gas safety valve design changed | 6 | 9634 | Pipe size changed & flow meter added for boiler |
| 6 | 9603 | Gas safety valve design changed | 6 | 9635 | Wärtsillä connection changed |
| 6 | 9604 | Manifold design changed | 6 | 9637 | Oil tank & pump added |
| 6 | 9611 | Pump cabinet design changed | 6 | 9638 | Calorify design changed |
| 6 | 9613 | Gas safety valve design changed | 6 | 9641 | Calorify design changed |
| 6 | 9614 | Gas safety valve design changed | 6 | 9648 | Valve changed on water pipe |
| 6 | 9618 | Bypass with valves added | 6 | 9652 | Compressed air & oxygen design changed |
| 6 | 9616 | Gas safety valve design changed | | | |
| 6 | 9617 | Gas safety valve design changed | | | |
| 6 | 9619 | Gas safety valve design changed | | | |
| 6 | 9629 | Gas safety valve design changed | | | |
| 6 | 9630 | Gas safety valve design changed | | | |
| 6 | 9632 | truck nozzles added | | | |

| Rev. Nr.: | Rev. Date: | Rev. Decription: |
|---|---|---|

Builder: ST1
Project: SLK
Subject: Revision overview
Rev. 6
Int.: MDC | QC.: CM | APP.: | Date: 15-10-2025

LUNDSBY RENEWABLE SOLUTIONS
Lundsby Renewable Solutions A/S, Hjarbækvej 65, 8831 Løgstrup
Tlf.: +45 96 49 43 00 Info@lundsby.dk
This Drawing is subject to copywrite and may not be reproduced without permission from Lundsby Renewable Solutions A/S

Project nr..: 1768
Drawing nr..:
Rev. overview
FORMAT: A1

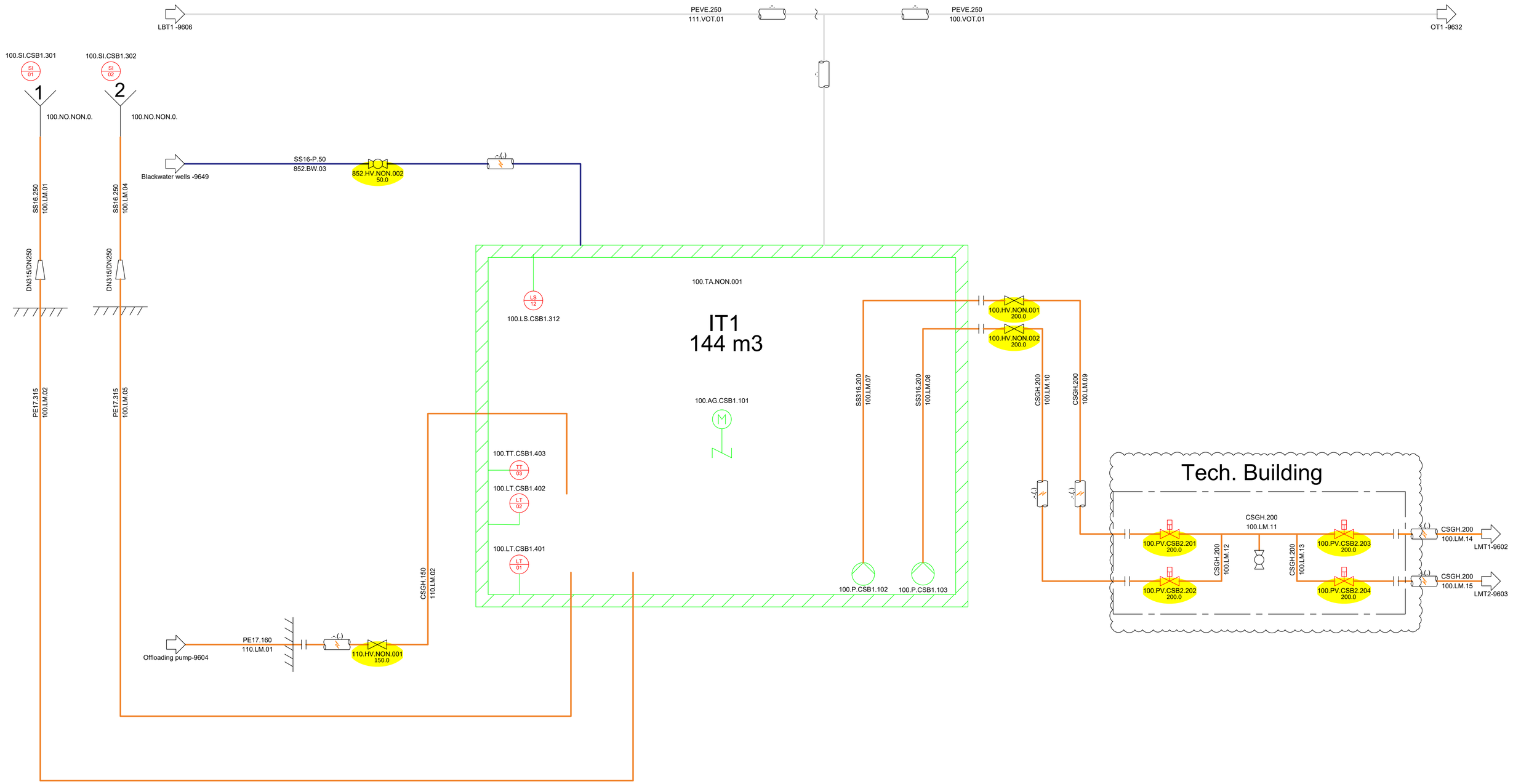


| Rev. Nr.: | Rev. Dato: | Rev. Decription: |
|---|---|---|

Builder: ST1

Project: SLK

Subject: Inlet tank 1

Rev. 6

Int.: MDC | QC.CM | APP.: | Date: 15-10-2025

Project nr..1768

Drawing nr..:

9601

LUNDSBY RENEWABLE SOLUTIONS

Lundsby Renewable Solutions A/S, Hjarbækvej 65, 8831 Løgstrup
Tlf.: +45 96 49 43 00 Info@lundsby.dk

This Drawing is subject to copywrite and may not be reproduced without permission from Lundsby Renewable Solutions A/S

FORMAT: A1

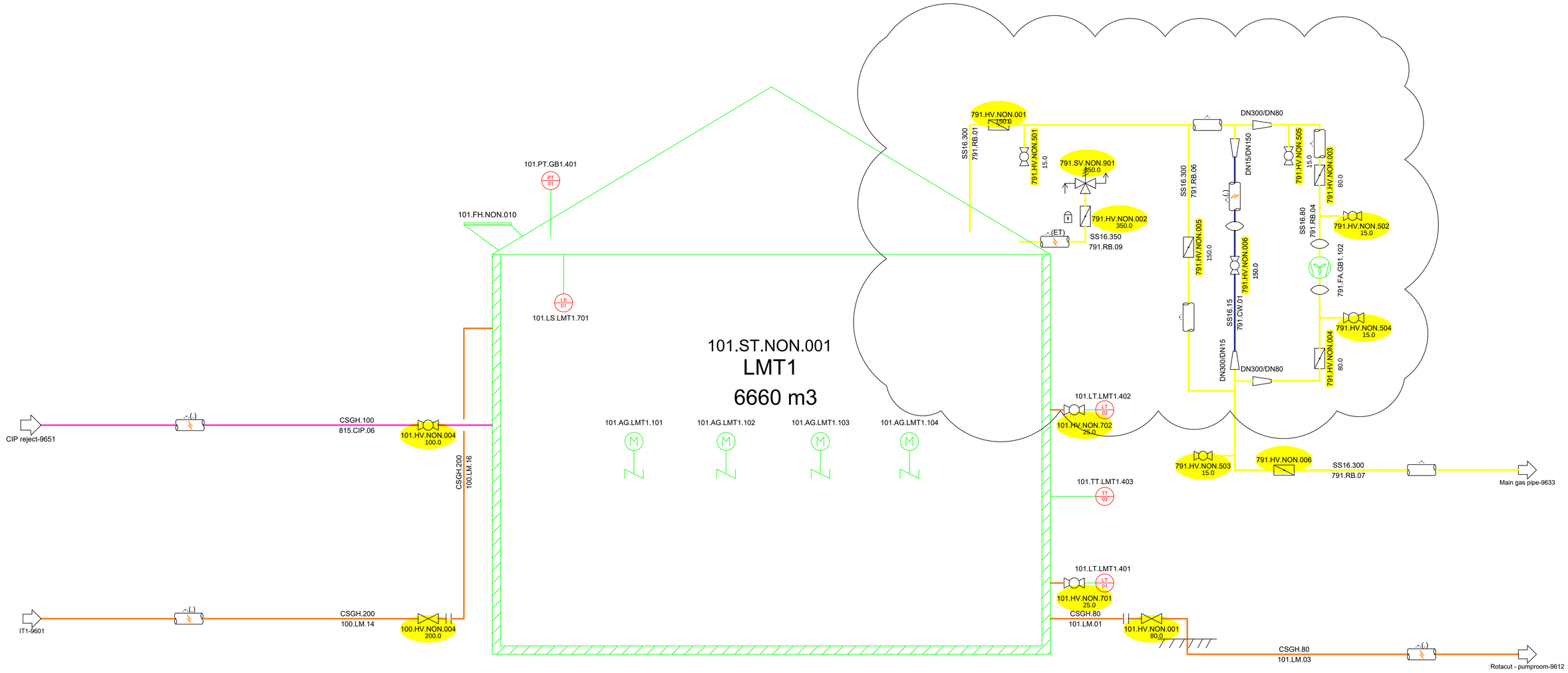


| Rev. Nr.: | Rev. Dato: | Rev. Decription: |
|---|---|---|

| | | | |
|---|---|---|---|
| Builder: | ST1 | | |
| Project: | SLK | | Project nr..1768 |
| Subject: | Liquid Manure Tank 1<br>Rev. 6 | | Drawing nr..:<br>9602 |
| Int.: MDC | QC.CM | APP.: | Date: 15-10-2025 |

LUNDSBY RENEWABLE SOLUTIONS

Lundsby Renewable Solutions A/S, Hjarbækvej 65, 8831 Løgstrup
Tlf.: +45 96 49 43 00 Info@lundsby.dk
This Drawing is subject to copywrite and may not be reproduced without permission from Lundsby Renewable Solutions A/S

FORMAT: A1

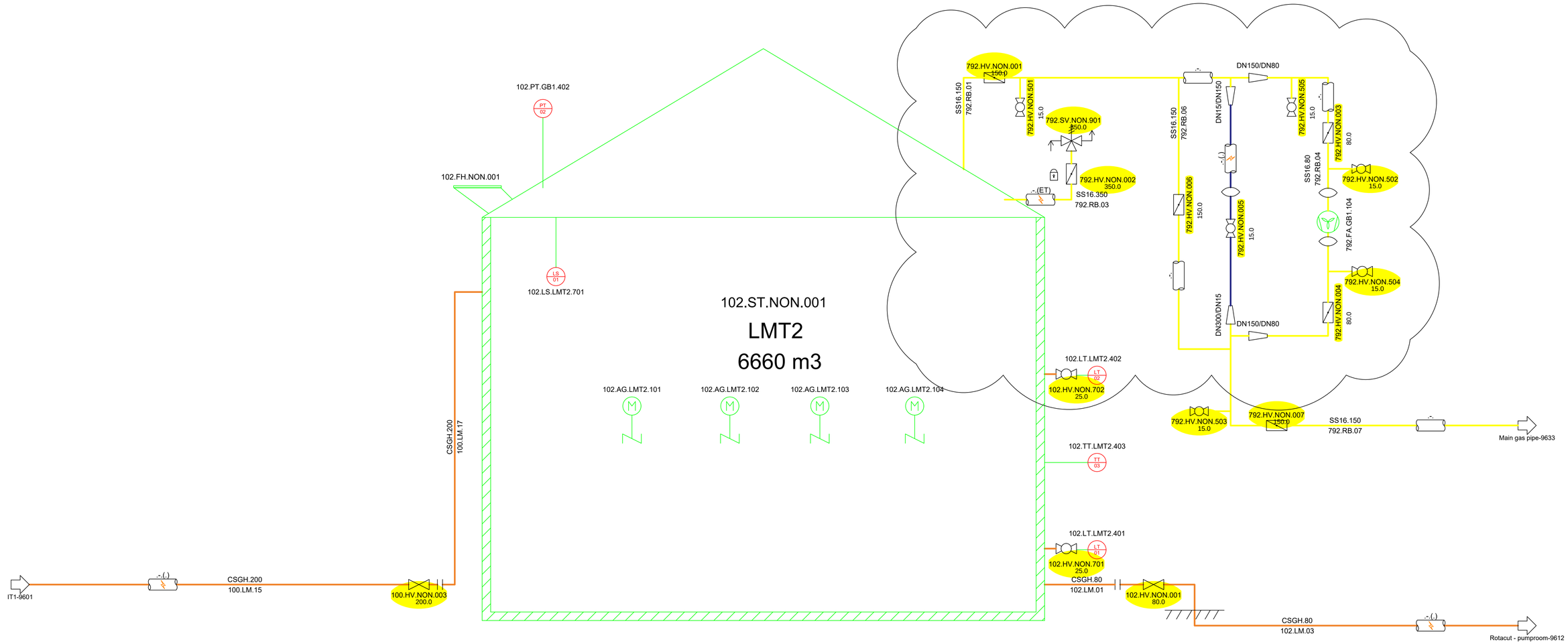


| Rev. Nr.: | Rev. Dato: | Rev. Decription: |
|---|---|---|

| | | | |
|---|---|---|---|
| Builder: | ST1 | | |
| Project: | SLK | | Project nr..1768 |
| Subject: | Liquid Manure Tank 2<br>Rev. 6 | | Drawing nr..:<br>9603 |
| Int.: MDC | QC.CM | APP.: | Date: 15-10-2025 |

LUNDSBY RENEWABLE SOLUTIONS

Lundsby Renewable Solutions A/S, Hjarbækvej 65, 8831 Løgstrup
Tlf.: +45 96 49 43 00 Info@lundsby.dk
This Drawing is subject to copywrite and may not be reproduced without permission from Lundsby Renewable Solutions A/S

FORMAT: A1

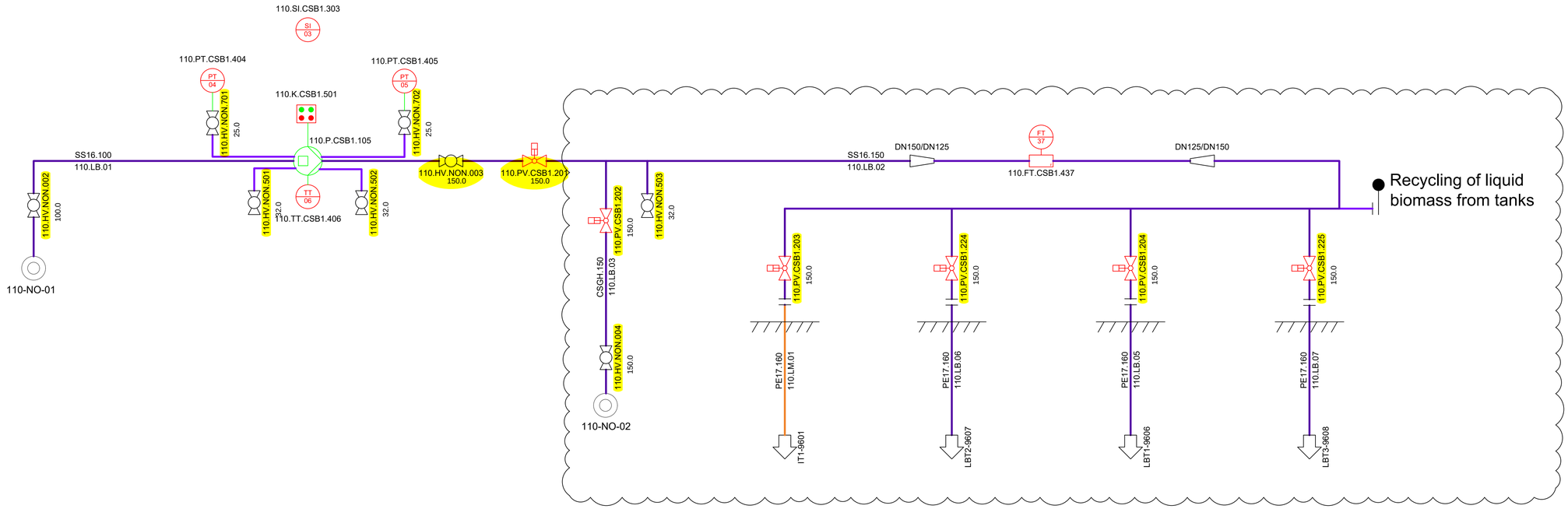


| Rev. Nr.: | Rev. Dato: | Rev. Decription: |
|---|---|---|

Builder: ST1

Project: SLK

Subject: Liquid biomass delivery pump
Rev. 6

Int.: MDC | QC.CM | APP.: | Date: 15-10-2025

Project nr..1768

Drawing nr..:
9604

FORMAT: A1

LUNDSBY RENEWABLE SOLUTIONS

Lundsby Renewable Solutions A/S, Hjarbækvej 65, 8831 Løgstrup
Tlf.: +45 96 49 43 00 Info@lundsby.dk
This Drawing is subject to copywrite and may not be reproduced without permission from Lundsby Renewable Solutions A/S

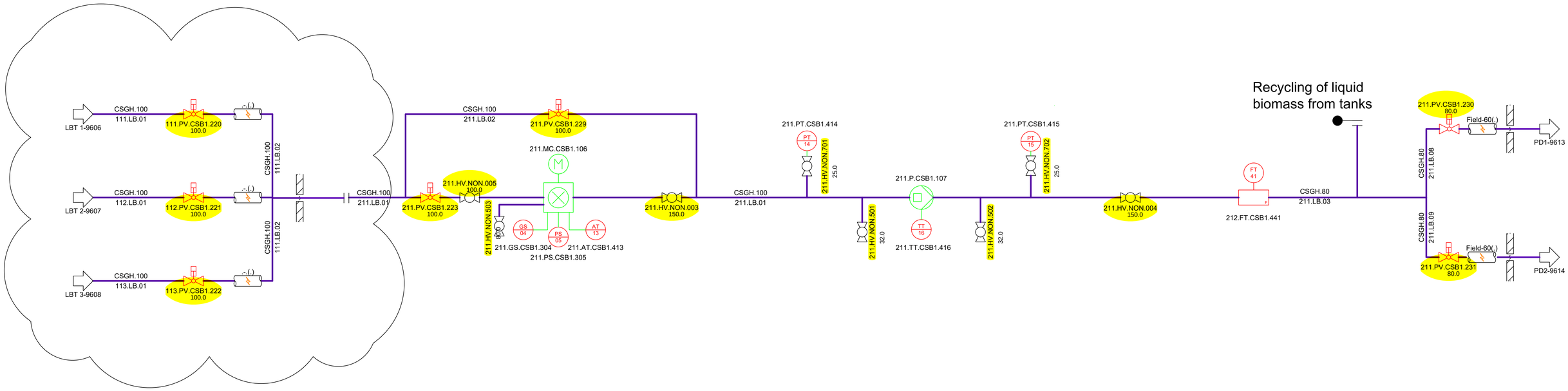


| Rev. Nr.: | Rev. Dato: | Rev. Decription: |
|---|---|---|

Builder: ST1

Project: SLK

Subject: Liquid biomass pump 1
Rev. 6

Int.: MDC | QC.CM | APP.: | Date: 15-10-2025

Project nr..1768

Drawing nr..:
9605

FORMAT: A1

LUNDSBY RENEWABLE SOLUTIONS
Lundsby Renewable Solutions A/S, Hjarbækvej 65, 8831 Løgstrup
Tlf.: +45 96 49 43 00 Info@lundsby.dk
This Drawing is subject to copywrite and may not be reproduced without permission from Lundsby Renewable Solutions A/S

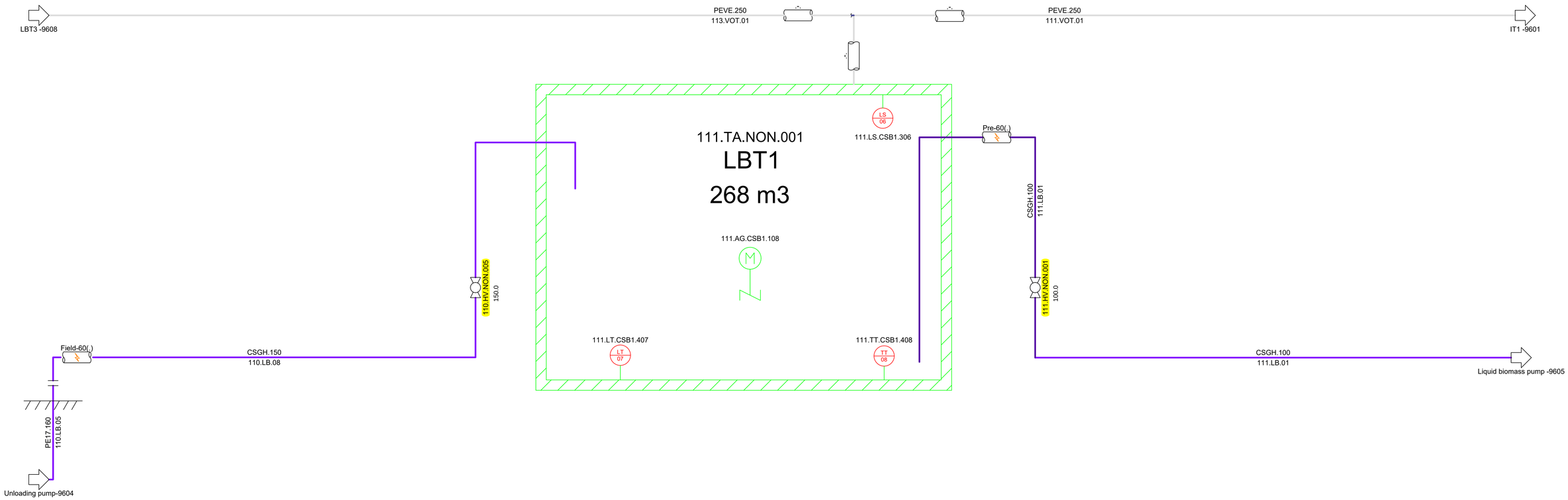


| Rev. Nr.: | Rev. Dato: | Rev. Decription: |
|---|---|---|

Builder: ST1

Project: SLK

Subject: Liquid biomass tank 1
Rev. 6

Int.: MDC | QC.CM | APP.: | Date: 15-10-2025

Project nr..1768

Drawing nr..:
9606

FORMAT: A1

LUNDSBY RENEWABLE SOLUTIONS
Lundsby Renewable Solutions A/S, Hjarbækvej 65, 8831 Løgstrup
Tlf.: +45 96 49 43 00 Info@lundsby.dk
This Drawing is subject to copywrite and may not be reproduced without permission from Lundsby Renewable Solutions A/S

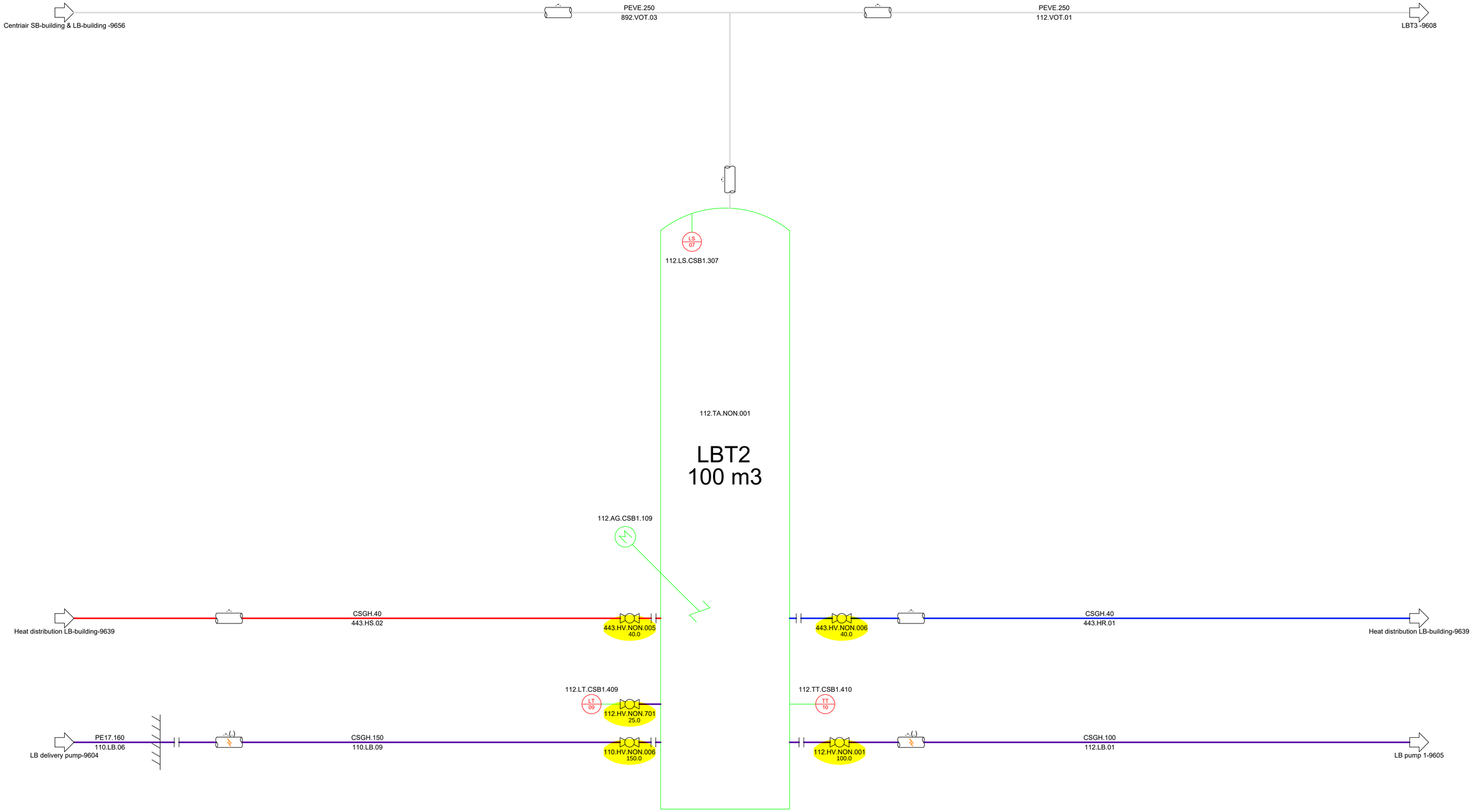


| Rev. Nr.: | Rev. Dato: | Rev. Decription: |
|---|---|---|
| | | |
| | | |
| | | |
| | | |

Builder: ST1

Project: SLK

Subject: Liquid biomass tank 2
Rev. 6

Int.: MDC | QC.CM | APP.: | Date: 15-10-2025

Project nr..1768

Drawing nr..:
9607

LUNDSBY RENEWABLE SOLUTIONS

Lundsby Renewable Solutions A/S, Hjarbækvej 65, 8831 Løgstrup
Tlf.: +45 96 49 43 00 Info@lundsby.dk
This Drawing is subject to copywrite and may not be reproduced without permission from Lundsby Renewable Solutions A/S

FORMAT: A1

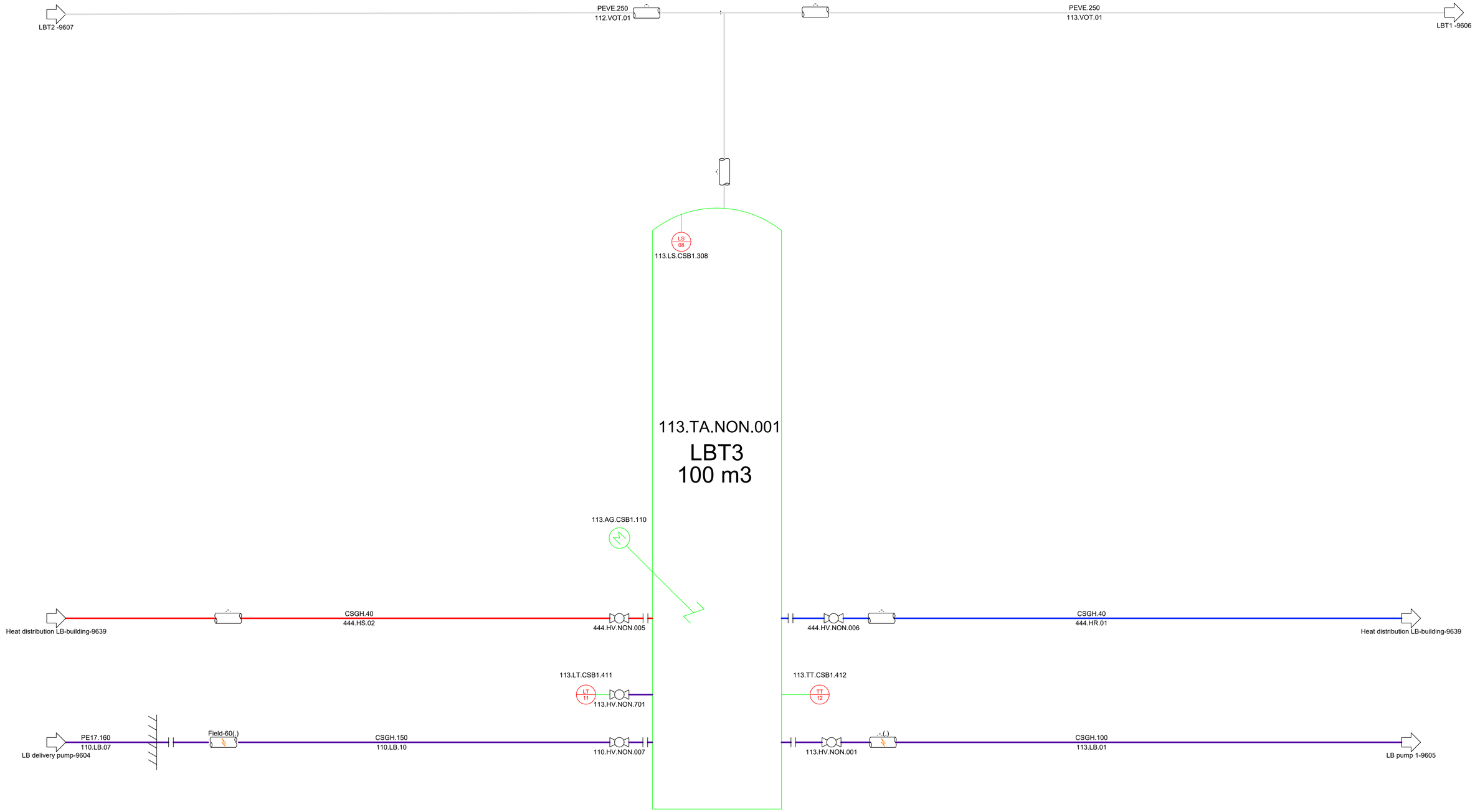


| Rev. Nr.: | Rev. Dato: | Rev. Decription: |
|---|---|---|

Builder: ST1

Project: SLK

Subject: Liquid biomass tank 3
Rev. 5

Int.: MDC | QC.CM | APP.: | Date: 01-10-2025

Project nr..1768

Drawing nr..:
9608

LUNDSBY RENEWABLE SOLUTIONS

Lundsby Renewable Solutions A/S, Hjarbækvej 65, 8831 Løgstrup
Tlf.: +45 96 49 43 00 Info@lundsby.dk
This Drawing is subject to copywrite and may not be reproduced without permission from Lundsby Renewable Solutions A/S

FORMAT: A1

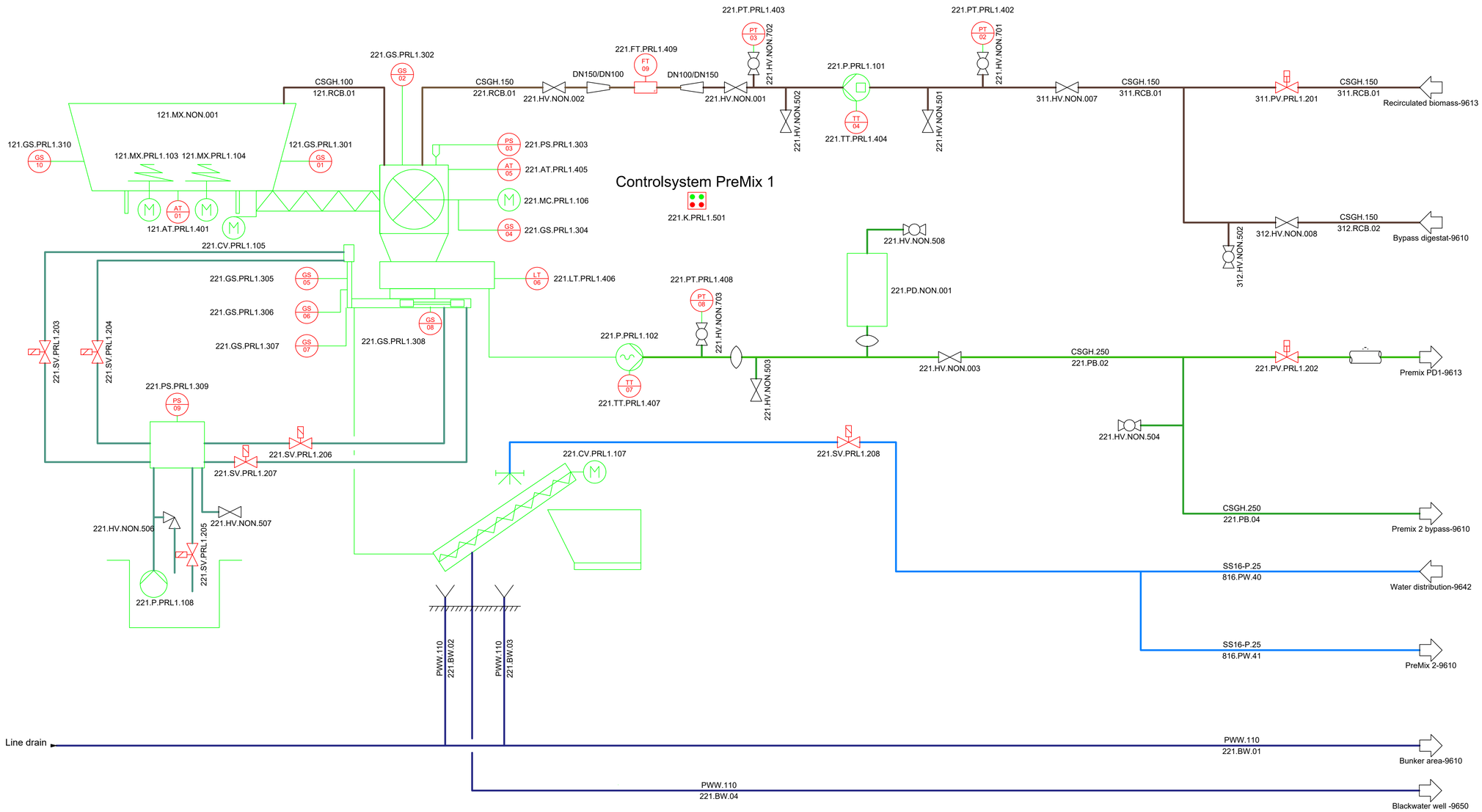


| Rev. Nr.: | Rev. Dato: | Rev. Decription: |
|---|---|---|

| | | | |
|---|---|---|---|
| Builder: | ST1 | | |
| Project: | SLK | | Project nr..:1768 |
| Subject: | Premix 1<br>Rev. 6 | | Drawing nr..:<br>9609 |
| Int.:MDC | QC.CM | APP.: | Date: 15-10-2025 |

LUNDSBY RENEWABLE SOLUTIONS

Lundsby Renewable Solutions A/S, Hjarbækvej 65, 8831 Løgstrup
Tlf.: +45 96 49 43 00 Info@lundsby.dk
This Drawing is subject to copywrite and may not be reproduced without permission from Lundsby Renewable Solutions A/S

FORMAT: A1

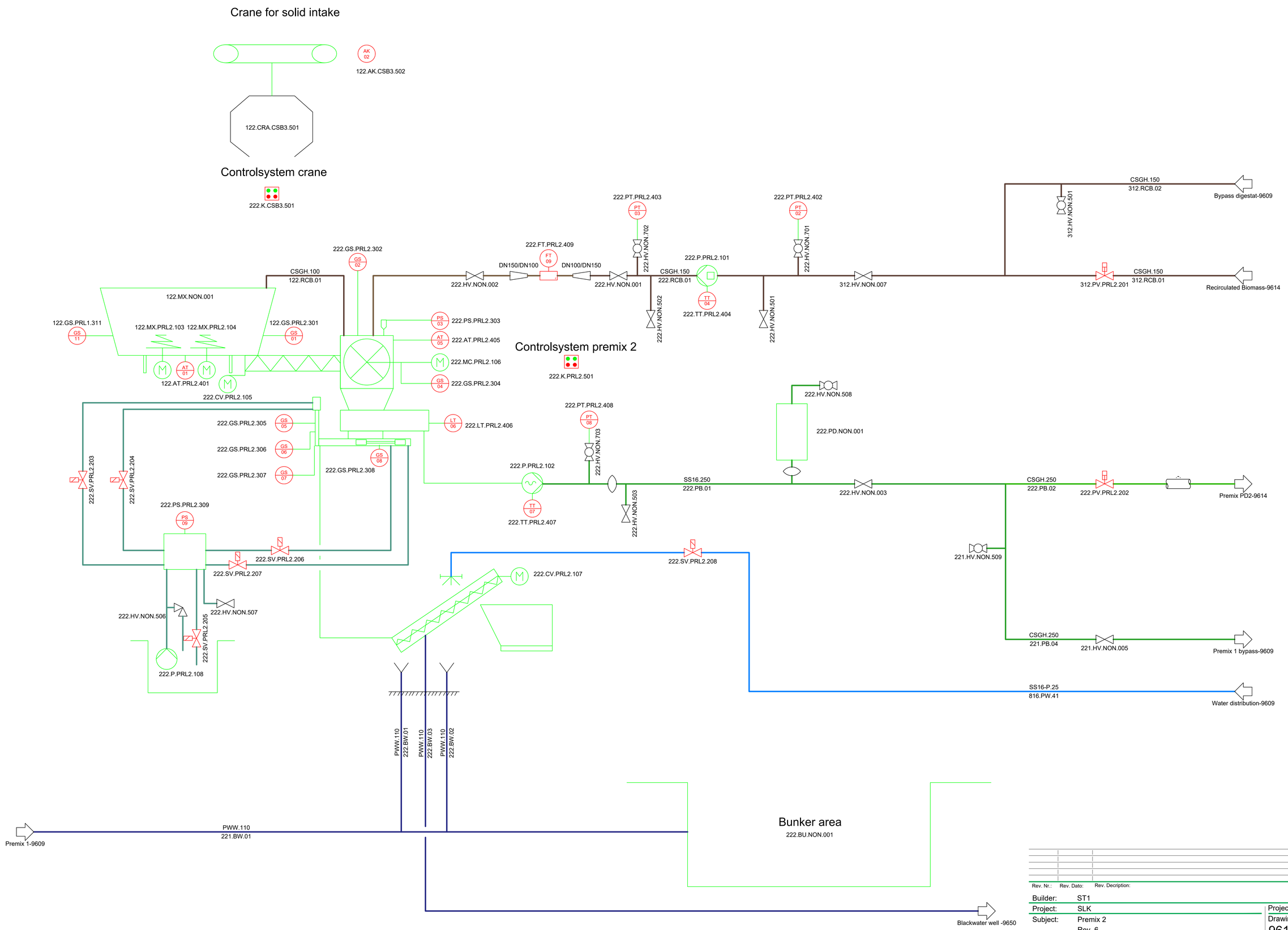


| Rev. Nr.: | Rev. Dato: | Rev. Decription: |
|---|---|---|

Builder: ST1

Project: SLK

Subject: Premix 2
Rev. 6

Int.: MDC | QC.CM | APP.: | Date: 15-10-2025

Project nr..:1768

Drawing nr..:
9610

LUNDSBY RENEWABLE SOLUTIONS
Lundsby Renewable Solutions A/S, Hjarbækvej 65, 8831 Løgstrup
Tlf.: +45 96 49 43 00 Info@lundsby.dk
This Drawing is subject to copywrite and may not be reproduced without permission from Lundsby Renewable Solutions A/S

FORMAT: A1

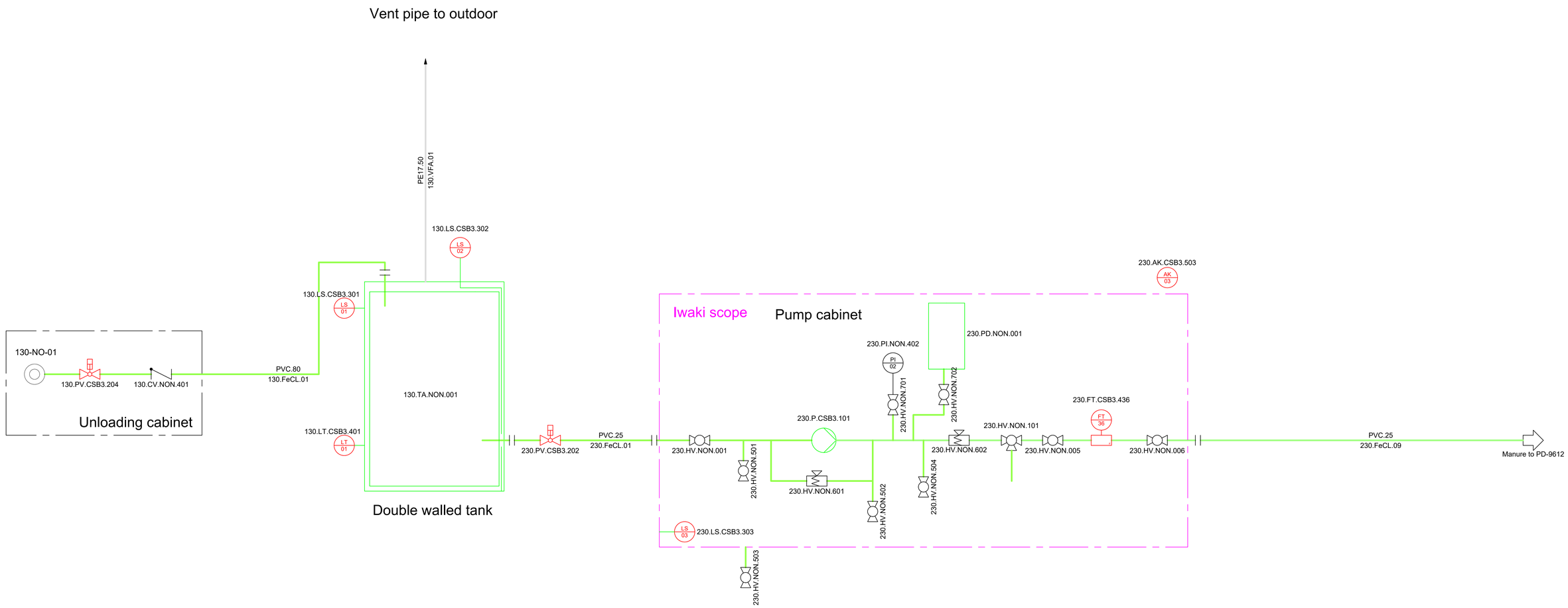


| Rev. Nr.: | Rev. Dato: | Rev. Decription: |
|---|---|---|

Builder: ST1

Project: SLK

Subject: FECL system
Rev. 6

Int.: MDC | QC.CM | APP.: | Date: 15-10-2025

Project nr..1768

Drawing nr..:
9611

FORMAT: A1

LUNDSBY RENEWABLE SOLUTIONS
Lundsby Renewable Solutions A/S, Hjarbækvej 65, 8831 Løgstrup
Tlf.: +45 96 49 43 00 Info@lundsby.dk
This Drawing is subject to copywrite and may not be reproduced without permission from Lundsby Renewable Solutions A/S

# Pumphouse 2

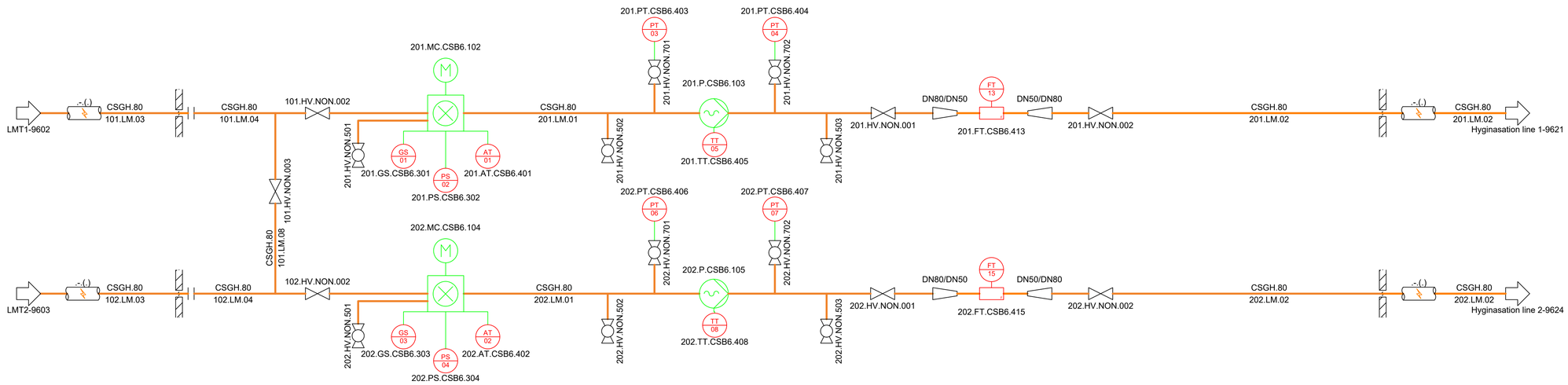


# Tech building

# SB-building

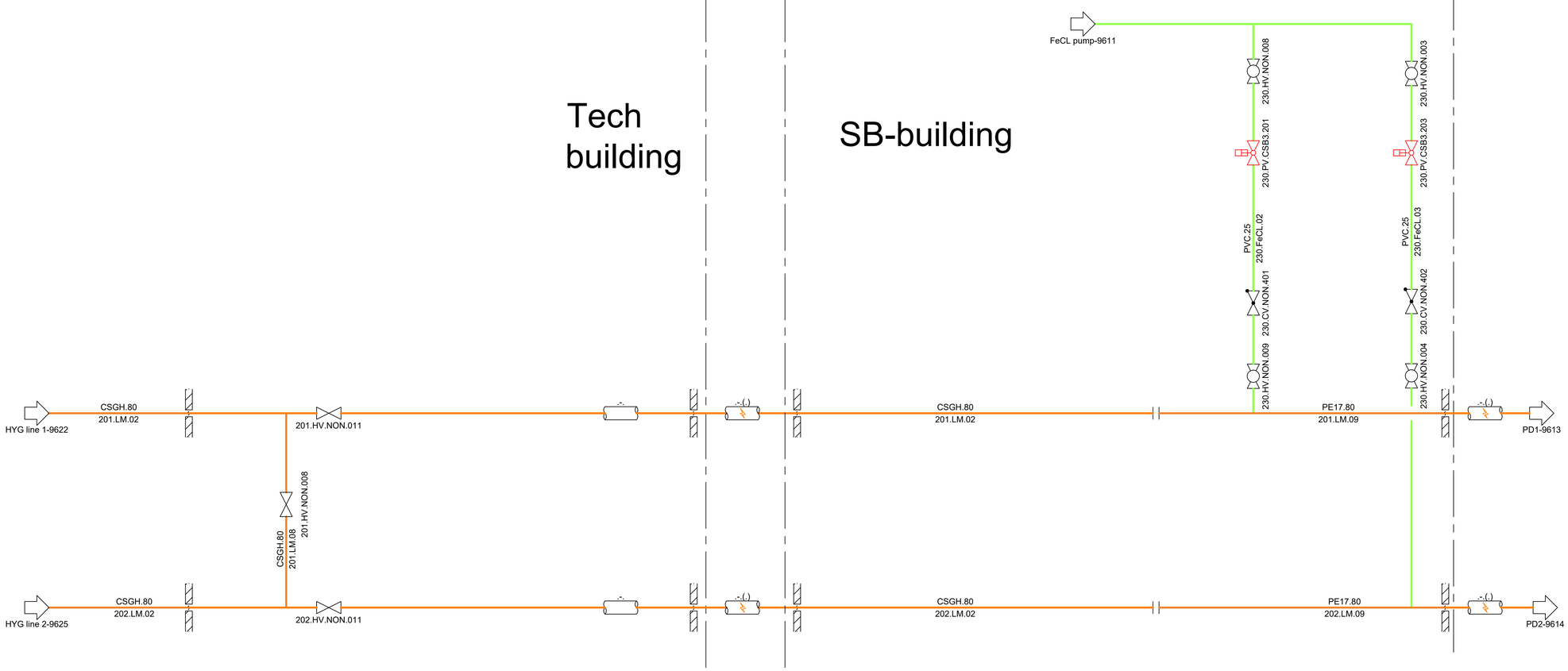


| Rev. Nr.: | Rev. Dato: | Rev. Decription: |
|---|---|---|

| | | | |
|---|---|---|---|
| Builder: | ST1 | | |
| Project: | SLK | | Project nr..:1768 |
| Subject: | Liquid manure pump<br>Rev. 6 | | Drawing nr..:<br>9612 |
| Int.: MDC | QC.CM | APP.: | Date: 15-10-2025 |


LUNDSBY RENEWABLE SOLUTIONS
Lundsby Renewable Solutions A/S, Hjarbækvej 65, 8831 Løgstrup
Tlf.: +45 96 49 43 00 Info@lundsby.dk


This Drawing is subject to copywrite and may not be reproduced without permission from Lundsby Renewable Solutions A/S


FORMAT: A1

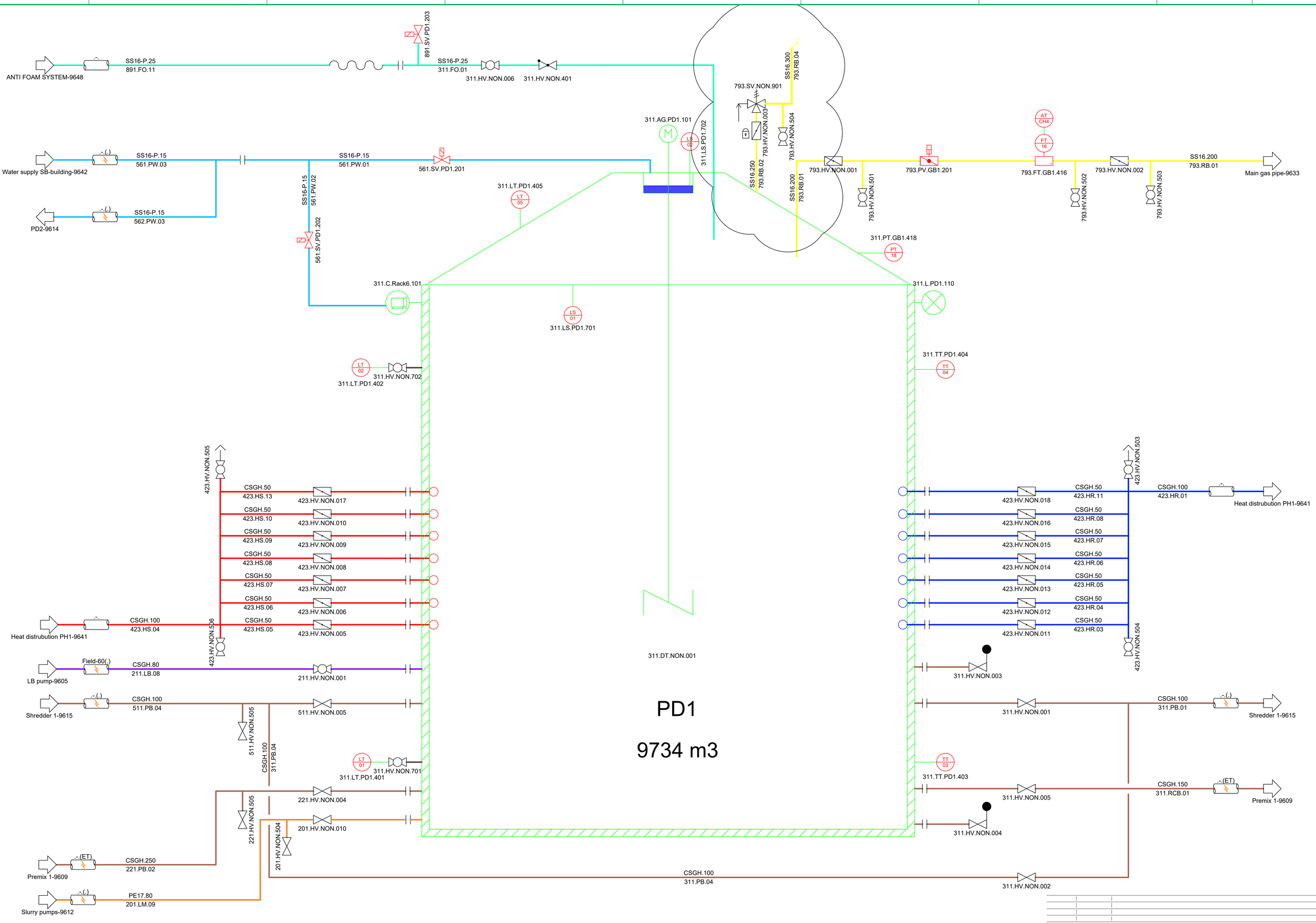


| Rev. Nr.: | Rev. Dato: | Rev. Decription: |
|---|---|---|

| | | | |
|---|---|---|---|
| Builder: | ST1 | | |
| Project: | SLK | | Project nr..1768 |
| Subject: | Primary digester 1<br>Rev. 6 | | Drawing nr..:<br>9613 |
| Int.: MDC | QC.CM | APP.: | Date: 15-10-2025 |

LUNDSBY RENEWABLE SOLUTIONS

Lundsby Renewable Solutions A/S, Hjarbækvej 65, 8831 Løgstrup
Tlf.: +45 96 49 43 00 Info@lundsby.dk

This Drawing is subject to copywrite and may not be reproduced without permission from Lundsby Renewable Solutions A/S

FORMAT: A1

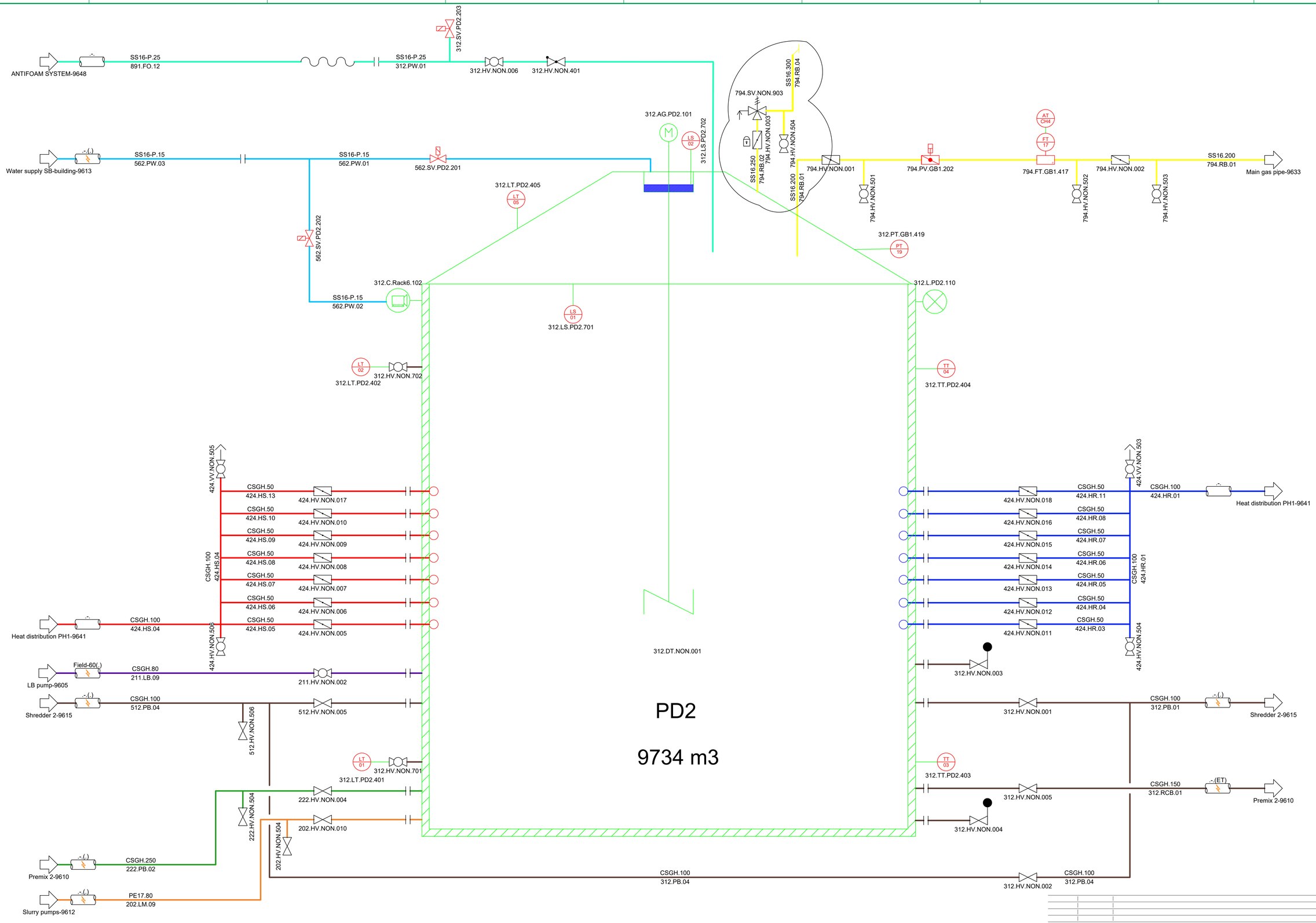


| Rev. Nr.: | Rev. Dato: | Rev. Decription: |
|---|---|---|

Builder: ST1

Project: SLK

Subject: Primary digester 2
Rev. 6

Int.: MDC | QC.CM | APP.: | Date: 15-10-2025

Project nr..1768

Drawing nr..:
9614

LUNDSBY RENEWABLE SOLUTIONS

Lundsby Renewable Solutions A/S, Hjarbækvej 65, 8831 Løgstrup
Tlf.: +45 96 49 43 00 Info@lundsby.dk

This Drawing is subject to copywrite and may not be reproduced without permission from Lundsby Renewable Solutions A/S

FORMAT: A1

# Pumphouse 1

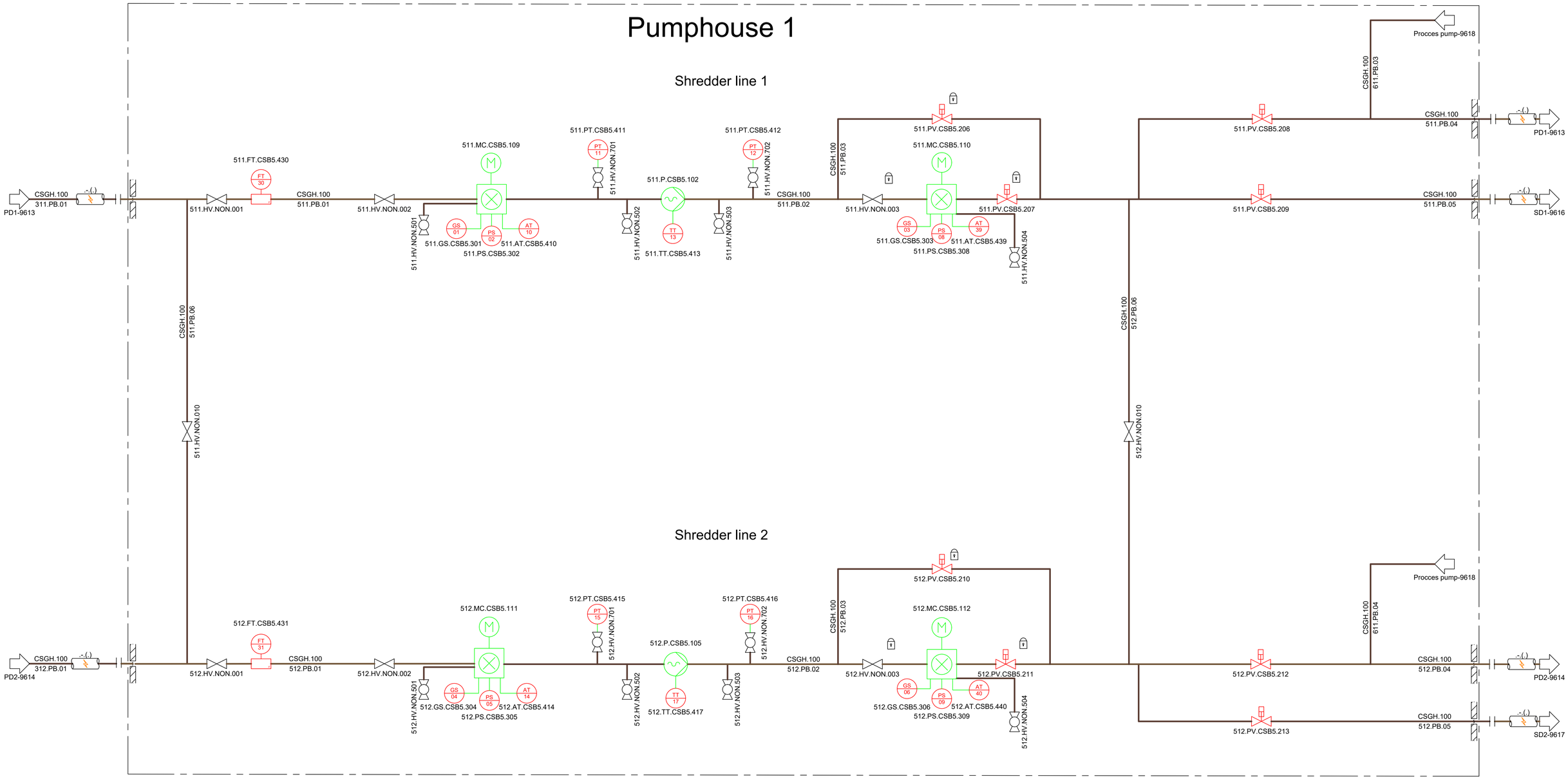


| Rev. Nr.: | Rev. Dato: | Rev. Decription: |
|---|---|---|

| | | | |
|---|---|---|---|
| Builder: | ST1 | | |
| Project: | SLK | | Project nr..1768 |
| Subject: | Shredder line 1&2<br>Rev. 6 | | Drawing nr..:<br>9615 |
| Int.:MDC | QC:CM | APP.: | Date: 15-10-2025 |

LUNDSBY RENEWABLE SOLUTIONS
Lundsby Renewable Solutions A/S, Hjarbækvej 65, 8831 Løgstrup
Tlf.: +45 96 49 43 00 Info@lundsby.dk
This Drawing is subject to copywrite and may not be reproduced without permission from Lundsby Renewable Solutions A/S

FORMAT: A1

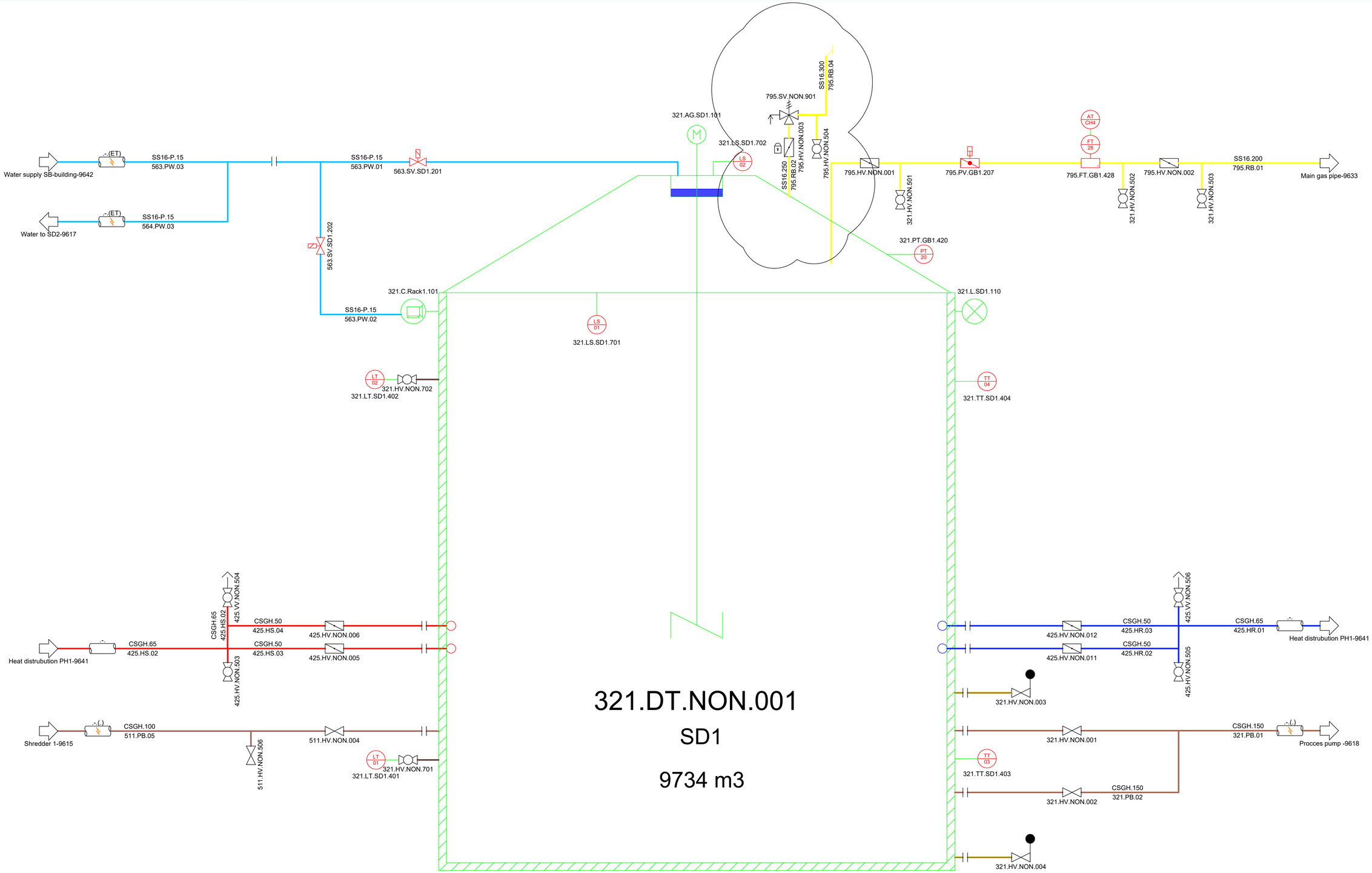


| Rev. Nr.: | Rev. Dato: | Rev. Decription: |
|---|---|---|

| | | | |
|---|---|---|---|
| Builder: | ST1 | | |
| Project: | SLK | | Project nr..1768 |
| Subject: | Secondary digester 1<br>Rev. 6 | | Drawing nr..:<br>9616 |
| Int.: MDC | QC.CM | APP.: | Date: 15-10-2025 |

LUNDSBY RENEWABLE SOLUTIONS

Lundsby Renewable Solutions A/S, Hjarbækvej 65, 8831 Løgstrup
Tlf.: +45 96 49 43 00 Info@lundsby.dk
This Drawing is subject to copywrite and may not be reproduced without permission from Lundsby Renewable Solutions A/S

FORMAT: A1

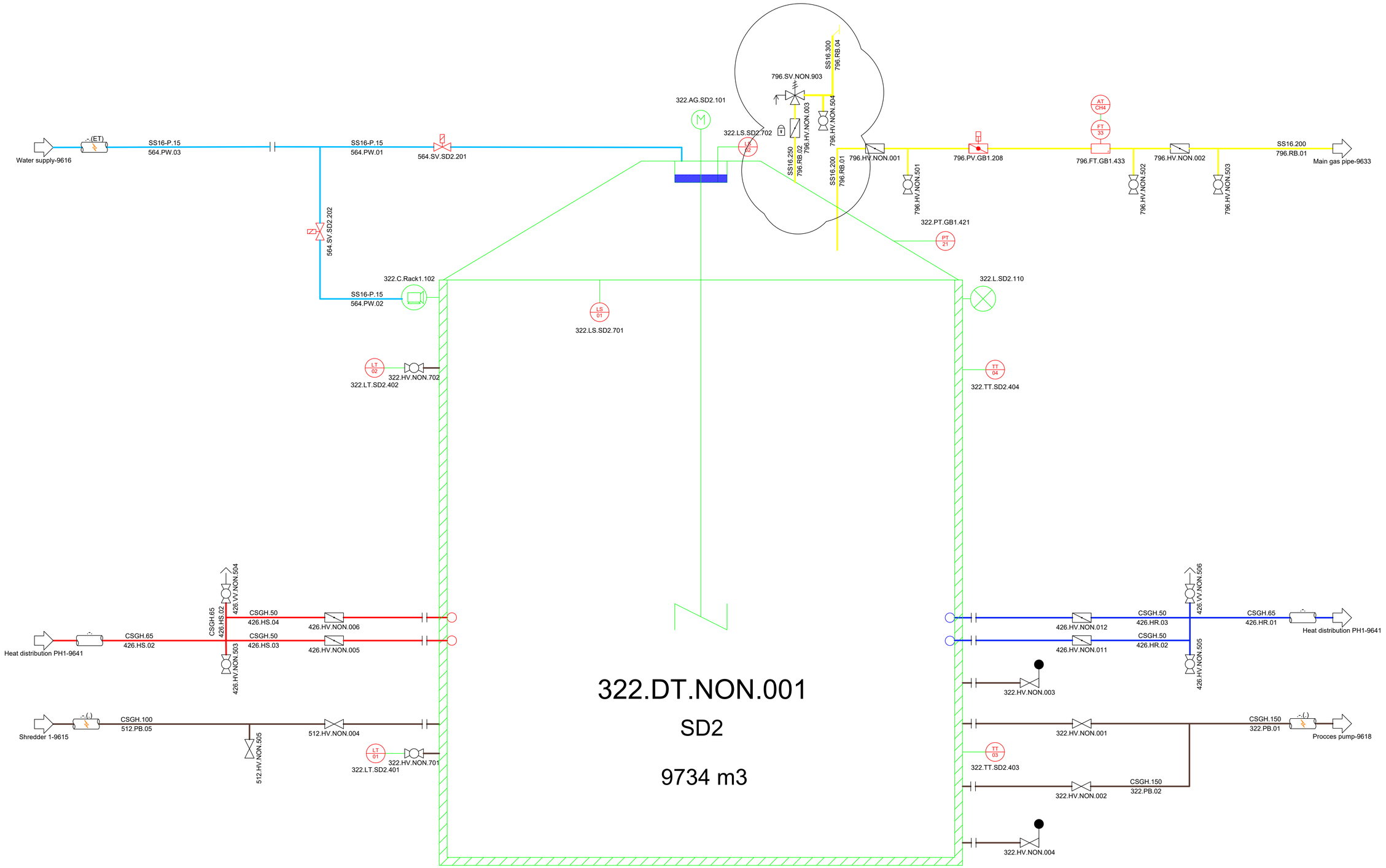


| Rev. Nr.: | Rev. Dato: | Rev. Decription: |
|---|---|---|

| | | | |
|---|---|---|---|
| Builder: | ST1 | | |
| Project: | SLK | | Project nr..1768 |
| Subject: | Secondary digester 2<br>Rev. 6 | | Drawing nr..:<br>9617 |
| Int.: MDC | QC.CM | APP.: | Date: 15-10-2025 |

LUNDSBY RENEWABLE SOLUTIONS

Lundsby Renewable Solutions A/S, Hjarbækvej 65, 8831 Løgstrup
Tlf.: +45 96 49 43 00 Info@lundsby.dk
This Drawing is subject to copywrite and may not be reproduced without permission from Lundsby Renewable Solutions A/S

FORMAT: A1

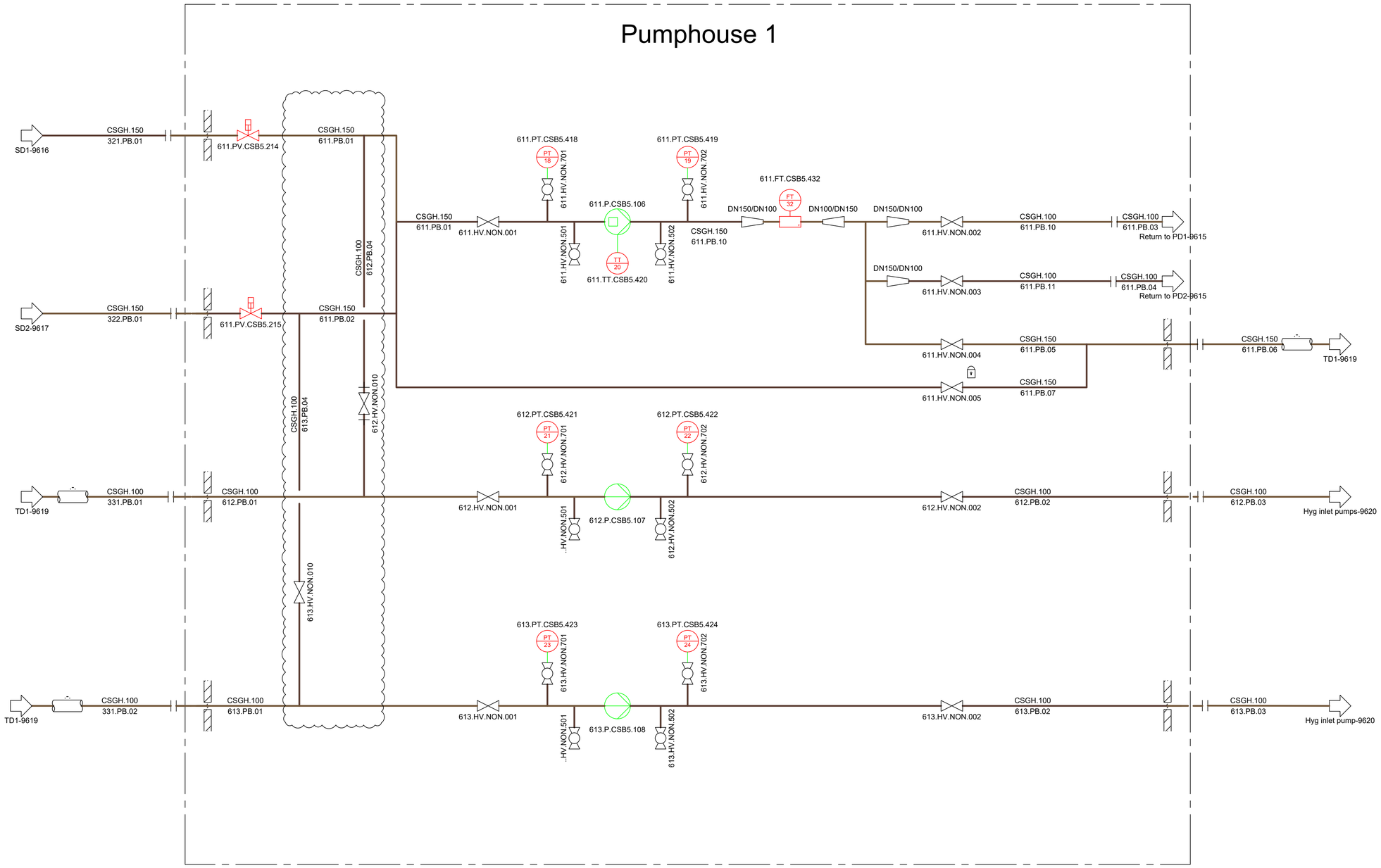


| Rev. Nr.: | Rev. Dato: | Rev. Decription: |
|---|---|---|

Builder: ST1

Project: SLK

Subject: Procces pumps
Rev. 6

Int.: MDC | QC.CM | APP.: | Date: 15-10-2025

Project nr..1768

Drawing nr..:
9618

LUNDSBY RENEWABLE SOLUTIONS

Lundsby Renewable Solutions A/S, Hjarbækvej 65, 8831 Løgstrup
Tlf.: +45 96 49 43 00 Info@lundsby.dk
This Drawing is subject to copywrite and may not be reproduced without permission from Lundsby Renewable Solutions A/S

FORMAT: A1

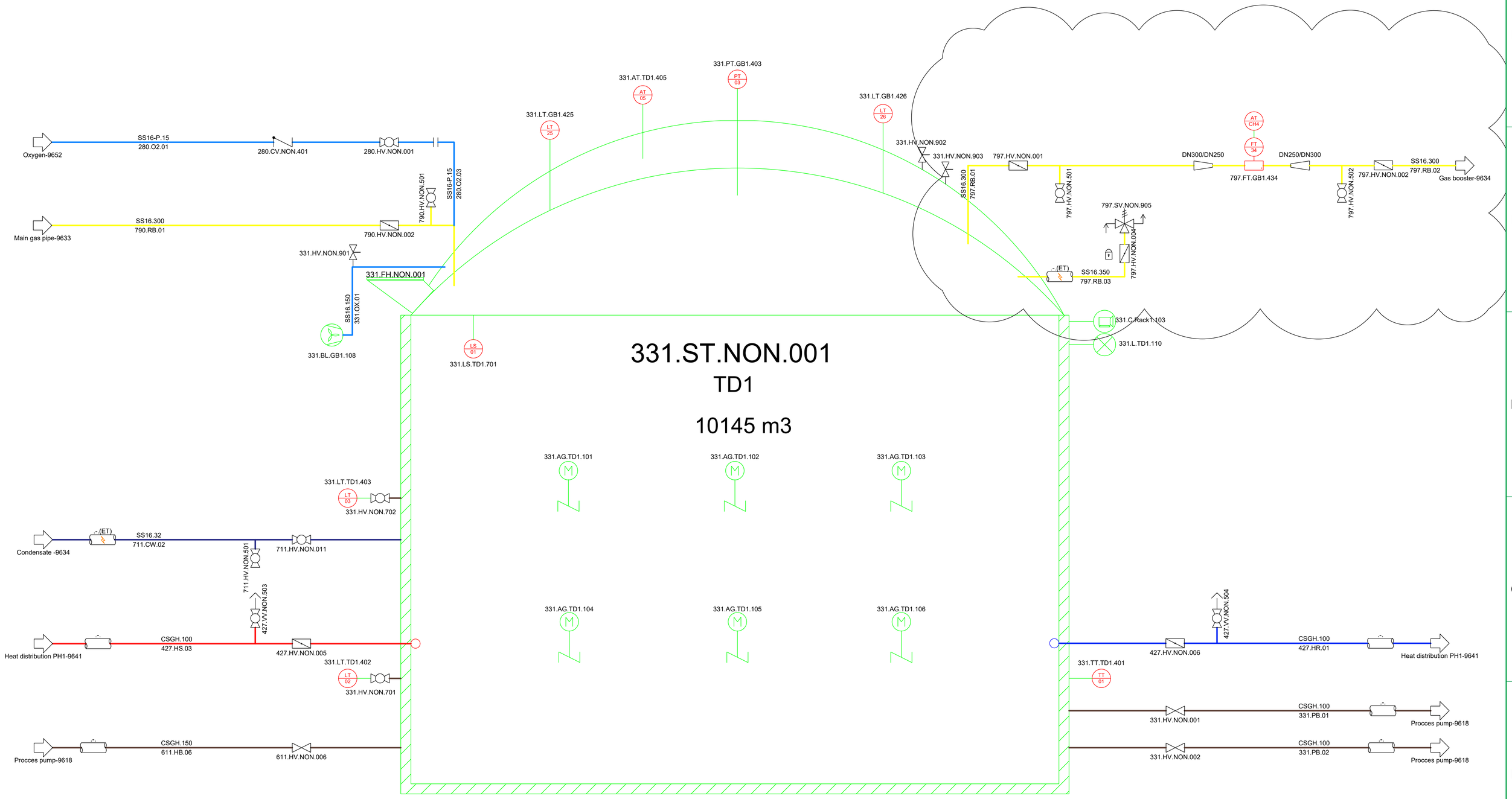


| Rev. Nr.: | Rev. Dato: | Rev. Decription: |
|---|---|---|

Builder: ST1

Project: SLK

Subject: Tertiary digester 1
Rev. 6

Int.: MDC | QC.CM | APP.: | Date: 15-10-2025

Project nr..1768

Drawing nr..:
9619

FORMAT: A1

LUNDSBY RENEWABLE SOLUTIONS

Lundsby Renewable Solutions A/S, Hjarbækvej 65, 8831 Løgstrup
Tlf.: +45 96 49 43 00 Info@lundsby.dk
This Drawing is subject to copywrite and may not be reproduced without permission from Lundsby Renewable Solutions A/S

# Tech Building

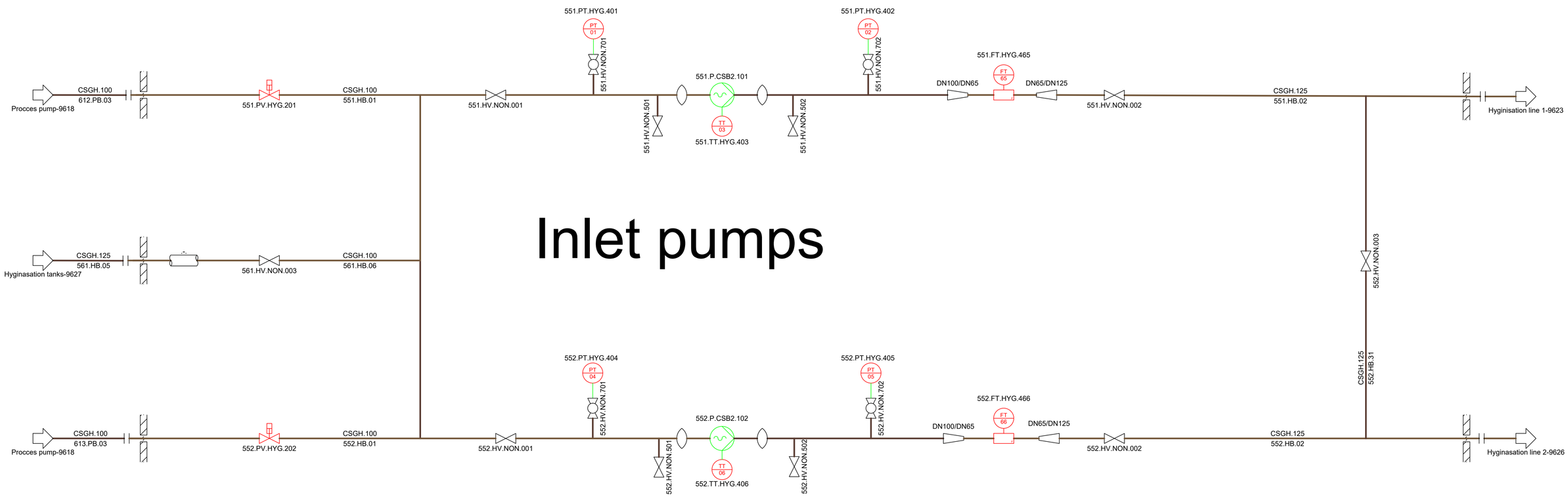


| Rev. Nr.: | Rev. Dato: | Rev. Decription: |
|---|---|---|

| | | | |
|---|---|---|---|
| Builder: | ST1 | | |
| Project: | SLK | | Project nr..1768 |
| Subject: | Hyginisation inlet pumps<br>Rev. 6 | | Drawing nr..:<br>9620 |
| Int.: MDC | QC.CM | APP.: | Date: 15-10-2025 |

LUNDSBY RENEWABLE SOLUTIONS
Lundsby Renewable Solutions A/S, Hjarbækvej 65, 8831 Løgstrup
Tlf.: +45 96 49 43 00 Info@lundsby.dk
This Drawing is subject to copywrite and may not be reproduced without permission from Lundsby Renewable Solutions A/S

FORMAT: A1

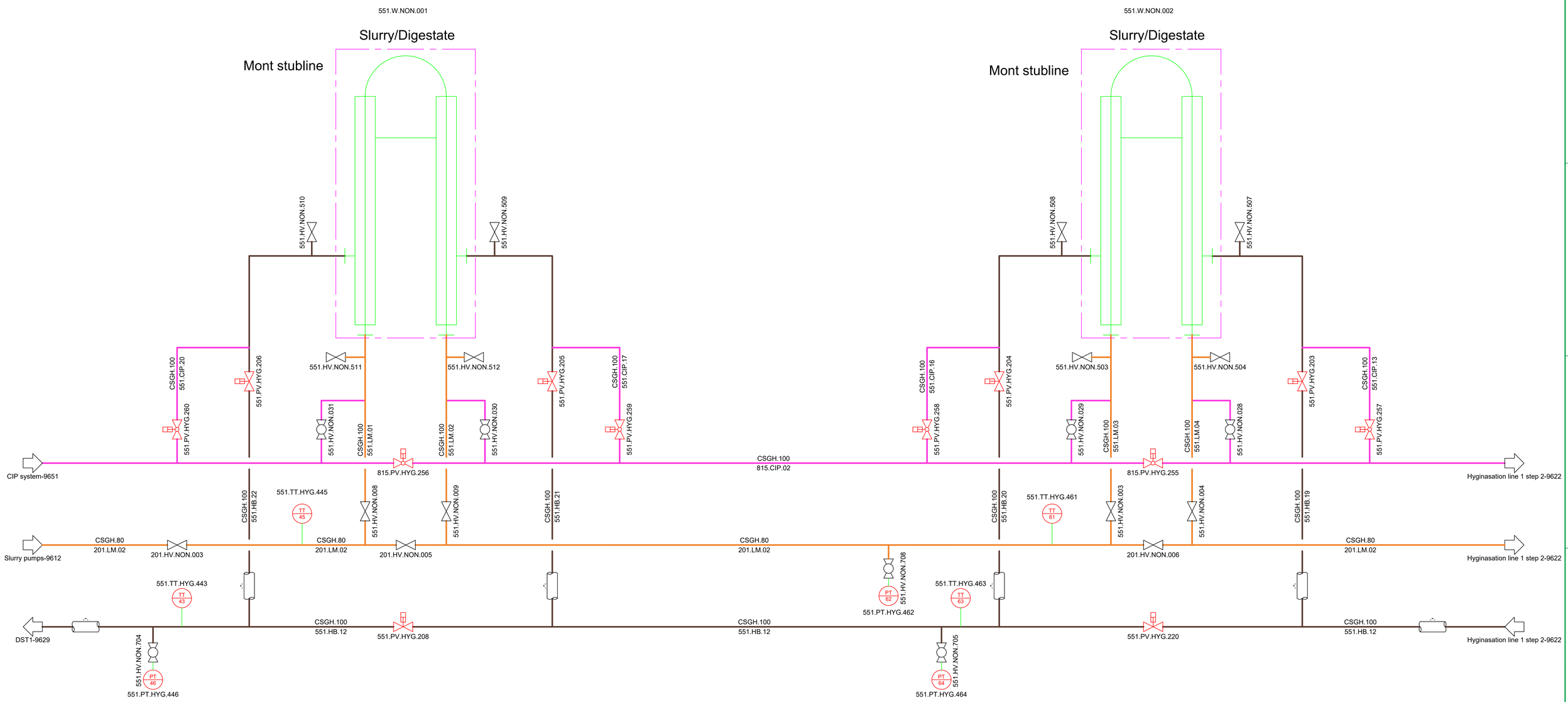


| Rev. Nr.: | Rev. Dato: | Rev. Decription: |
|---|---|---|

| | | | |
|---|---|---|---|
| Builder: | ST1 | | |
| Project: | SLK | | Project nr..:1768 |
| Subject: | Hyginasation line 1 step 1<br>Rev. 6 | | Drawing nr..:<br>9621 |
| Int.: MDC | QC.CM | APP.: | Date: 15-10-2025 |

LUNDSBY RENEWABLE SOLUTIONS
Lundsby Renewable Solutions A/S, Hjarbækvej 65, 8831 Løgstrup
Tlf.: +45 96 49 43 00 Info@lundsby.dk
This Drawing is subject to copywrite and may not be reproduced without permission from Lundsby Renewable Solutions A/S

FORMAT: A1

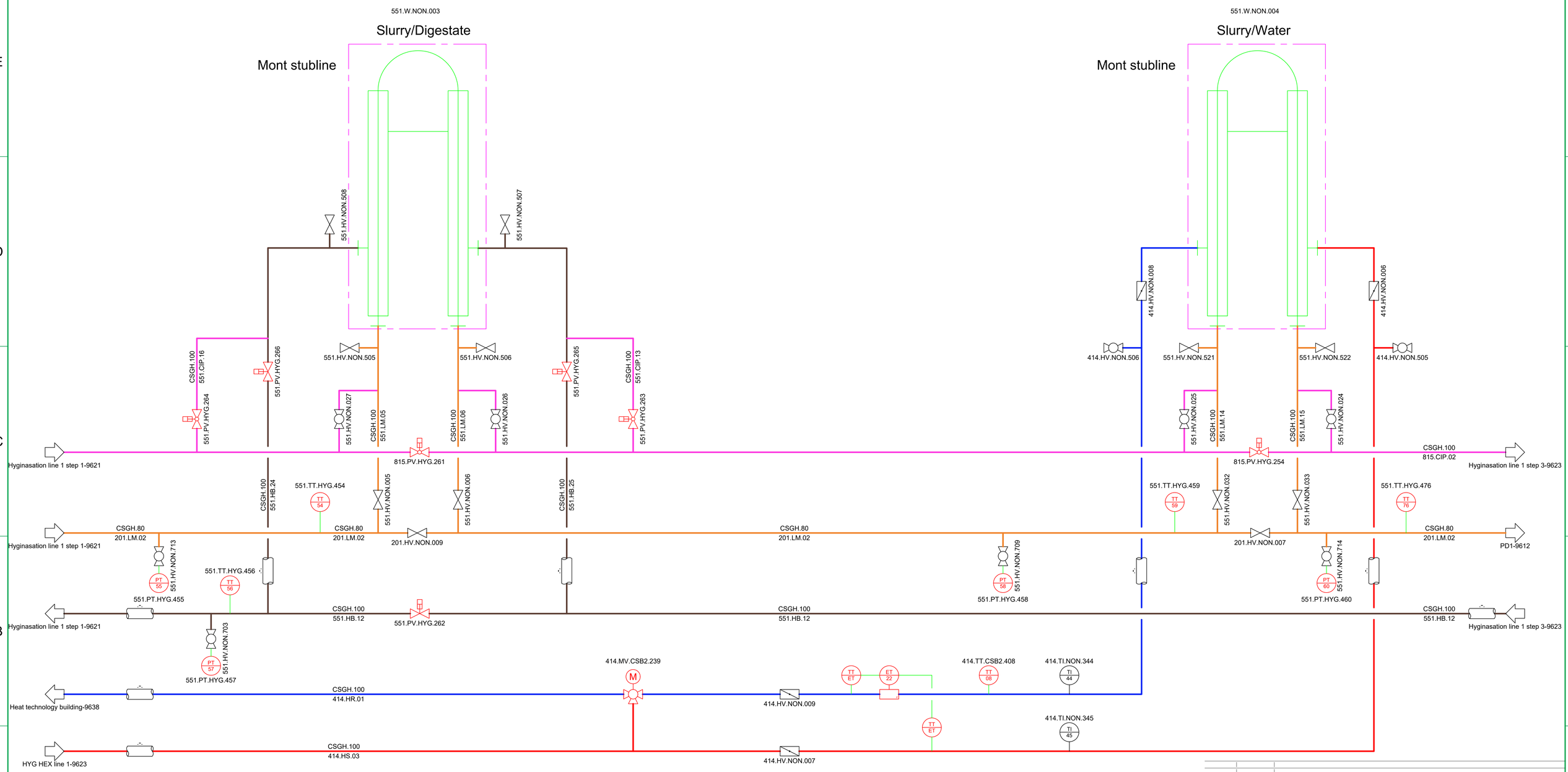


| Rev. Nr.: | Rev. Dato: | Rev. Decription: |
|---|---|---|

| | | | |
|---|---|---|---|
| Builder: | ST1 | | |
| Project: | SLK | | |
| Subject: | Hyginasation line 1 step 2<br>Rev. 6 | | |
| Int.: MDC | QC.CM | APP.: | Date: 15-10-2025 |

Project nr..:1768

Drawing nr..:
9622

FORMAT: A1

LUNDSBY RENEWABLE SOLUTIONS
Lundsby Renewable Solutions A/S, Hjarbækvej 65, 8831 Løgstrup
Tlf.: +45 96 49 43 00 Info@lundsby.dk
This Drawing is subject to copywrite and may not be reproduced without permission from Lundsby Renewable Solutions A/S

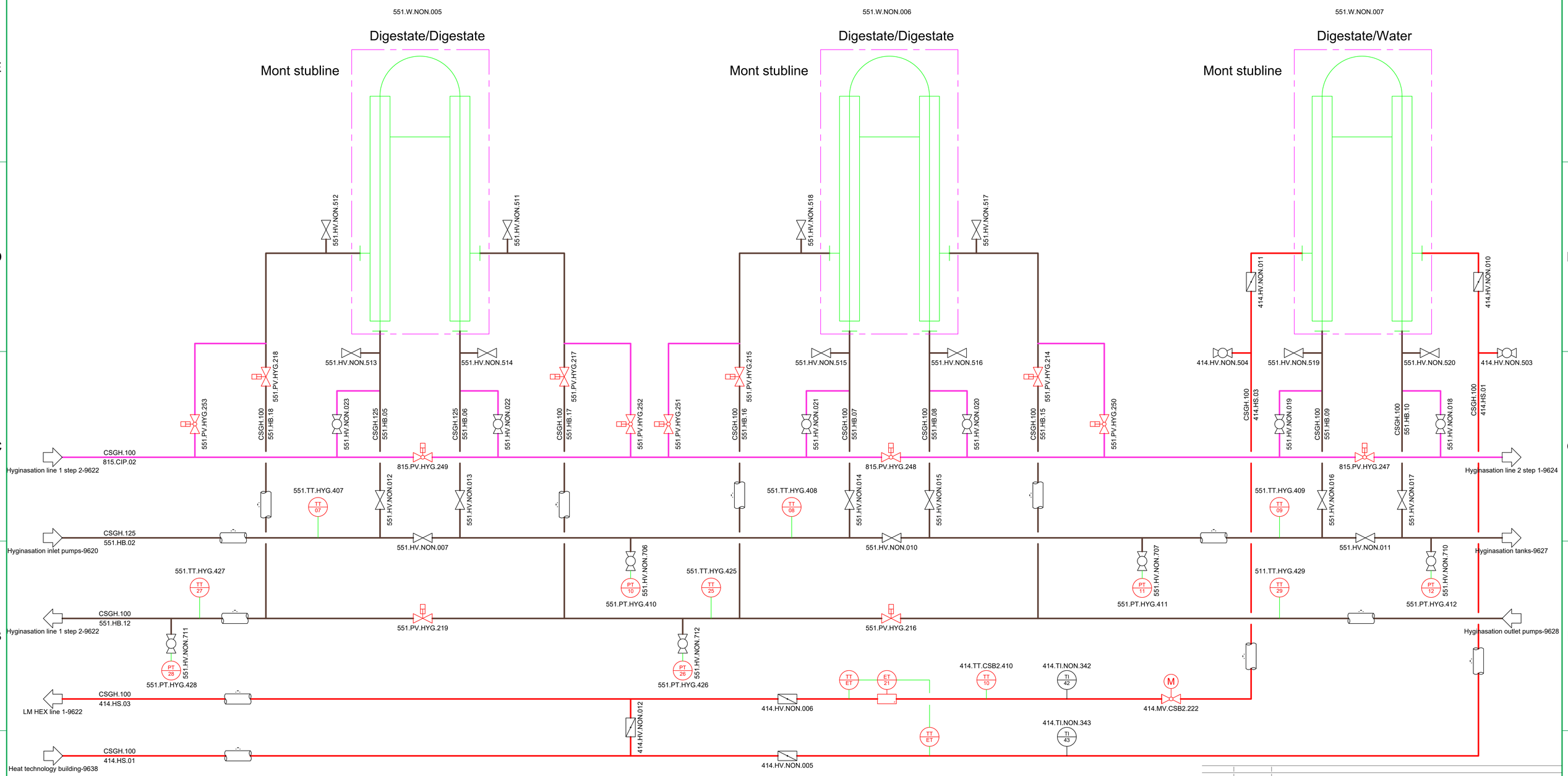


| Rev. Nr.: | Rev. Dato: | Rev. Decription: |
|---|---|---|

| | | | |
|---|---|---|---|
| Builder: | ST1 | | |
| Project: | SLK | | |
| Subject: | Hyginasation line 1 step 3<br>Rev. 6 | | |
| Int.: MDC | QC.CM | APP.: | Date: 15-10-2025 |

Project nr..:1768

Drawing nr..:
9623

FORMAT: A1

LUNDSBY RENEWABLE SOLUTIONS
Lundsby Renewable Solutions A/S, Hjarbækvej 65, 8831 Løgstrup
Tlf.: +45 96 49 43 00 Info@lundsby.dk
This Drawing is subject to copywrite and may not be reproduced without permission from Lundsby Renewable Solutions A/S

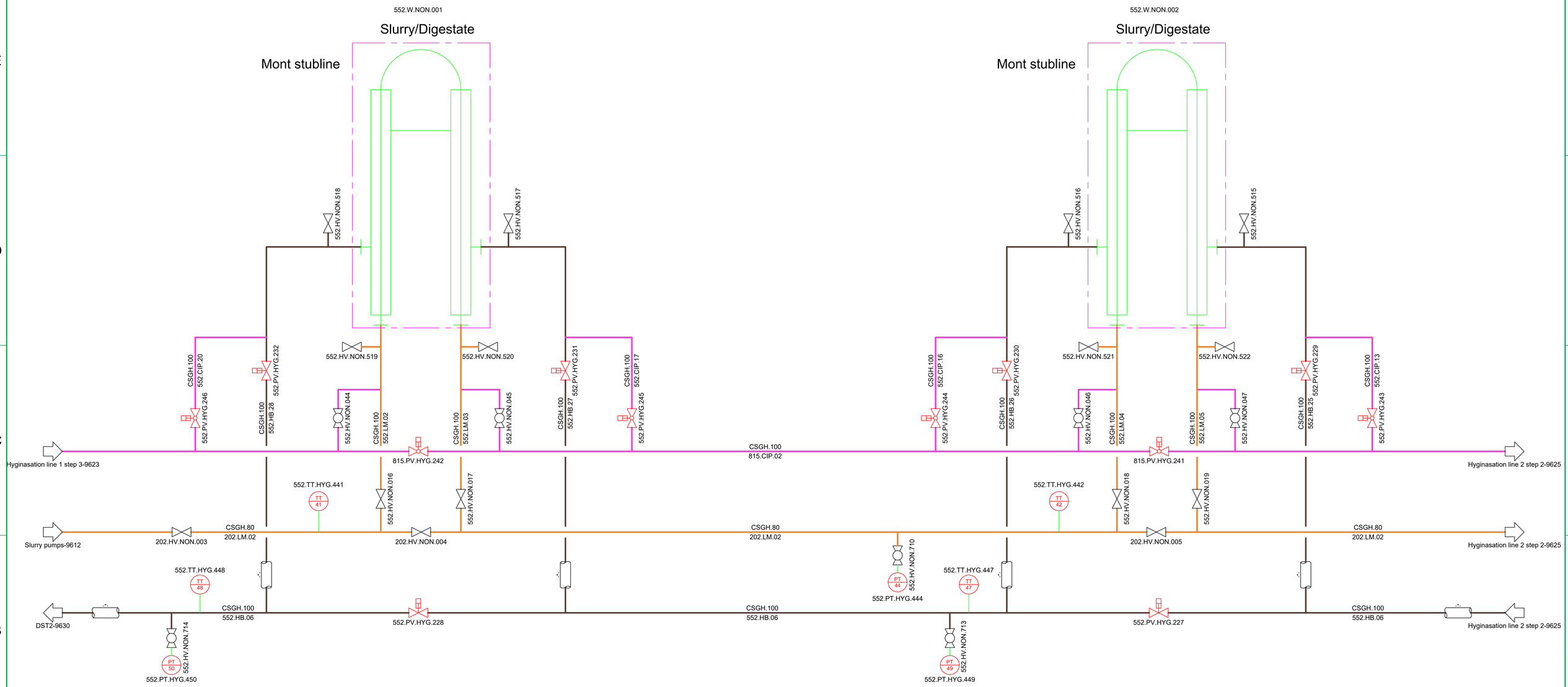


| Rev. Nr.: | Rev. Dato: | Rev. Decription: |
|---|---|---|

Builder: ST1

Project: SLK

Subject: Hyginasation line 2 step 1
Rev. 6

Int.: MDC | QC.CM | APP.: | Date: 15-10-2025

Project nr..: 1768

Drawing nr..:
9624

LUNDSBY RENEWABLE SOLUTIONS
Lundsby Renewable Solutions A/S, Hjarbækvej 65, 8831 Løgstrup
Tlf.: +45 96 49 43 00 Info@lundsby.dk
This Drawing is subject to copywrite and may not be reproduced without permission from Lundsby Renewable Solutions A/S

FORMAT: A1

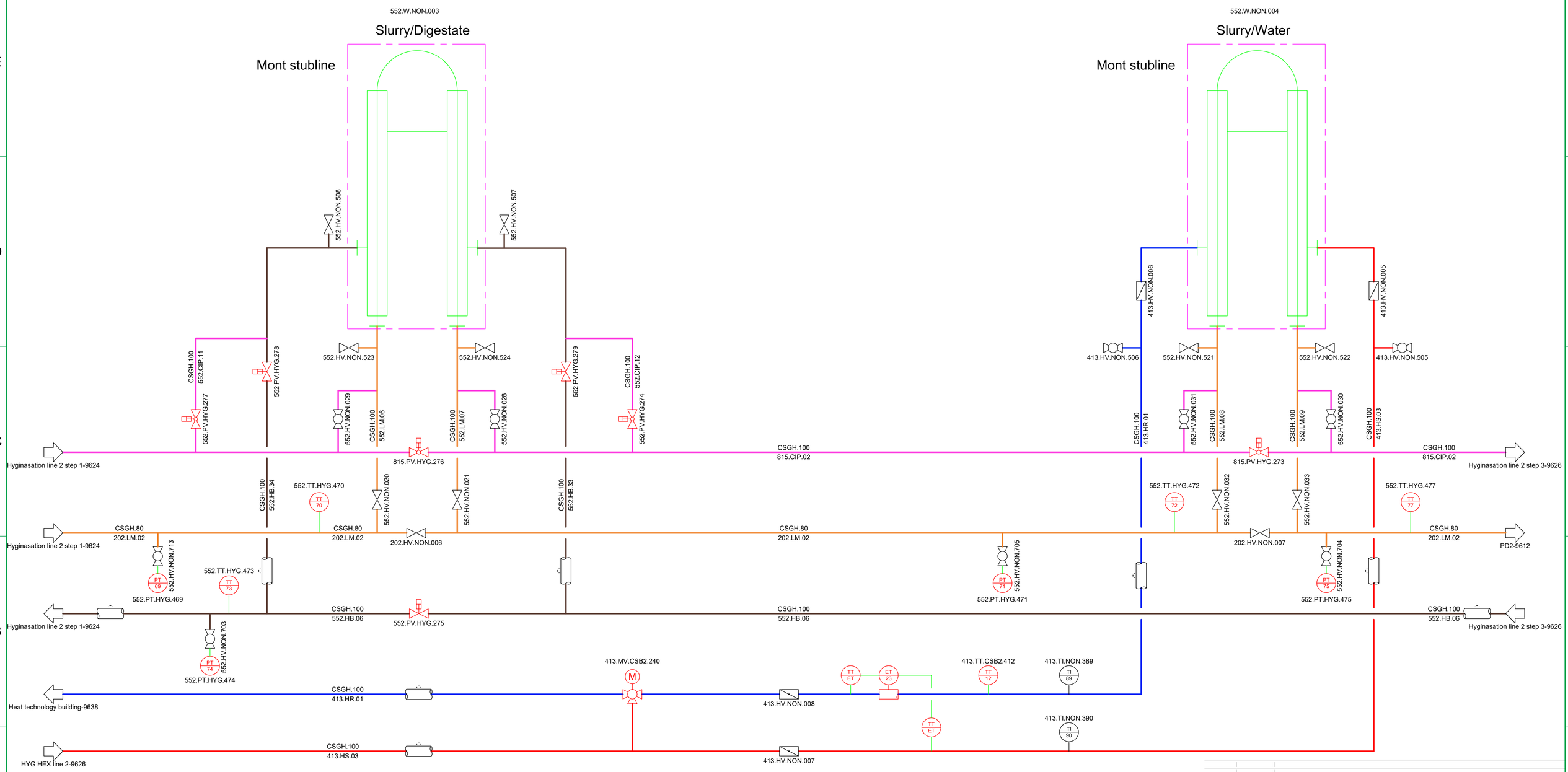


| Rev. Nr.: | Rev. Dato: | Rev. Decription: |
|---|---|---|

| | | | |
|---|---|---|---|
| Builder: | ST1 | | |
| Project: | SLK | | Project nr..:1768 |
| Subject: | Hyginasation line 2 step 2<br>Rev. 6 | | Drawing nr..:<br>9625 |
| Int.: MDC | QC.CM | APP.: | Date: 15-10-2025 |

LUNDSBY RENEWABLE SOLUTIONS

Lundsby Renewable Solutions A/S, Hjarbækvej 65, 8831 Løgstrup
Tlf.: +45 96 49 43 00 Info@lundsby.dk
This Drawing is subject to copywrite and may not be reproduced without permission from Lundsby Renewable Solutions A/S

FORMAT: A1

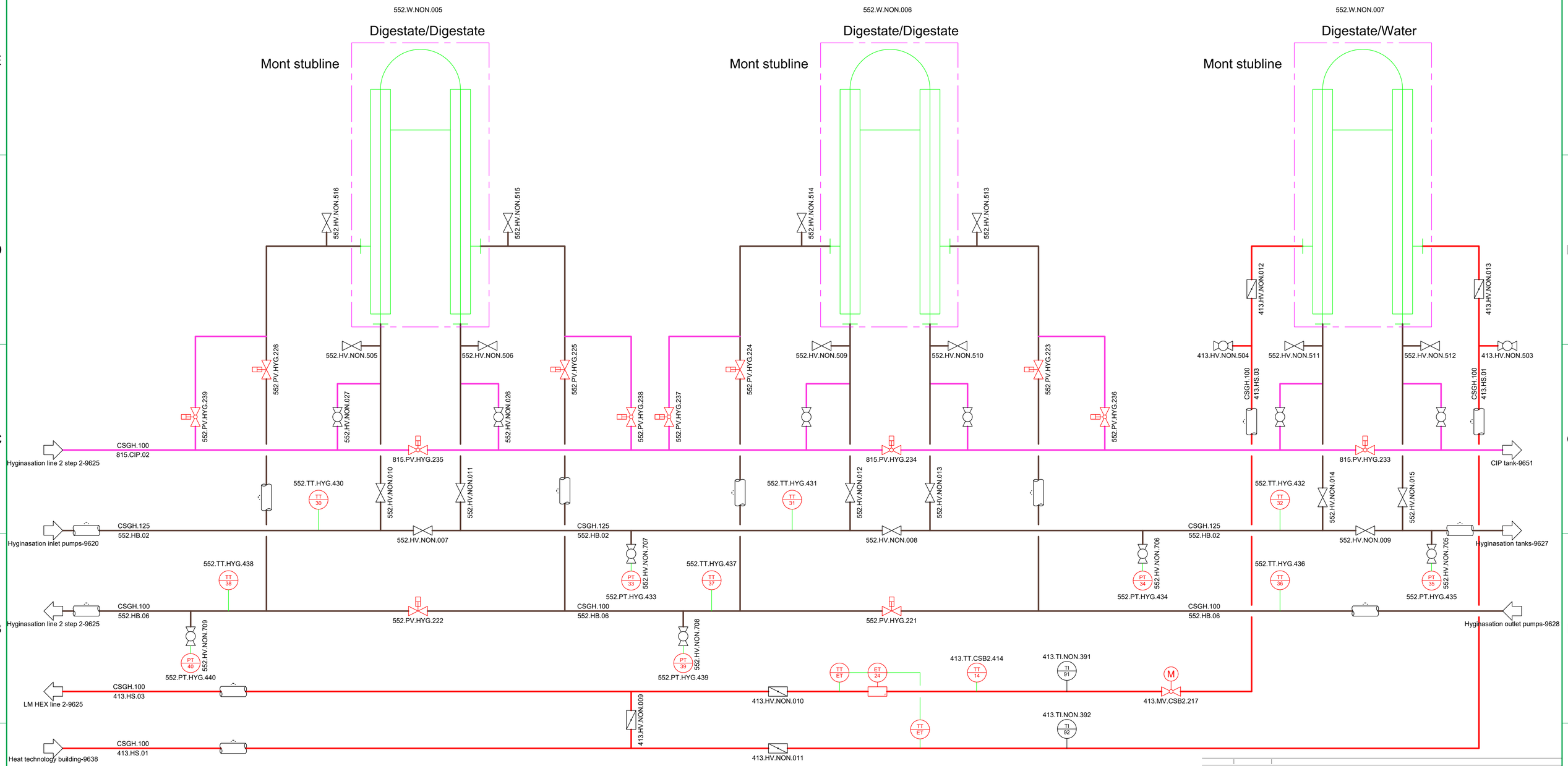


| Rev. Nr.: | Rev. Dato: | Rev. Decription: |
|---|---|---|

| | | | |
|---|---|---|---|
| Builder: | ST1 | | |
| Project: | SLK | | |
| Subject: | Hyginasation line 2 step 3<br>Rev. 6 | | |
| Int.: MDC | QC.CM | APP.: | Date: 15-10-2025 |

Project nr..:1768

Drawing nr..:
9626

FORMAT: A1

LUNDSBY RENEWABLE SOLUTIONS
Lundsby Renewable Solutions A/S, Hjarbækvej 65, 8831 Løgstrup
Tlf.: +45 96 49 43 00 Info@lundsby.dk
This Drawing is subject to copywrite and may not be reproduced without permission from Lundsby Renewable Solutions A/S

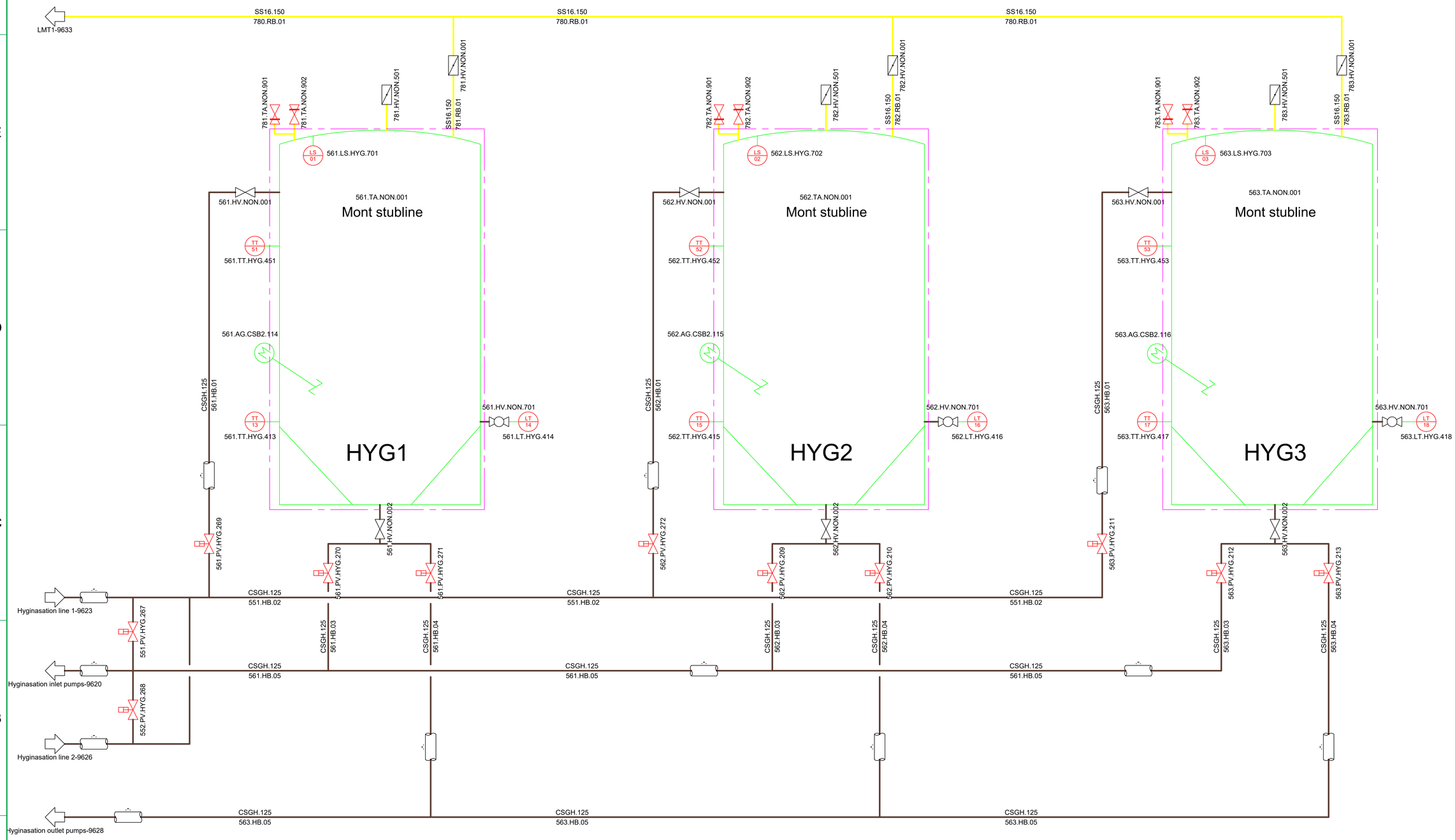


| Rev. Nr.: | Rev. Dato: | Rev. Decription: |
|---|---|---|

| | | | |
|---|---|---|---|
| Builder: | ST1 | | |
| Project: | SLK | | Project nr..1768 |
| Subject: | Hyginasation tanks<br>Rev. 6 | | Drawing nr..:<br>9627 |
| Int.: MDC | QC.CM | APP.: | Date: 15-10-2025 |

LUNDSBY RENEWABLE SOLUTIONS

Lundsby Renewable Solutions A/S, Hjarbækvej 65, 8831 Løgstrup
Tlf.: +45 96 49 43 00 Info@lundsby.dk
This Drawing is subject to copywrite and may not be reproduced without permission from Lundsby Renewable Solutions A/S

FORMAT: A1

# Tech Building

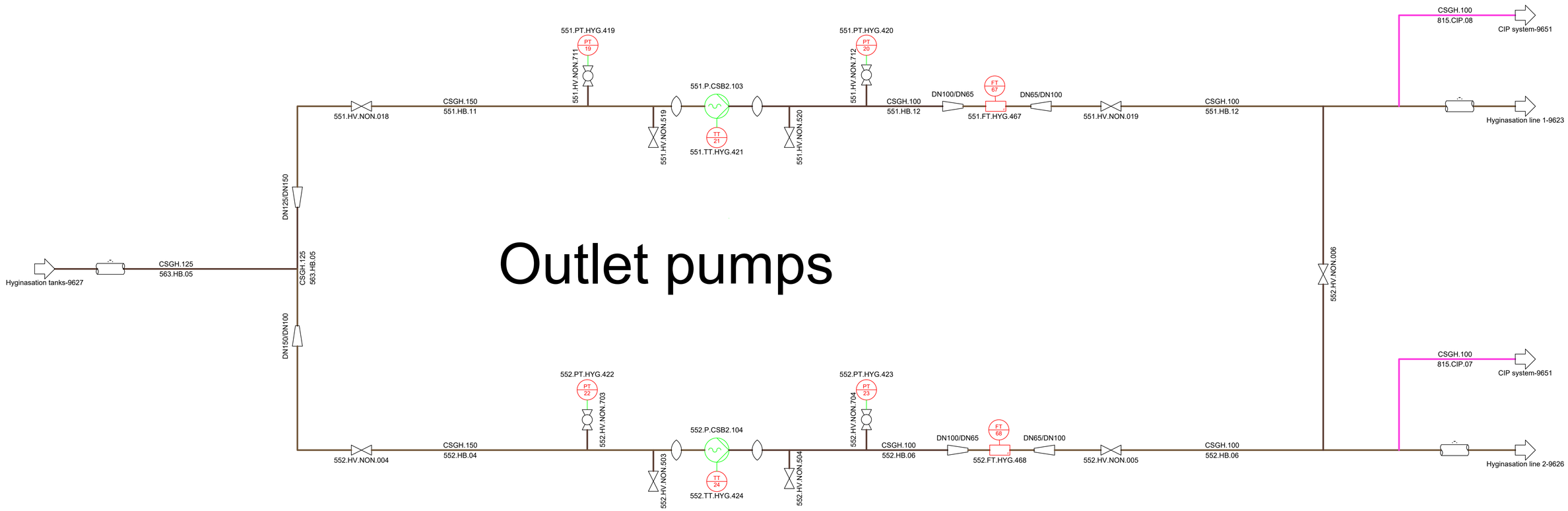


| Rev. Nr.: | Rev. Dato: | Rev. Decription: |
|---|---|---|

| | | | |
|---|---|---|---|
| Builder: | ST1 | | |
| Project: | SLK | | Project nr..:1768 |
| Subject: | Hyginasation outlet pumps<br>Rev. 6 | | Drawing nr..:<br>9628 |
| Int.: MDC | QC.CM | APP.: | Date: 15-10-2025 |

LUNDSBY RENEWABLE SOLUTIONS
Lundsby Renewable Solutions A/S, Hjarbækvej 65, 8831 Løgstrup
Tlf.: +45 96 49 43 00 Info@lundsby.dk
This Drawing is subject to copywrite and may not be reproduced without permission from Lundsby Renewable Solutions A/S

FORMAT: A1

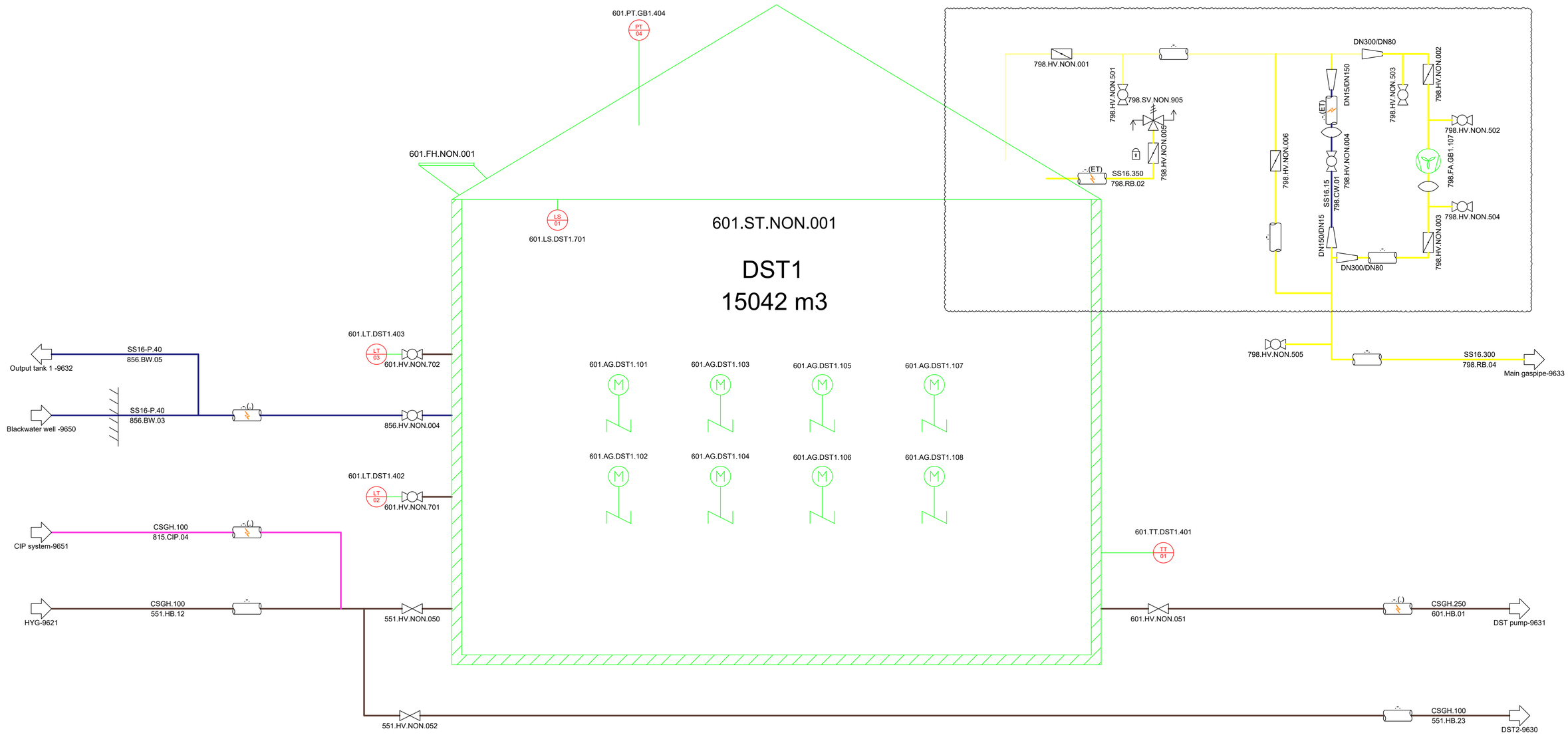


| Rev. Nr.: | Rev. Dato: | Rev. Decription: |
|---|---|---|

Builder: ST1

Project: SLK

Subject: Digestate Storage Tank 1
Rev. 6

Int.: MDC | QC.CM | APP.: | Date: 15-10-2025

Project nr..: 1768

Drawing nr..:
9629

FORMAT: A1

LUNDSBY RENEWABLE SOLUTIONS
Lundsby Renewable Solutions A/S, Hjarbækvej 65, 8831 Løgstrup
Tlf.: +45 96 49 43 00 Info@lundsby.dk
This Drawing is subject to copywrite and may not be reproduced without permission from Lundsby Renewable Solutions A/S

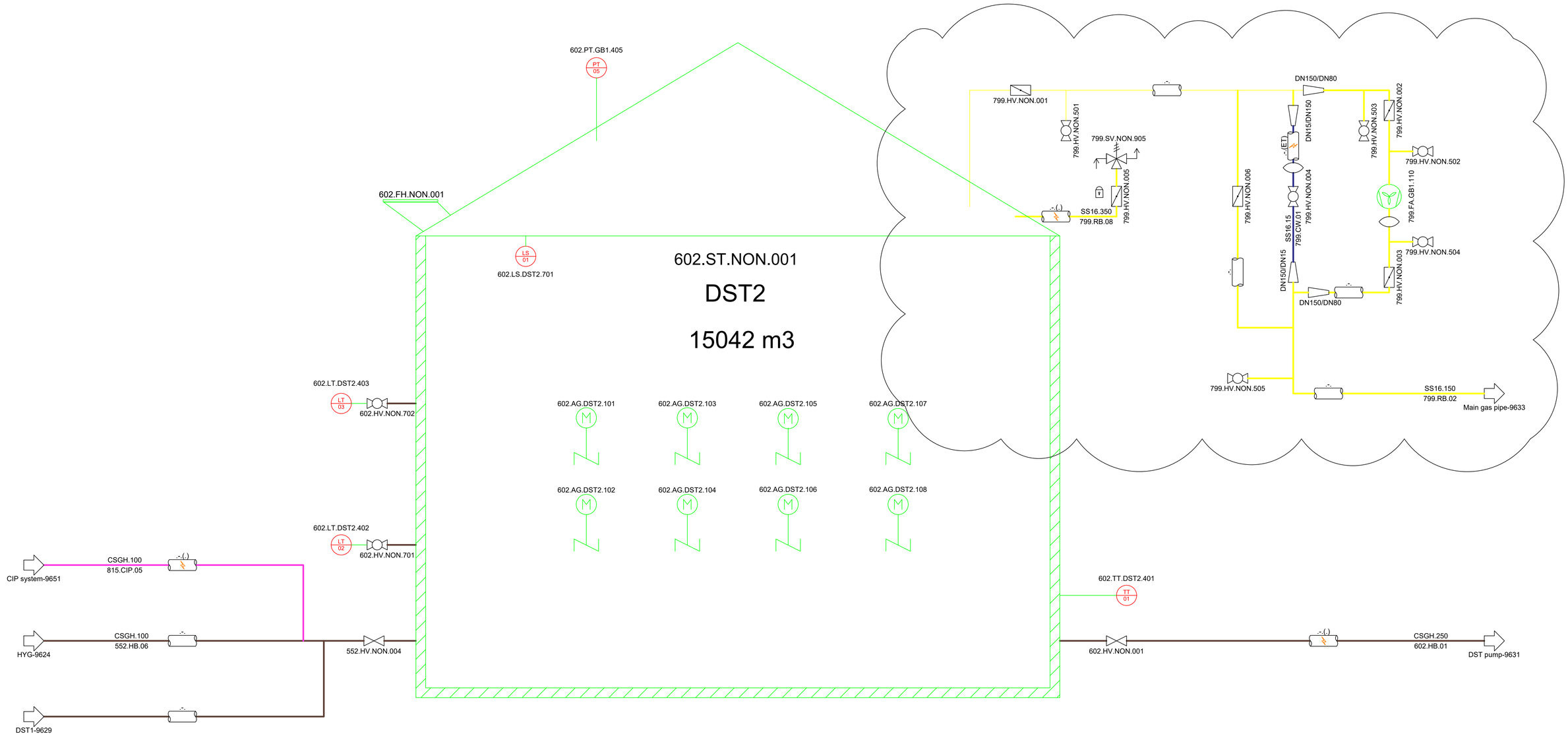


| Rev. Nr.: | Rev. Dato: | Rev. Decription: |
|---|---|---|

Builder: ST1

Project: SLK

Subject: Digestate Storage Tank 2
Rev. 6

Int.: MDC | QC.CM | APP.: | Date: 15-10-2025

Project nr..: 1768

Drawing nr..:
9630

FORMAT: A1

LUNDSBY RENEWABLE SOLUTIONS
Lundsby Renewable Solutions A/S, Hjarbækvej 65, 8831 Løgstrup
Tlf.: +45 96 49 43 00 Info@lundsby.dk
This Drawing is subject to copywrite and may not be reproduced without permission from Lundsby Renewable Solutions A/S

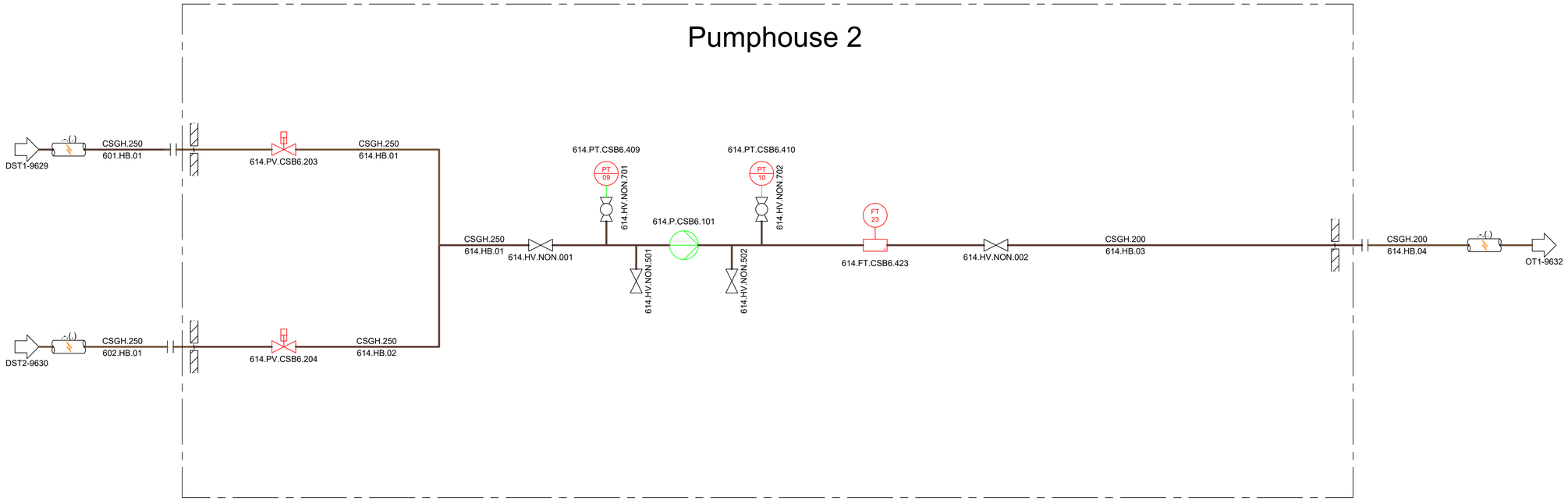


| Rev. Nr.: | Rev. Dato: | Rev. Decription: |
|---|---|---|

Builder: ST1

Project: SLK

Subject: DST pump
Rev. 6

Int.: MDC | QC.CM | APP.: | Date: 15-10-2025

Project nr..1768

Drawing nr..:
9631

LUNDSBY RENEWABLE SOLUTIONS

Lundsby Renewable Solutions A/S, Hjarbækvej 65, 8831 Løgstrup
Tlf.: +45 96 49 43 00 Info@lundsby.dk
This Drawing is subject to copywrite and may not be reproduced without permission from Lundsby Renewable Solutions A/S

FORMAT: A1

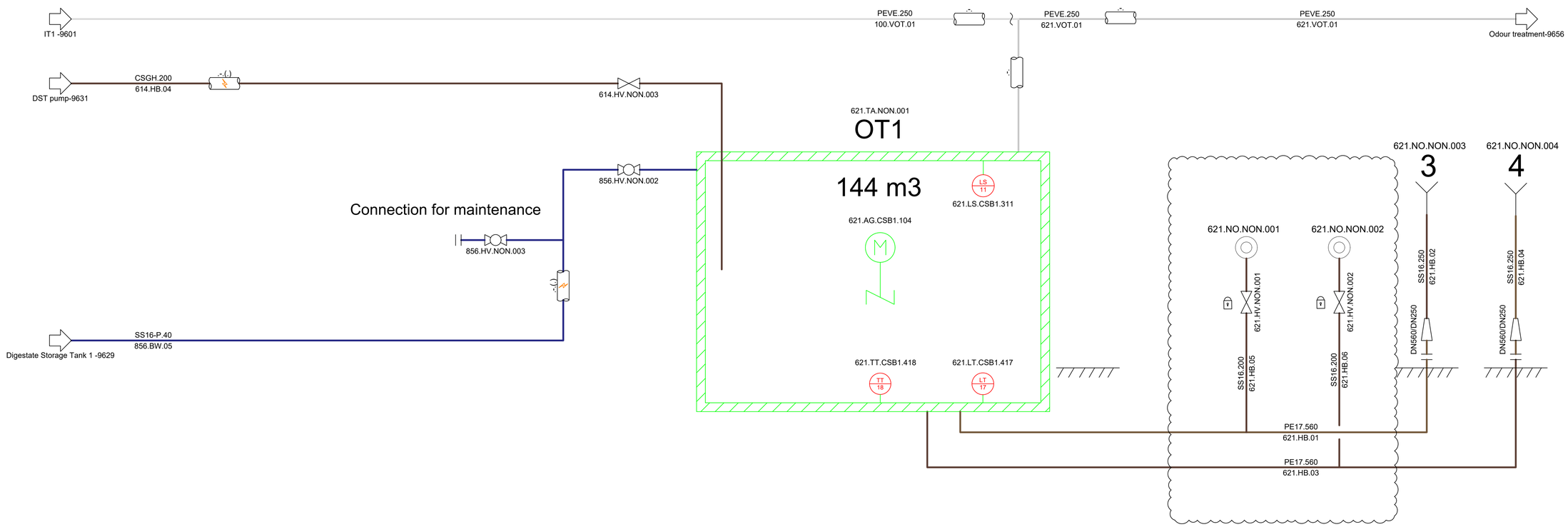


| Rev. Nr.: | Rev. Dato: | Rev. Decription: |
|---|---|---|

| | | | |
|---|---|---|---|
| Builder: | ST1 | | |
| Project: | SLK | | Project nr..1768 |
| Subject: | Output tank 1<br>Rev. 6 | | Drawing nr..:<br>9632 |
| Int.:MDC | QC.ĆM | APP.: | Date: 15-10-2025 |

LUNDSBY RENEWABLE SOLUTIONS

Lundsby Renewable Solutions A/S, Hjarbækvej 65, 8831 Løgstrup
Tlf.: +45 96 49 43 00 Info@lundsby.dk
This Drawing is subject to copywrite and may not be reproduced without permission from Lundsby Renewable Solutions A/S

FORMAT: A1

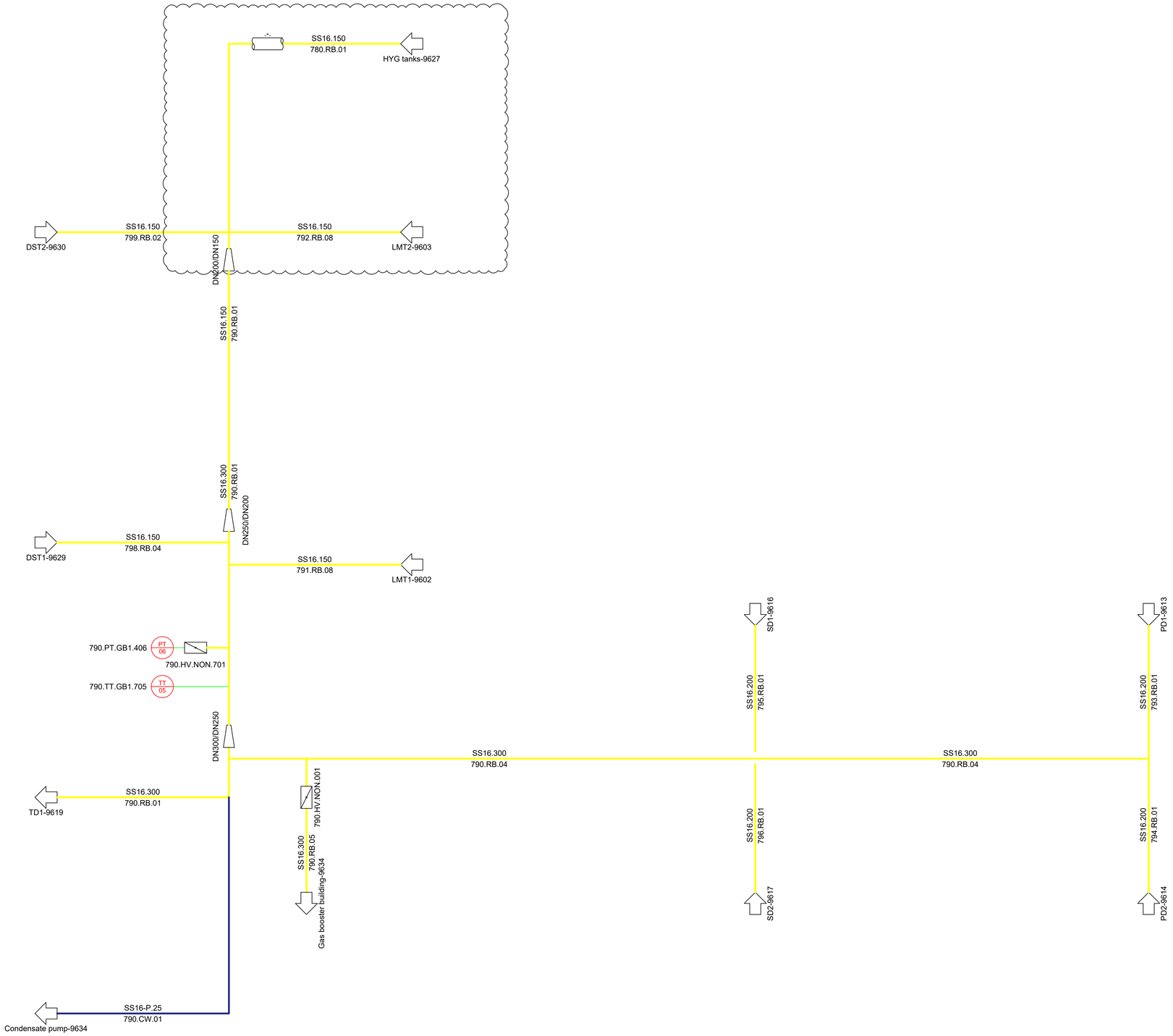


| Rev. Nr.: | Rev. Dato: | Rev. Decription: |
|---|---|---|

| | | | |
|---|---|---|---|
| Builder: | ST1 | | |
| Project: | SLK | | Project nr..: 1768 |
| Subject: | Main gas pipe<br>Rev. 6 | | Drawing nr..:<br>9633 |
| Int.: MDC | QC.: CM | APP.: | Date: 15-10-2025 |

LUNDSBY RENEWABLE SOLUTIONS
Lundsby Renewable Solutions A/S, Hjarbækvej 65, 8831 Løgstrup
Tlf.: +45 96 49 43 00 Info@lundsby.dk
This Drawing is subject to copywrite and may not be reproduced without permission from Lundsby Renewable Solutions A/S

FORMAT: A1

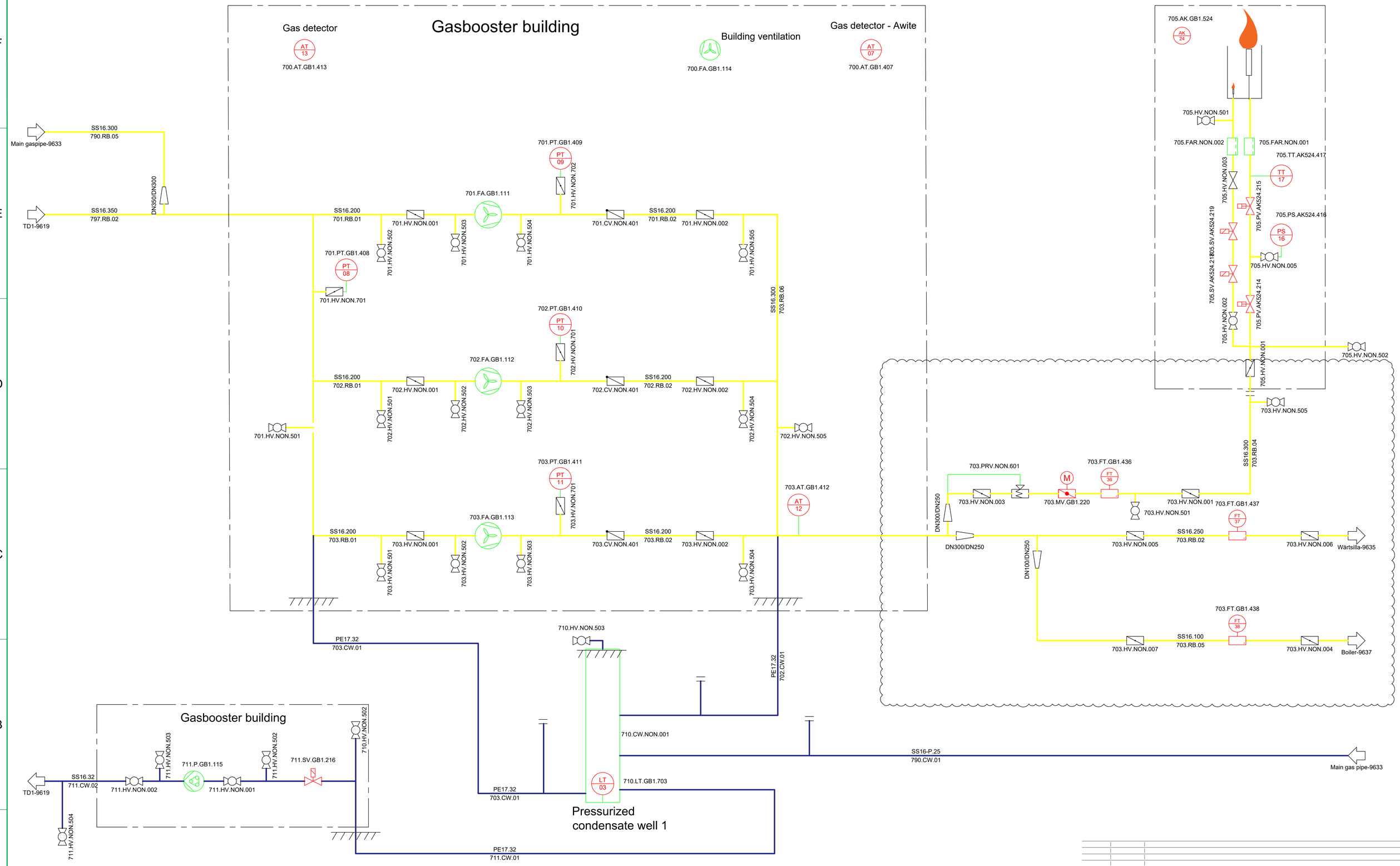


| Rev. Nr.: | Rev. Dato: | Rev. Decription: |
|---|---|---|

| | | | |
|---|---|---|---|
| Builder: | ST1 | | |
| Project: | SLK | | Project nr..1768 |
| Subject: | Gas booster and flare<br>Rev. 6 | | Drawing nr..:<br>9634 |
| Int.: MDC | QC.CM | APP.: | Date: 15-10-2025 |

LUNDSBY RENEWABLE SOLUTIONS

Lundsby Renewable Solutions A/S, Hjarbækvej 65, 8831 Løgstrup
Tlf.: +45 96 49 43 00 Info@lundsby.dk
This Drawing is subject to copywrite and may not be reproduced without permission from Lundsby Renewable Solutions A/S

FORMAT: A1

# Wärtsillä

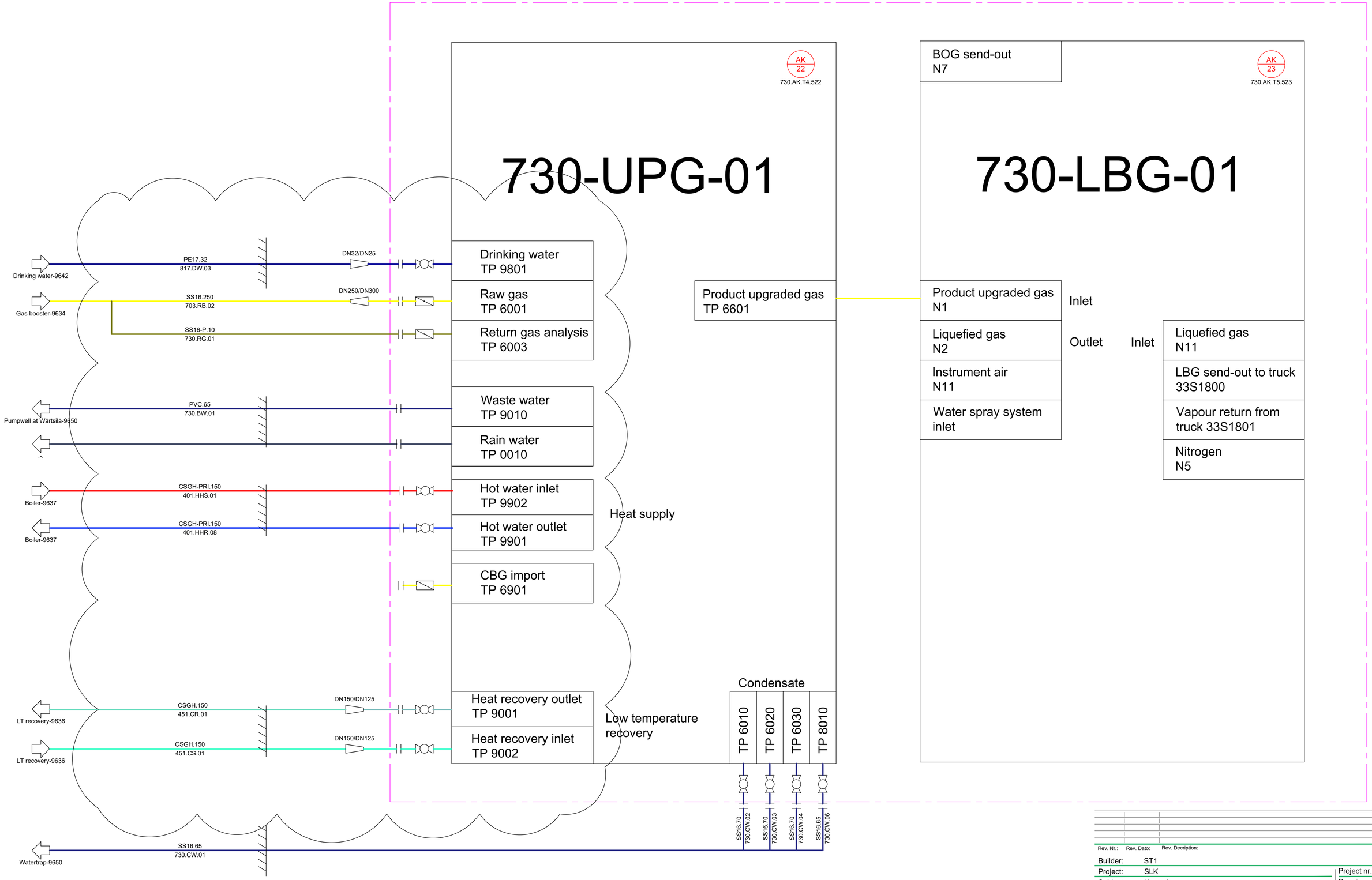


| Rev. Nr.: | Rev. Dato: | Rev. Decription: |
|---|---|---|

| | | | | |
|---|---|---|---|---|
| Builder: | ST1 | | | |
| Project: | SLK | | | Project nr..:1768 |
| Subject: | Upgrade<br>Rev. 6 | | | Drawing nr..:<br>9635 |
| Int.: MDC | QC.CM | APP.: | Date: 15-10-2025 | |

LUNDSBY RENEWABLE SOLUTIONS

Lundsby Renewable Solutions A/S, Hjarbækvej 65, 8831 Løgstrup
Tlf.: +45 96 49 43 00 Info@lundsby.dk
This Drawing is subject to copywrite and may not be reproduced without permission from Lundsby Renewable Solutions A/S

FORMAT: A1

# Heat pump scope

Technology building

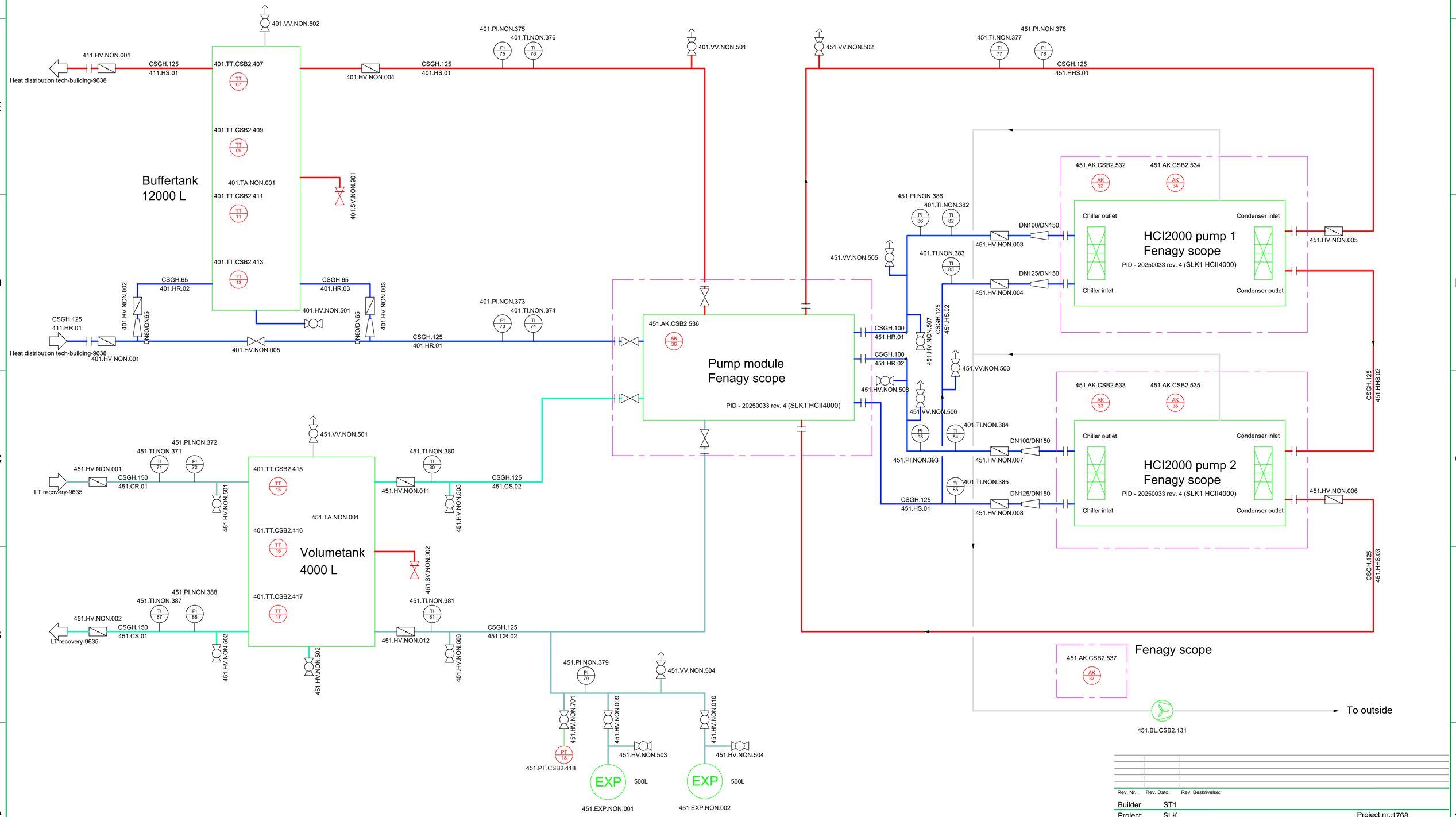


| Rev. Nr.: | Rev. Dato: | Rev. Beskrivelse: |
|---|---|---|

Builder: ST1
Project: SLK
Subject: Heat pumps
Rev. 6

Int.:MDC | QC: CM | APP.: | Date: 15-10-2025

Project nr.:1768
Drawing nr.: 9636

LUNDSBY RENEWABLE SOLUTIONS

Lundsby Biogas A/S, Hjarbækvej 65, 8831 Løgstrup
Tlf.: +45 96 49 43 00 Info@lundsbybiogas.dk

Denne tegning er underlagt copywrite op må ikke reproduceres unden tilladelse fra Lundsbybiogas A/S

FORMAT: A1

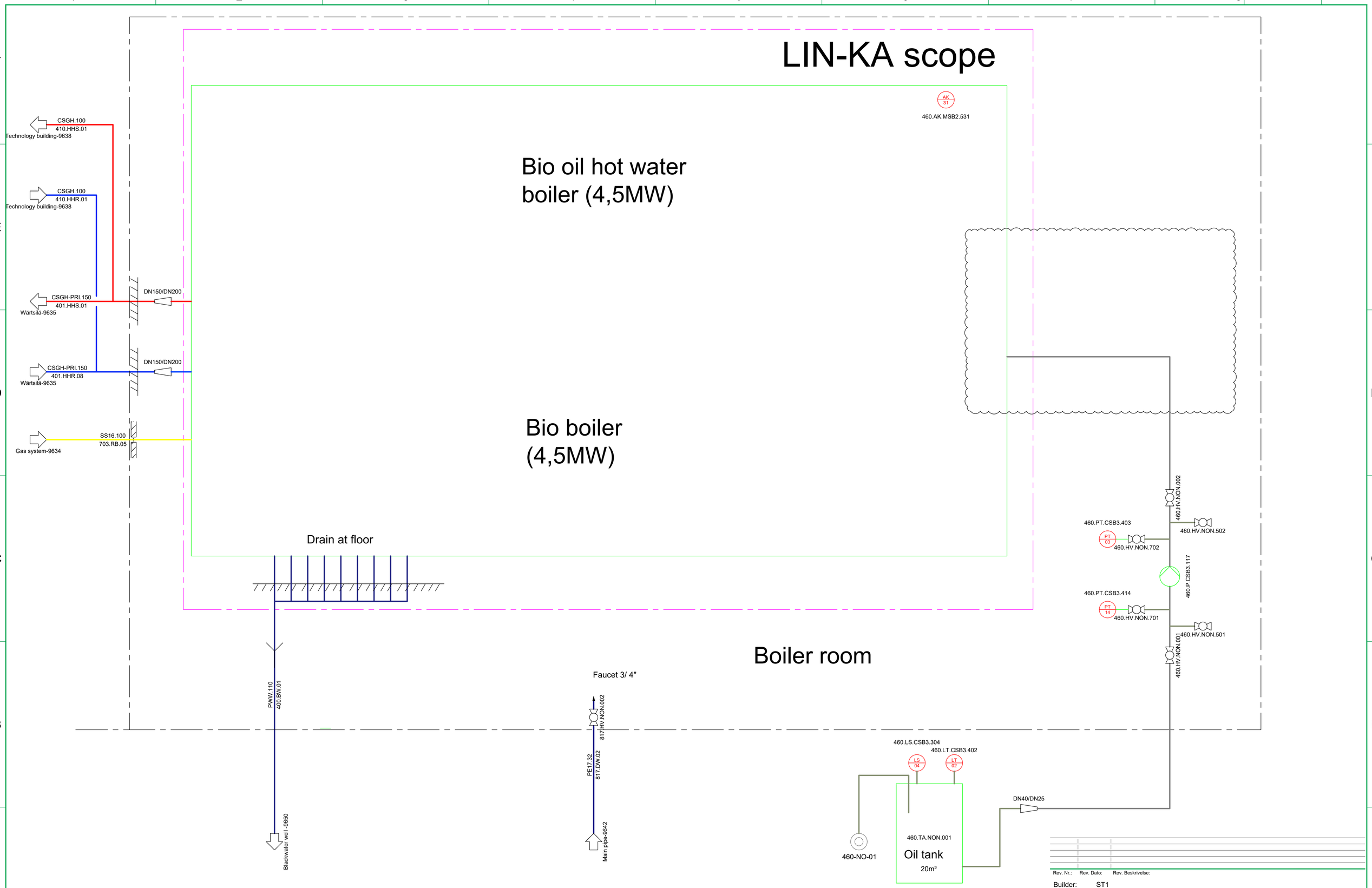


| Rev. Nr.: | Rev. Dato: | Rev. Beskrivelse: |
|---|---|---|

| | | | |
|---|---|---|---|
| Builder: | ST1 | | |
| Project: | SLK | | Project nr.: 1768 |
| Subject: | Boiler room<br>Rev. 6 | | Drawing nr.: 9637 |
| Int.:MDC | QC: CM | APP.: | Date: 15-10-2025 |

LUNDSBY RENEWABLE SOLUTIONS
Lundsby Biogas A/S, Hjarbækvej 65, 8831 Løgstrup
Tlf.: +45 96 49 43 00 Info@lundsbybiogas.dk
Denne tegning er underlagt copyyrrite op må ikke reproduceres uden tilladelse fra Lundsbybiogas A/S

FORMAT: A1

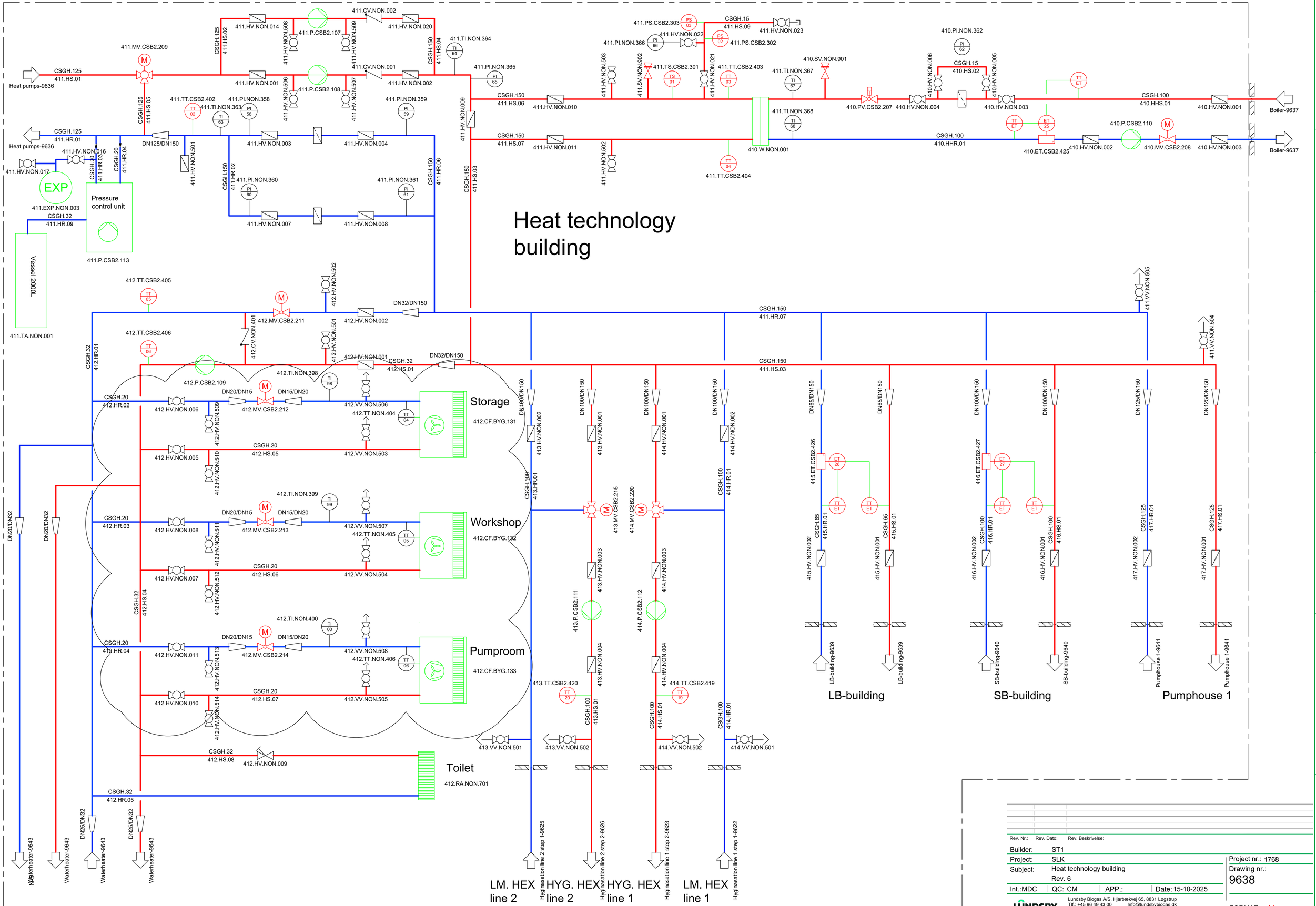


| Rev. Nr.: | Rev. Dato: | Rev. Beskrivelse: |
|---|---|---|

Builder: ST1
Project: SLK
Subject: Heat technology building
Rev. 6
Int.:MDC | QC: CM | APP.: | Date: 15-10-2025

Project nr.: 1768
Drawing nr.: 9638

LUNDSBY RENEWABLE SOLUTIONS

Lundsby Biogas A/S, Hjarbækvej 65, 8831 Løgstrup
Tlf.: +45 96 49 43 00 Info@lundsbybiogas.dk

Denne tegning er underlagt copywrite op må ikke reproduceres uden tilladelse fra Lundsbybiogas A/S

FORMAT: A1

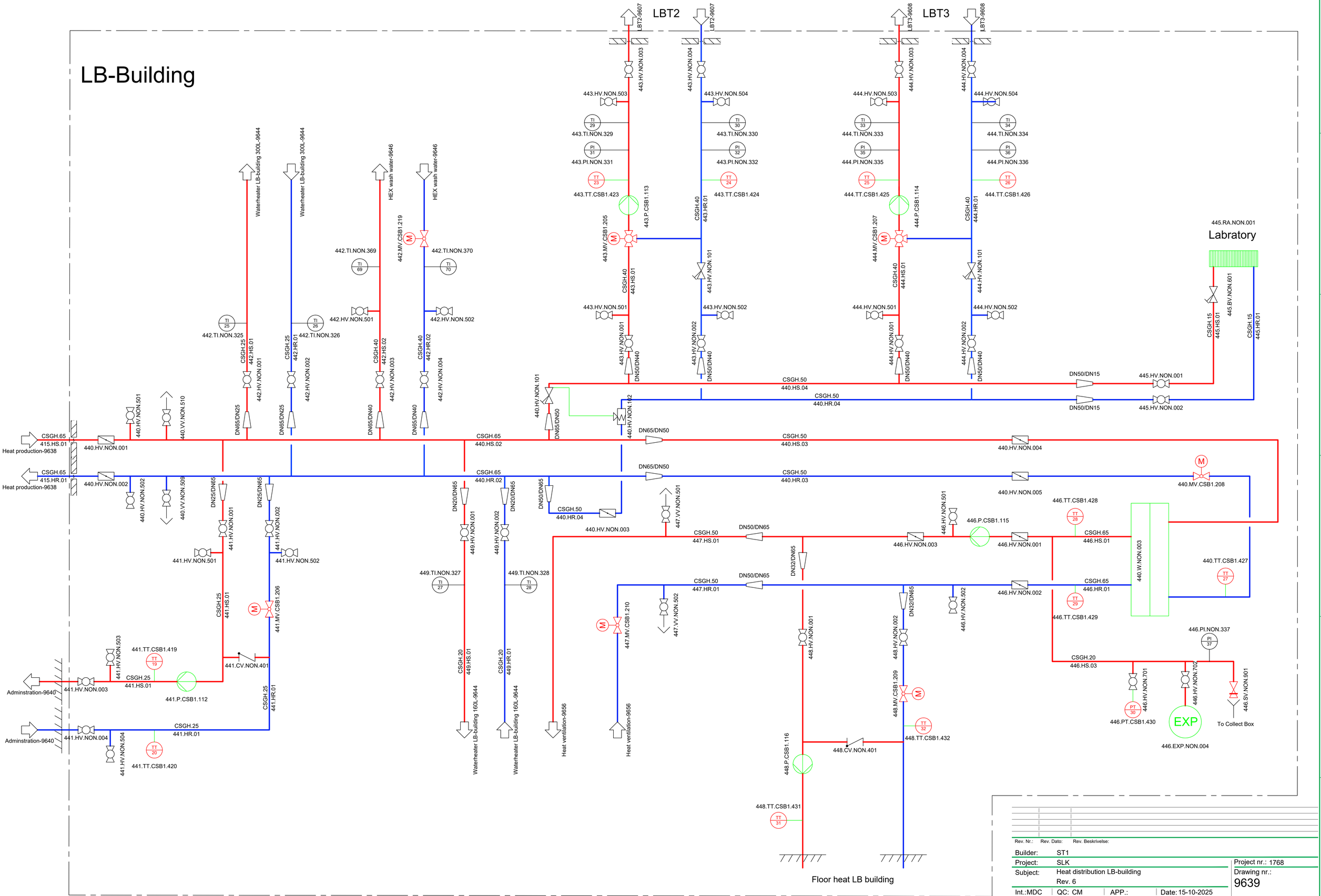


| Rev. Nr.: | Rev. Dato: | Rev. Beskrivelse: |
|---|---|---|

Builder: ST1
Project: SLK
Subject: Heat distribution LB-building
Rev. 6

Int.:MDC | QC: CM | APP.: | Date: 15-10-2025

Project nr.: 1768
Drawing nr.: 9639

LUNDSBY RENEWABLE SOLUTIONS

Lundsby Biogas A/S, Hjarbækvej 65, 8831 Løgstrup
Tlf.: +45 96 49 43 00 Info@lundsbybiogas.dk

Denne tegning er underlagt copyvrite og må ikke reproduceres uden tilladelse fra Lundsbybiogas A/S

FORMAT: A1

# SB-Building

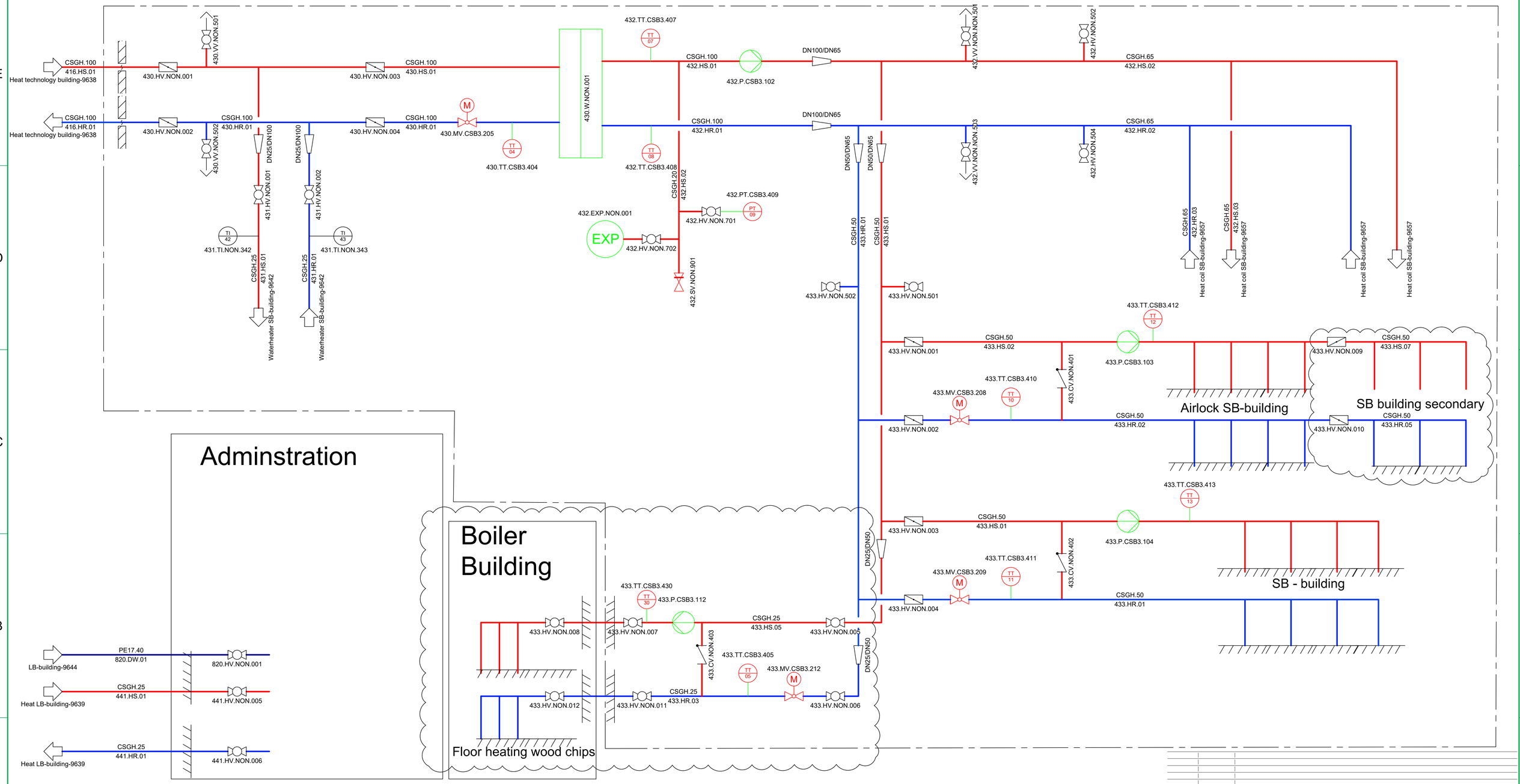


| Rev. Nr.: | Rev. Dato: | Rev. Beskrivelse: |
|---|---|---|

Builder: ST1

Project: SLK

Subject: Heat distribution SB-building
Rev. 6

Int.:MDC | QC: CM | APP.: | Date: 15-10-2025

Project nr.: 1768

Drawing nr.: 9640

LUNDSBY RENEWABLE SOLUTIONS

Lundsby Biogas A/S, Hjarbækvej 65, 8831 Løgstrup
Tlf.: +45 96 49 43 00 Info@lundsbybiogas.dk

Denne tegning er underlagt copywrite op må ikke reproduceres unden tilladelse fra Lundsbybiogas A/S

FORMAT: A1

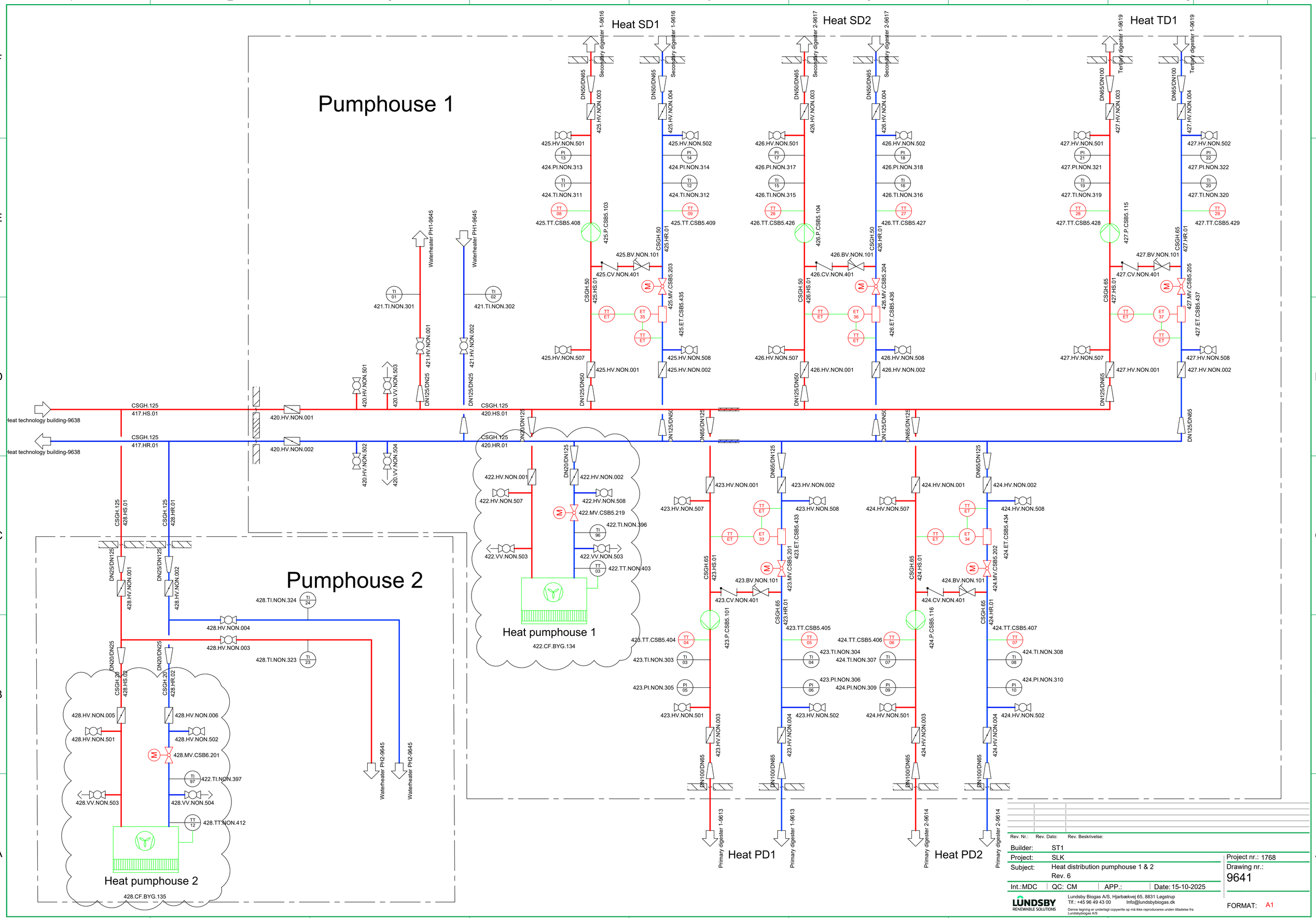
Heat SD1
Heat SD2
Heat TD1
Pumphouse 1
Pumphouse 2
Secondary digester 1-9616
Secondary digester 2-9617
Tertiary digester 1-9619
Waterheater PH1-9645
Waterheater PH2-9645
Heat technology building-9638
CSGH.125
417.HS.01
417.HR.01
420.HS.01
420.HR.01
420.HV.NON.001
420.HV.NON.002
420.HV.NON.501
420.HV.NON.502
420.VV.NON.503
420.VV.NON.504
421.TI.NON.301
421.TI.NON.302
421.HV.NON.001
421.HV.NON.002
425.HV.NON.501
425.HV.NON.502
424.PI.NON.313
424.PI.NON.314
424.TI.NON.311
424.TI.NON.312
425.TT.CSB5.408
425.TT.CSB5.409
425.P.CSB5.103
425.BV.NON.101
425.CV.NON.401
425.MV.CSB5.203
425.ET.CSB5.435
425.HS.01
425.HR.01
CSGH.50
425.HV.NON.507
425.HV.NON.508
425.HV.NON.001
425.HV.NON.002
426.HV.NON.501
426.HV.NON.502
426.PI.NON.317
426.PI.NON.318
426.TI.NON.315
426.TI.NON.316
426.TT.CSB5.426
426.TT.CSB5.427
426.P.CSB5.104
426.BV.NON.101
426.CV.NON.401
426.MV.CSB5.204
426.ET.CSB5.436
426.HS.01
426.HR.01
426.HV.NON.507
426.HV.NON.508
426.HV.NON.001
426.HV.NON.002
427.HV.NON.501
427.HV.NON.502
427.PI.NON.321
427.PI.NON.322
427.TI.NON.319
427.TI.NON.320
427.TT.CSB5.428
427.TT.CSB5.429
427.P.CSB5.115
427.BV.NON.101
427.CV.NON.401
427.MV.CSB5.205
427.ET.CSB5.437
427.HS.01
427.HR.01
CSGH.65
427.HV.NON.507
427.HV.NON.508
427.HV.NON.001
427.HV.NON.002
DN50/DN65
DN65/DN100
DN125/DN25
DN125/DN50
DN125/DN65
DN20/DN125
DN65/DN125
DN25/DN125
DN20/DN25
DN100/DN65
422.HV.NON.001
422.HV.NON.002
422.HV.NON.507
422.HV.NON.508
422.MV.CSB5.219
422.TI.NON.396
422.VV.NON.503
422.TT.NON.403
422.CF.BYG.134
Heat pumphouse 1
423.HV.NON.001
423.HV.NON.002
423.HV.NON.507
423.HV.NON.508
423.ET.CSB5.433
423.MV.CSB5.201
423.BV.NON.101
423.CV.NON.401
423.P.CSB5.101
423.TT.CSB5.404
423.TI.NON.303
423.PI.NON.305
423.HV.NON.501
423.HV.NON.502
423.TT.CSB5.405
423.TI.NON.304
423.PI.NON.306
424.HV.NON.001
424.HV.NON.002
424.HV.NON.507
424.HV.NON.508
424.ET.CSB5.434
424.MV.CSB5.202
424.BV.NON.101
424.CV.NON.401
424.P.CSB5.116
424.TT.CSB5.406
424.TI.NON.307
424.PI.NON.309
424.HV.NON.501
424.HV.NON.502
424.TT.CSB5.407
424.TI.NON.308
424.PI.NON.310
428.HS.01
428.HR.01
428.HV.NON.001
428.HV.NON.002
428.TI.NON.324
428.HV.NON.004
428.HV.NON.003
428.TI.NON.323
CSGH.20
428.HS.02
428.HR.02
428.HV.NON.005
428.HV.NON.006
428.HV.NON.501
428.HV.NON.502
428.MV.CSB6.201
422.TI.NON.397
428.VV.NON.503
428.VV.NON.504
428.TT.NON.412
428.CF.BYG.135
Heat pumphouse 2
Primary digester 1-9613
Primary digester 2-9614
Heat PD1
Heat PD2
Rev. Nr.:
Rev. Dato:
Rev. Beskrivelse:
Builder: ST1
Project: SLK
Subject: Heat distribution pumphouse 1 & 2
Rev. 6
Int.:MDC
QC: CM
APP.:
Date: 15-10-2025
Project nr.: 1768
Drawing nr.:
9641
LUNDSBY RENEWABLE SOLUTIONS
Lundsby Biogas A/S, Hjarbækvej 65, 8831 Løgstrup
Tlf.: +45 96 49 43 00
Info@lundsbybiogas.dk
Denne tegning er underlagt copywrite op må ikke reproduceres uden tilladelse fra Lundsbybiogas A/S
FORMAT: A1

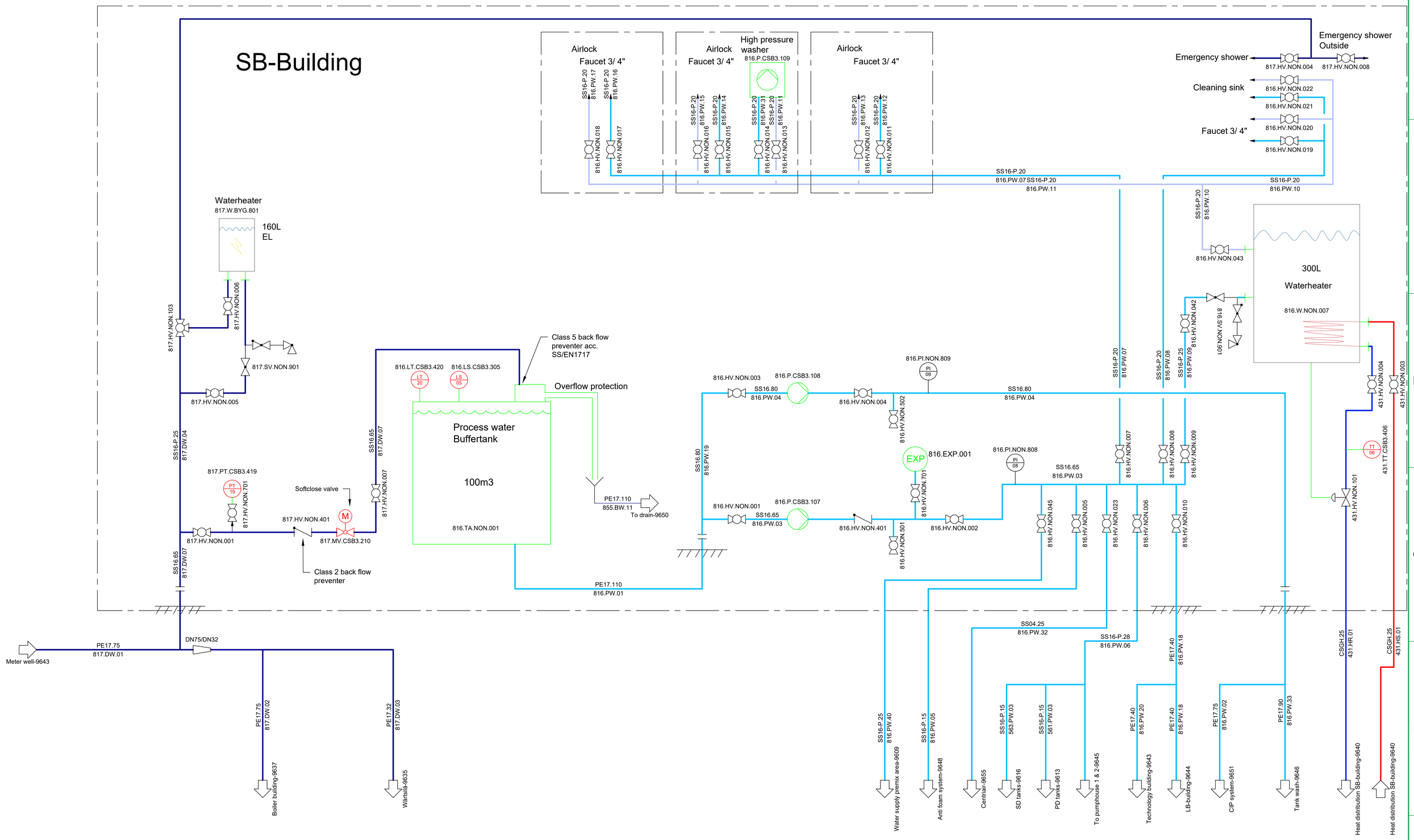


| Rev. Nr.: | Rev. Dato: | Rev. Beskrivelse: |
|---|---|---|

Builder: ST1

Project: SLK

Subject: Water distribution SB-building
Rev. 6

Int.:MDC | QC:CM | APP.: | Date: 15-10-2025

Project nr.: 1768

Drawing nr.: 9642

LUNDSBY RENEWABLE SOLUTIONS
Lundsby Biogas A/S, Hjarbækvej 65, 8831 Løgstrup
Tlf.: +45 96 49 43 00 Info@lundsbybiogas.dk
Denne tegning er underlagt copywrite op må ikke reproduceres unden tilladelse fra Lundsbybiogas A/S

FORMAT: A1

# Technology building

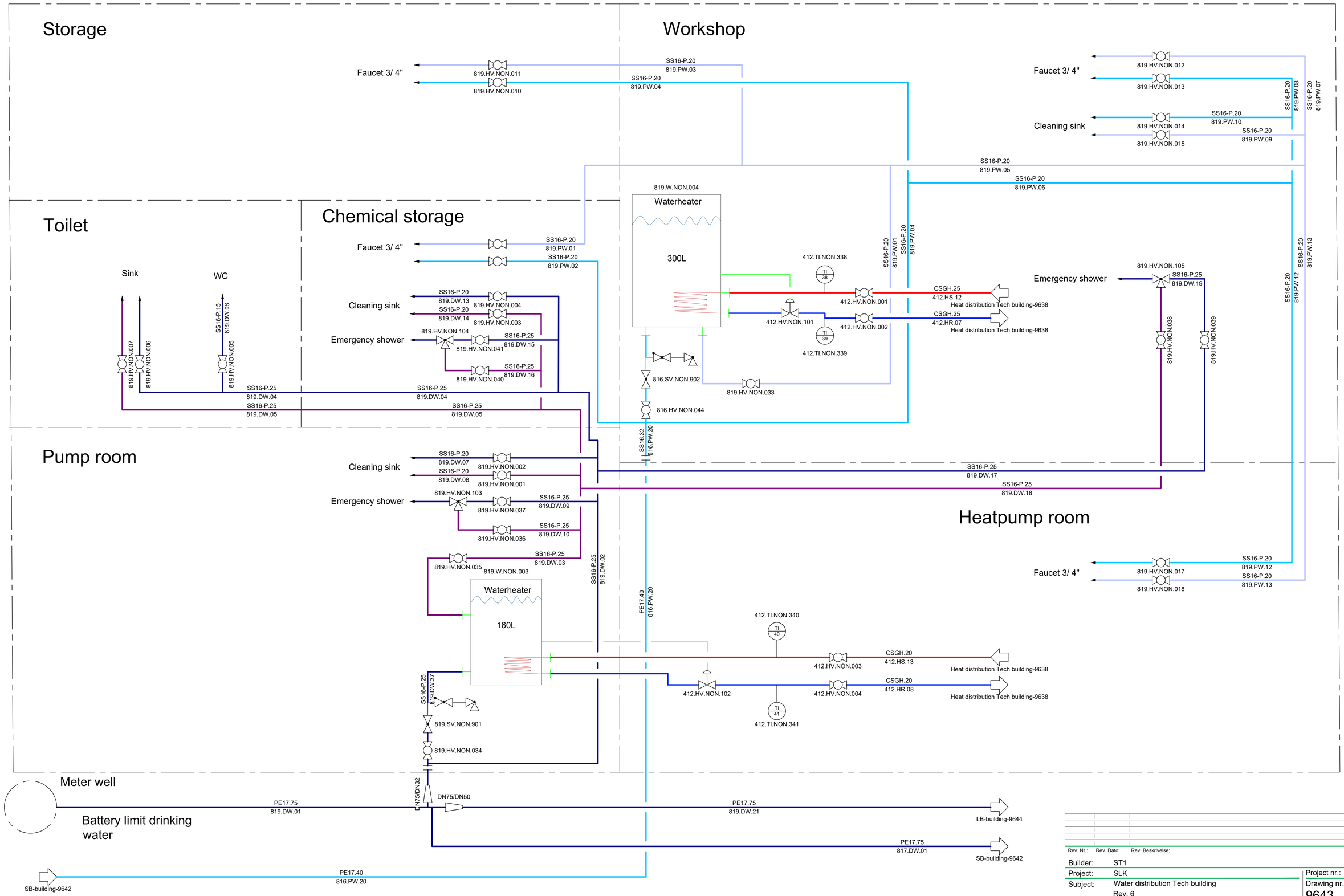


| Rev. Nr.: | Rev. Dato: | Rev. Beskrivelse: |
|---|---|---|

Builder: ST1
Project: SLK
Subject: Water distribution Tech building
Rev. 6

Int.:MDC | QC:CM | APP.: | Date: 15-10-2025

Project nr.: 1768
Drawing nr.: 9643

LUNDSBY RENEWABLE SOLUTIONS
Lundsby Biogas A/S, Hjarbækvej 65, 8831 Løgstrup
Tlf.: +45 96 49 43 00 Info@lundsbybiogas.dk
Denne tegning er underlagt copywrite op må ikke reproduceres unden tilladelse fra Lundsbybiogas A/S

FORMAT: A1

# LB-building

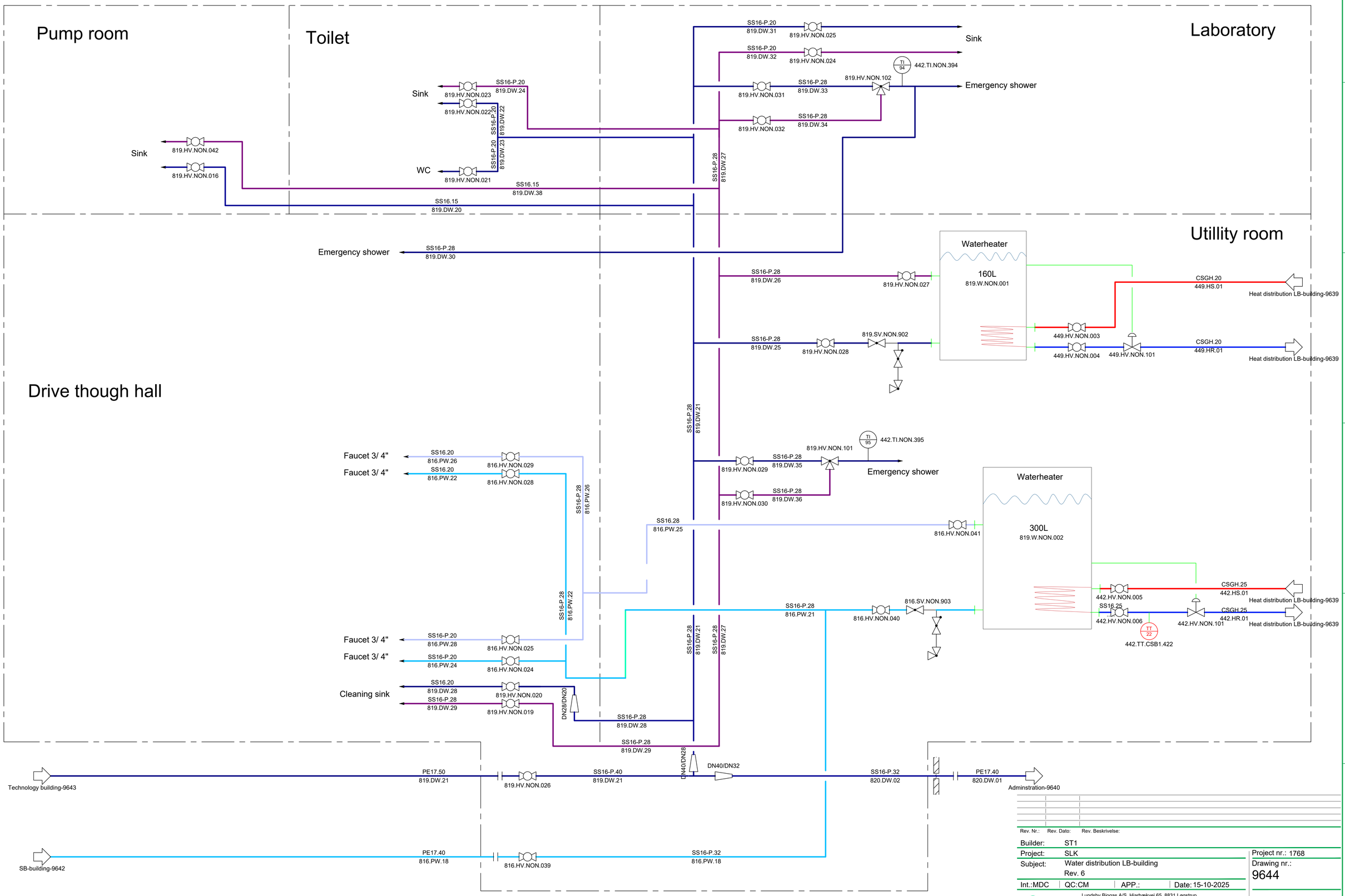


| Rev. Nr.: | Rev. Dato: | Rev. Beskrivelse: |
|---|---|---|

| | | | |
|---|---|---|---|
| Builder: | ST1 | | |
| Project: | SLK | | Project nr.: 1768 |
| Subject: | Water distribution LB-building<br>Rev. 6 | | Drawing nr.:<br>9644 |
| Int.:MDC | QC:CM | APP.: | Date: 15-10-2025 |

LUNDSBY RENEWABLE SOLUTIONS

Lundsby Biogas A/S, Hjarbækvej 65, 8831 Løgstrup
Tlf.: +45 96 49 43 00 Info@lundsbybiogas.dk

Denne tegning er underlagt copywrite op må ikke reproduceres uden tilladelse fra Lundsbybiogas A/S

FORMAT: A1

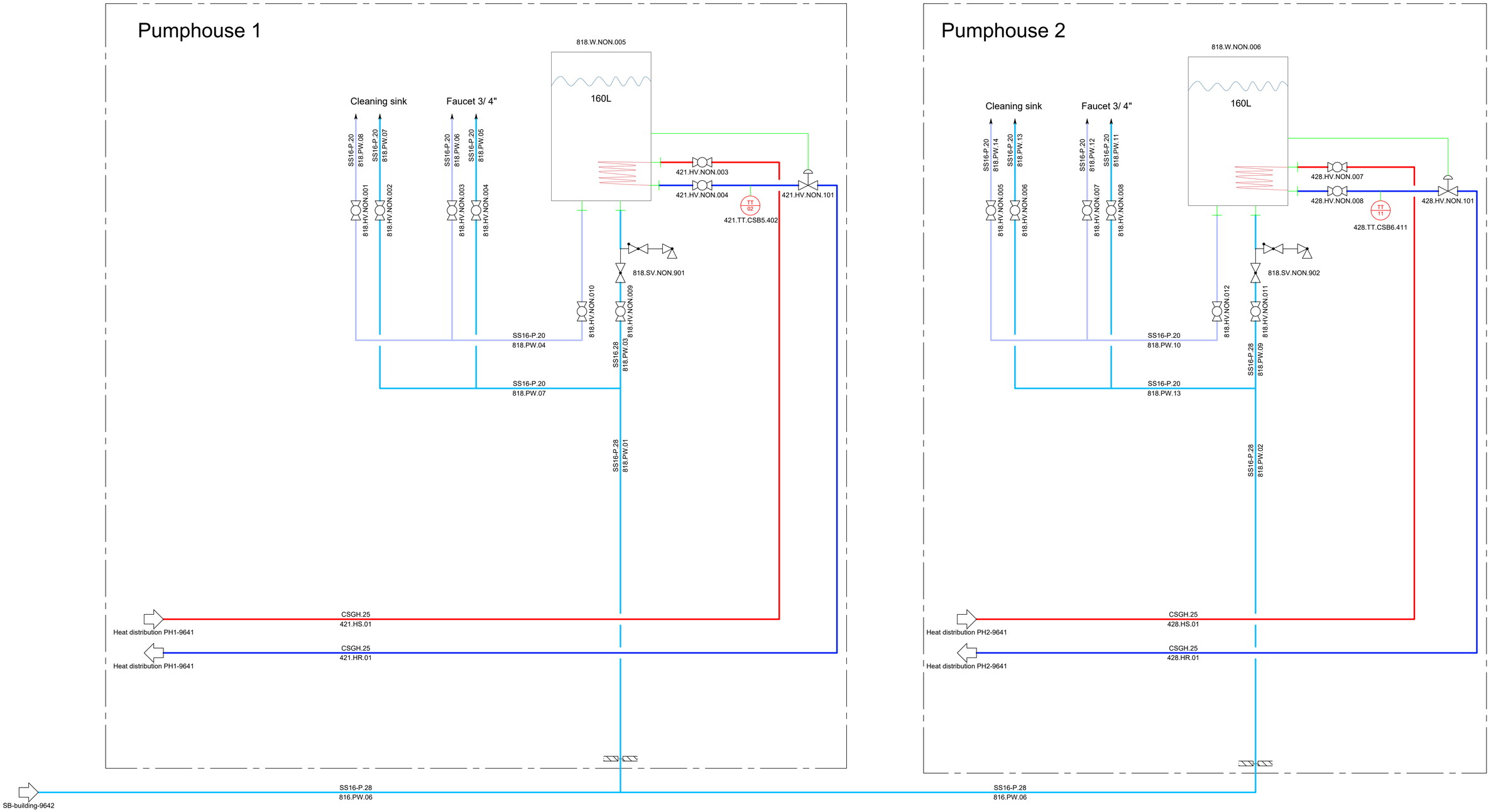


| Rev. Nr.: | Rev. Dato: | Rev. Beskrivelse: |
|---|---|---|

Builder: ST1

Project: SLK

Subject: Water distribution pumphouse 1 & 2
Rev. 6

Int.:MDC | QC:CM | APP.: | Date: 15-10-2025

Project nr.: 1768

Drawing nr.: 9645

FORMAT: A1

LUNDSBY RENEWABLE SOLUTIONS
Lundsby Biogas A/S, Hjarbækvej 65, 8831 Løgstrup
Tlf.: +45 96 49 43 00 Info@lundsbybiogas.dk
Denne tegning er underlagt copywrite op må ikke reproduceres uden tilladelse fra Lundsbybiogas A/S

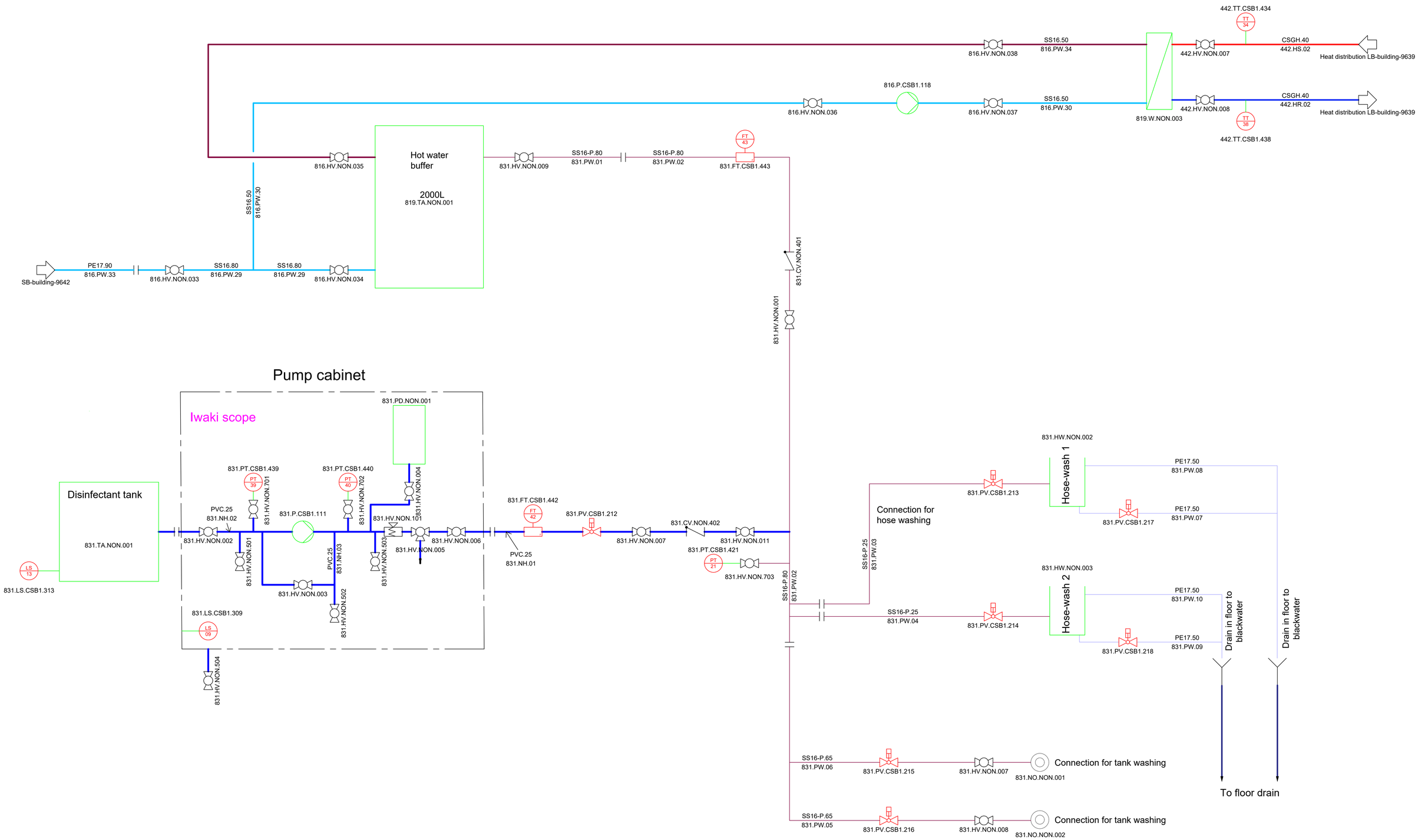


| Rev. Nr.: | Rev. Dato: | Rev. Beskrivelse: |
|---|---|---|

Builder: ST1

Project: SLK

Subject: Wash system
Rev. 6

Int.:MDC | QC: CM | APP.: | Date: 15-10-2025

Sags nr.: 1768

Tegn. nr.: 9646

FORMAT: A1

LUNDSBY RENEWABLE SOLUTIONS
Lundsby Biogas A/S, Hjarbækvej 65, 8831 Løgstrup
Tlf.: +45 96 49 43 00 Info@lundsbybiogas.dk

Denne tegning er underlagt copywrite op må ikke reproduceres unden tilladelse fra Lundsbybiogas A/S

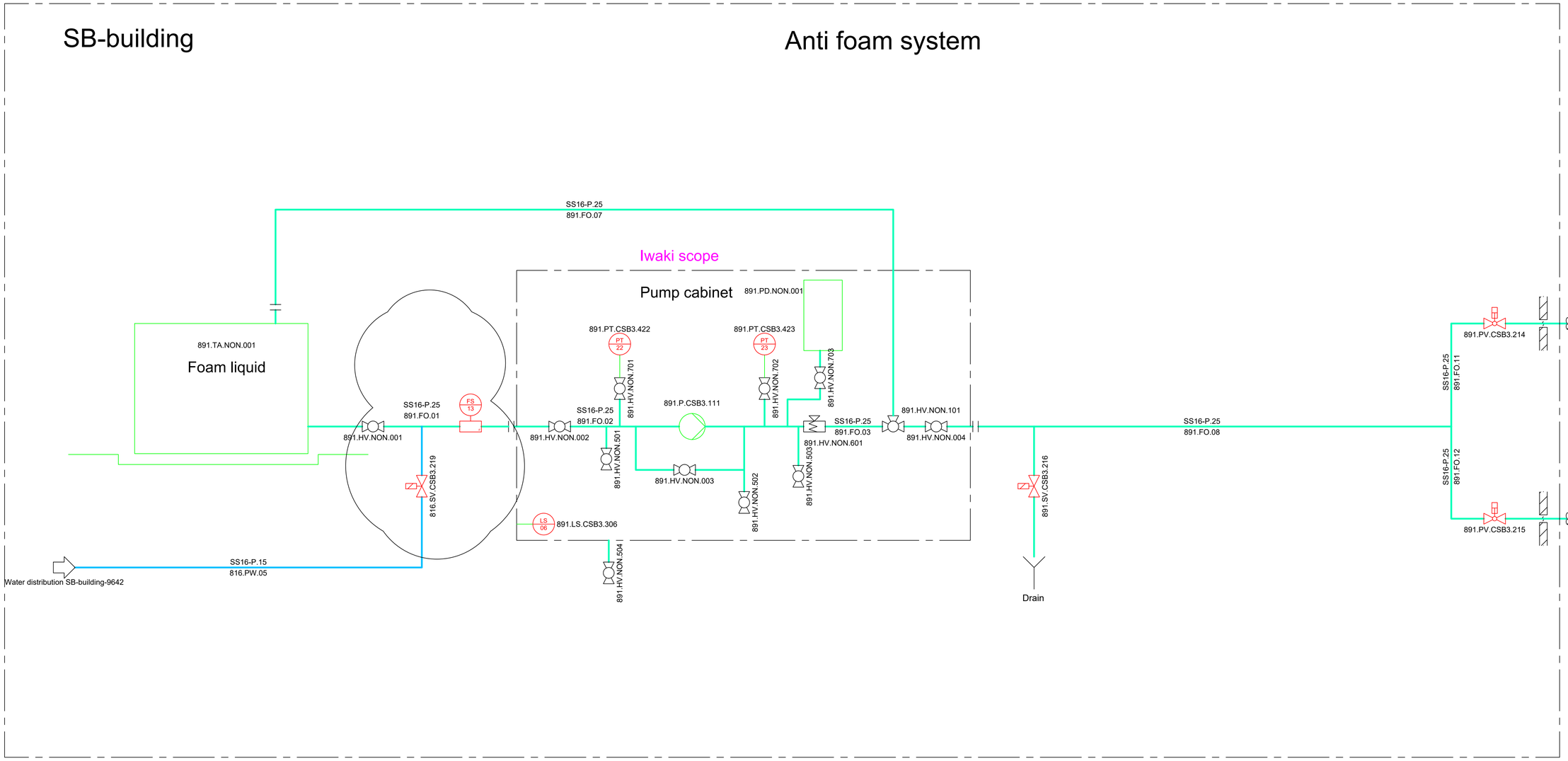


| Rev. Nr.: | Rev. Dato: | Rev. Decription: |
|---|---|---|

Builder: ST1

Project: SLK

Subject: Anti foam system
Rev. 6

Int.: MDC | QC.CM | APP.: | Date: 15-10-2025

Project nr..1768

Drawing nr..:
9648

FORMAT: A1

LUNDSBY RENEWABLE SOLUTIONS
Lundsby Renewable Solutions A/S, Hjarbækvej 65, 8831 Løgstrup
Tlf.: +45 96 49 43 00 Info@lundsby.dk
This Drawing is subject to copywrite and may not be reproduced without permission from Lundsby Renewable Solutions A/S

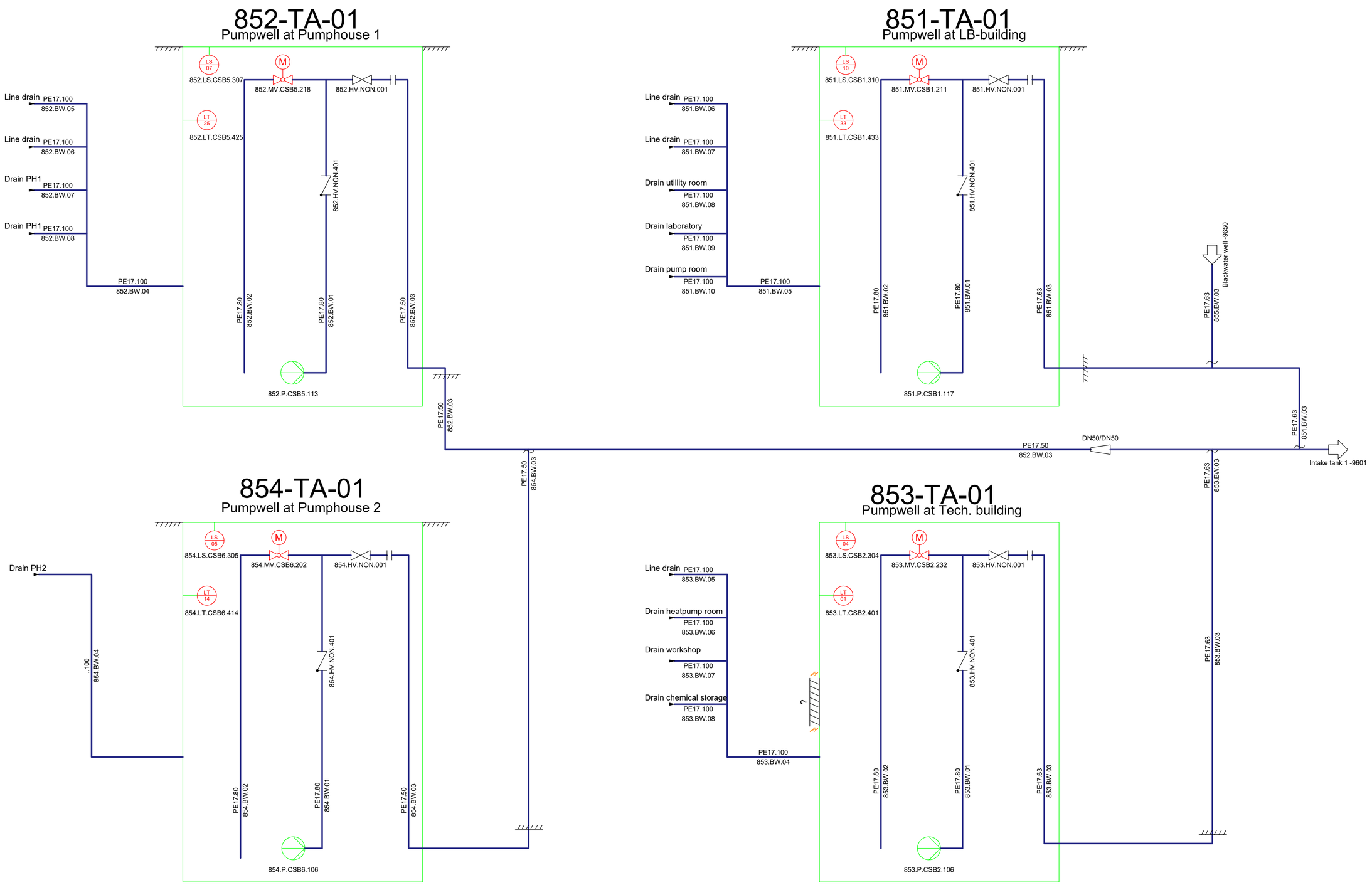


| Rev. Nr.: | Rev. Dato: | Rev. Decription: |
|---|---|---|

| | | | |
|---|---|---|---|
| Builder: | ST1 | | |
| Project: | SLK | | Project nr..1768 |
| Subject: | Blackwater wells<br>Rev. 6 | | Drawing nr..:<br>9649 |
| Int.: MDC | QC.CM | APP.: | Date: 15-10-2025 |

LUNDSBY RENEWABLE SOLUTIONS

Lundsby Renewable Solutions A/S, Hjarbækvej 65, 8831 Løgstrup
Tlf.: +45 96 49 43 00 Info@lundsby.dk
This Drawing is subject to copywrite and may not be reproduced without permission from Lundsby Renewable Solutions A/S

FORMAT: A1

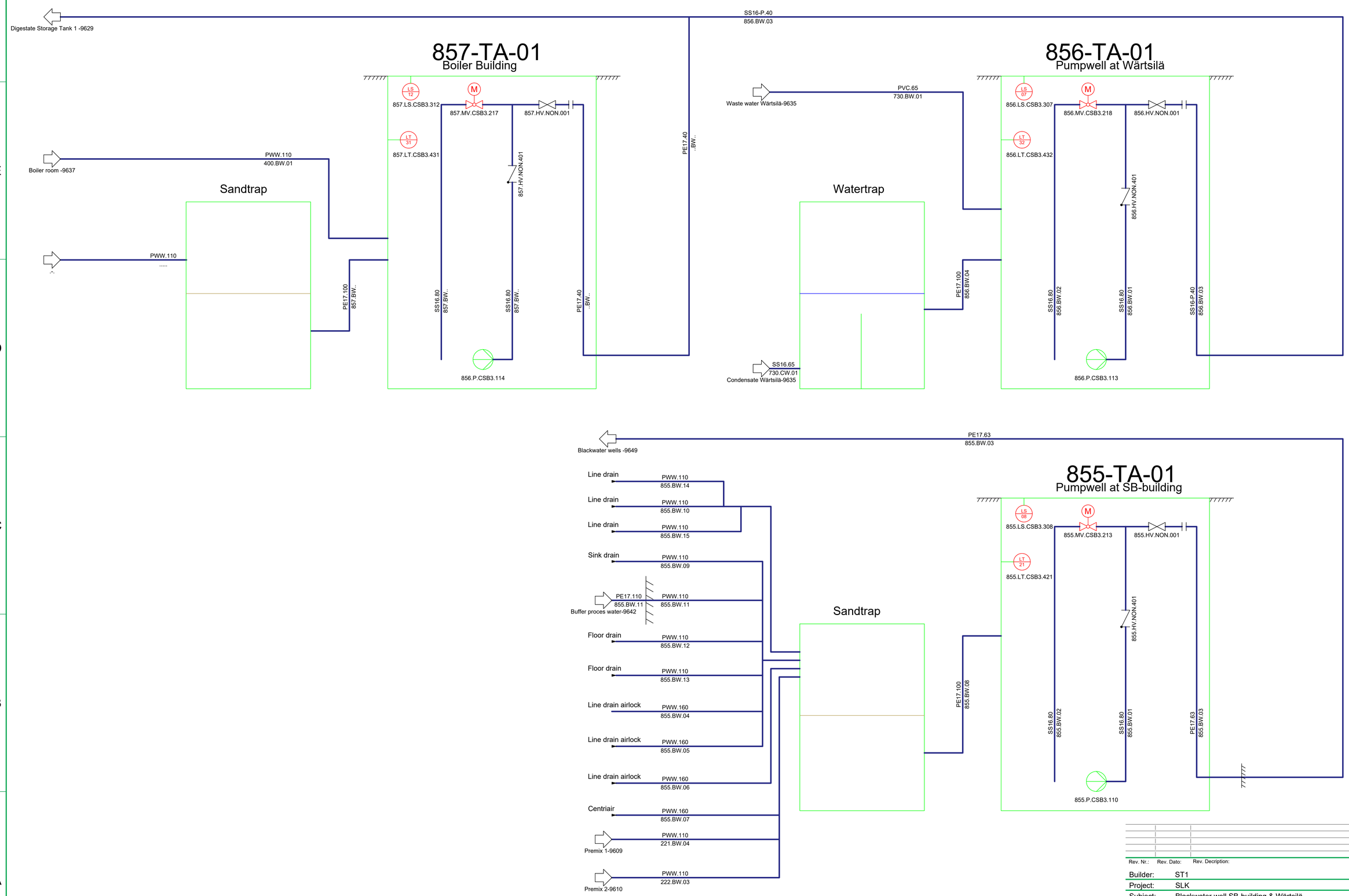


| Rev. Nr.: | Rev. Dato: | Rev. Decription: |
|---|---|---|

Builder: ST1

Project: SLK

Subject: Blackwater well SB-building & Wärtsilä
Rev. 6

Int.: MDC | QC.CM | APP.: | Date: 15-10-2025

Project nr..: 1768

Drawing nr..:
9650

FORMAT: A1

LUNDSBY RENEWABLE SOLUTIONS
Lundsby Renewable Solutions A/S, Hjarbækvej 65, 8831 Løgstrup
Tlf.: +45 96 49 43 00 Info@lundsby.dk
This Drawing is subject to copywrite and may not be reproduced without permission from Lundsby Renewable Solutions A/S

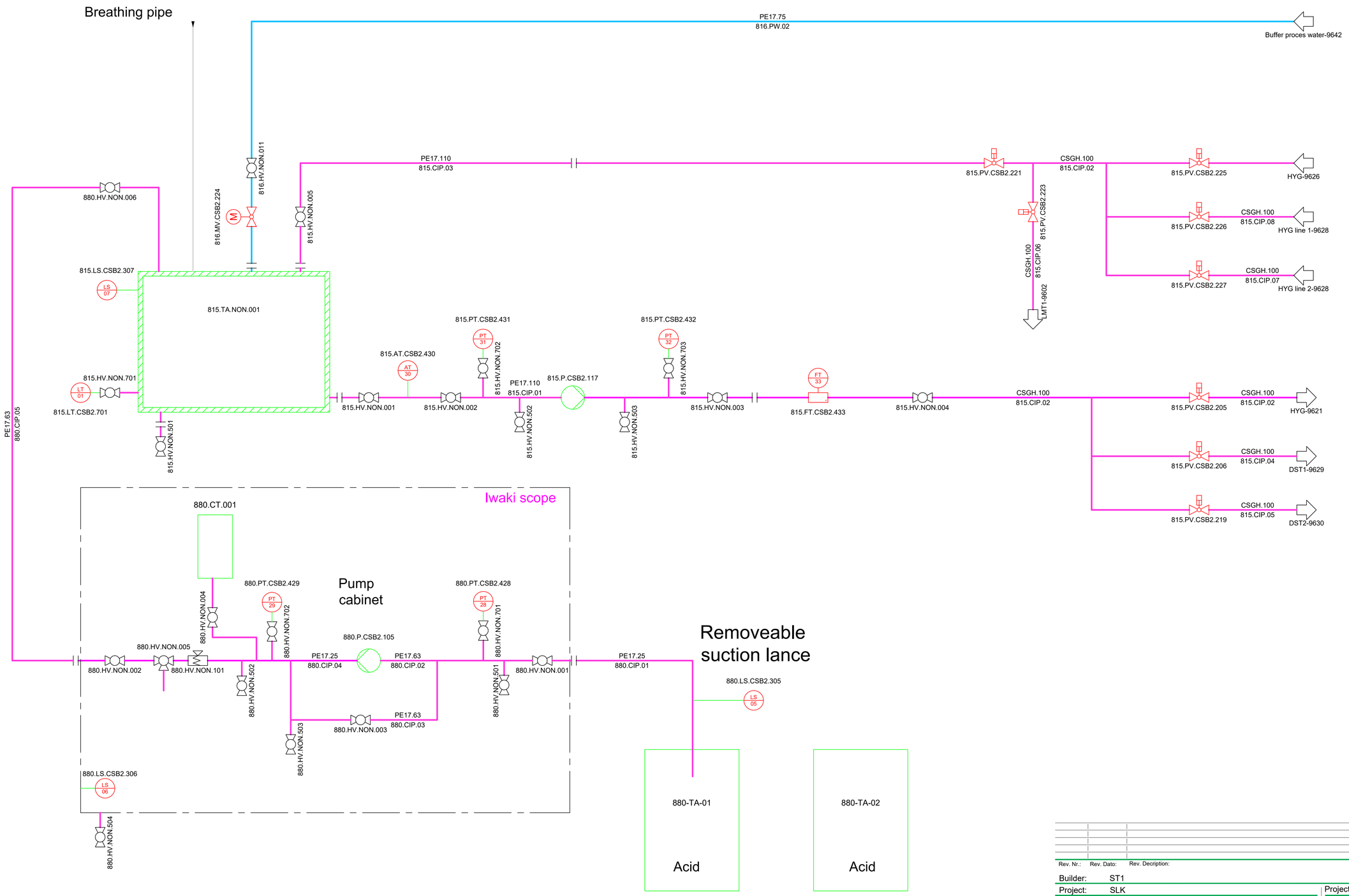


| Rev. Nr.: | Rev. Dato: | Rev. Decription: |
|---|---|---|

| | | | |
|---|---|---|---|
| Builder: | ST1 | | |
| Project: | SLK | | Project nr..:1768 |
| Subject: | CIP facility<br>Rev. 6 | | Drawing nr..:<br>9651 |
| Int.: MDC | QC.CM | APP.: | Date: 15-10-2025 |

LUNDSBY RENEWABLE SOLUTIONS
Lundsby Renewable Solutions A/S, Hjarbækvej 65, 8831 Løgstrup
Tlf.: +45 96 49 43 00 Info@lundsby.dk
This Drawing is subject to copywrite and may not be reproduced without permission from Lundsby Renewable Solutions A/S

FORMAT: A1

# Pumphouse 1
## JA Trykluft scope

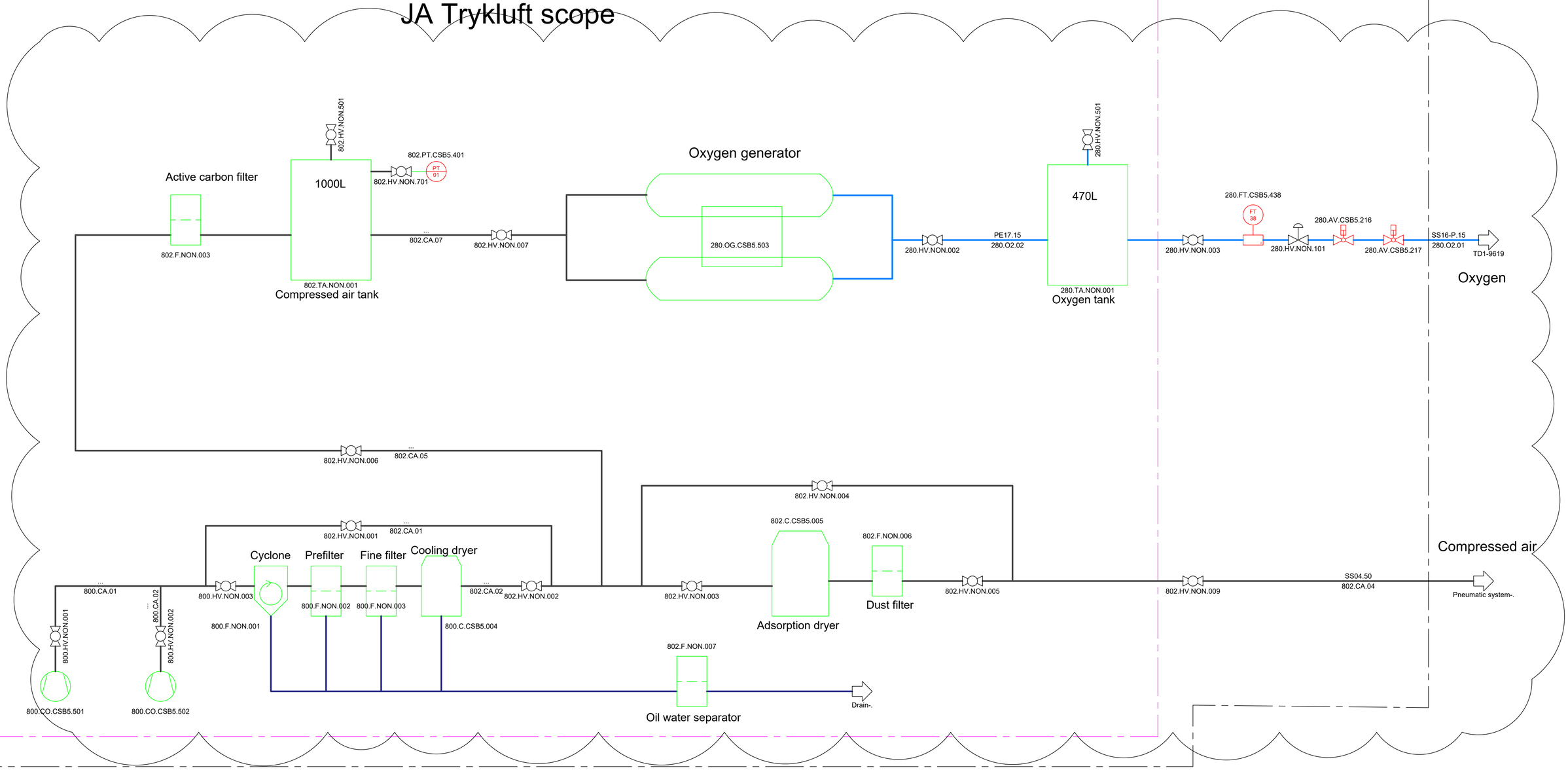


| Rev. Nr.: | Rev. Dato: | Rev. Decription: |
|---|---|---|

| | | | |
|---|---|---|---|
| Builder: | ST1 | | |
| Project: | SLK | | Project nr..:1768 |
| Subject: | Compressed air & Oxygen<br>Rev. 6 | | Drawing nr..:<br>9652 |
| Int.: MDC | QC.CM | APP.: | Date: 15-10-2025 |

LUNDSBY RENEWABLE SOLUTIONS
Lundsby Renewable Solutions A/S, Hjarbækvej 65, 8831 Løgstrup
Tlf.: +45 96 49 43 00 Info@lundsby.dk
This Drawing is subject to copywrite and may not be reproduced without permission from Lundsby Renewable Solutions A/S

FORMAT: A1

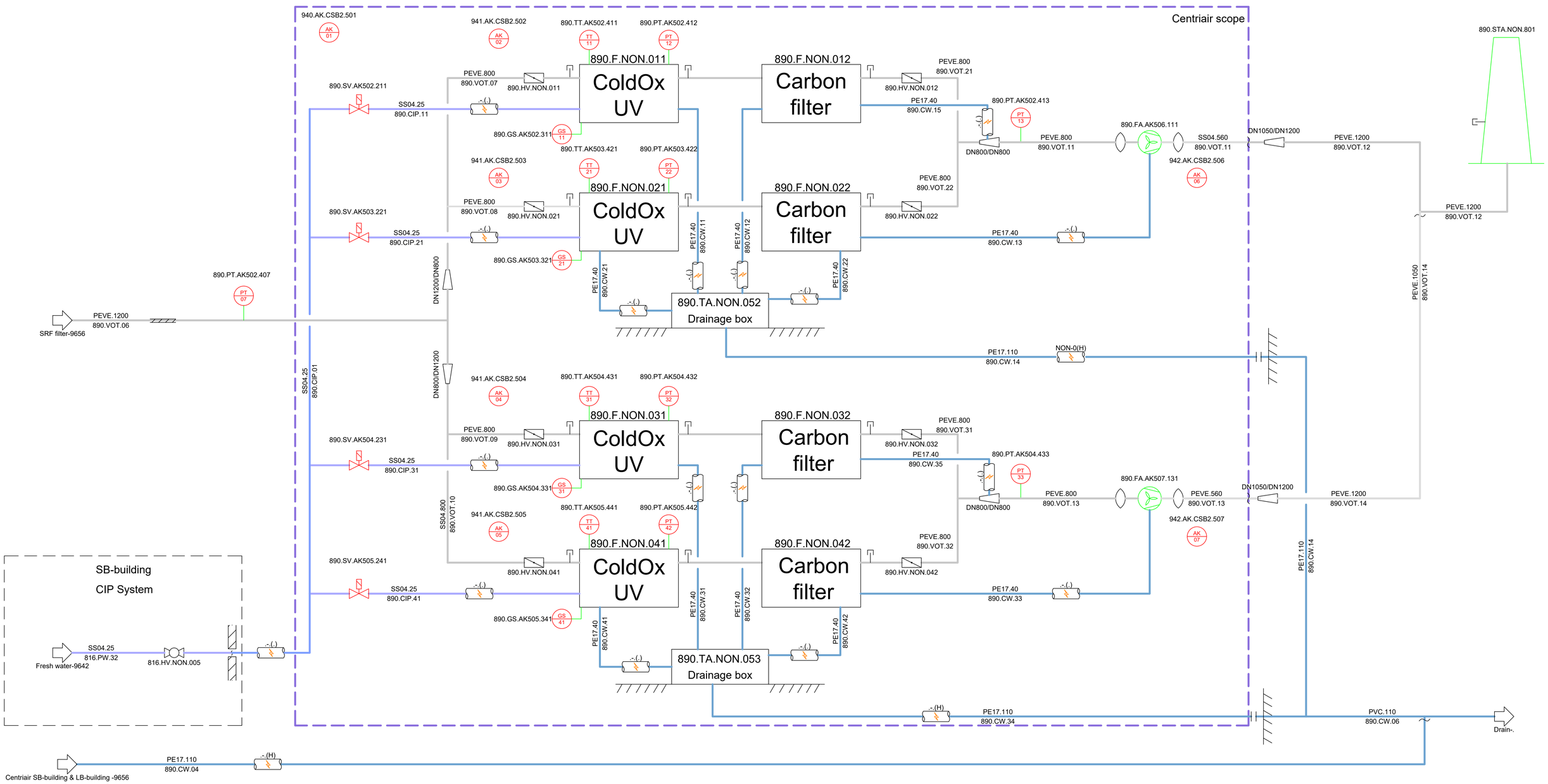


| Rev. Nr.: | Rev. Dato: | Rev. Decription: |
|---|---|---|

| | | | |
|---|---|---|---|
| Builder: | ST1 | | |
| Project: | SLK | | Project nr..1768 |
| Subject: | Centriair ColdOx system<br>Rev. 6 | | Drawing nr..: 9655 |
| Int.: MDC | QC.CM | APP.: | Date: 15-10-2025 |

LUNDSBY RENEWABLE SOLUTIONS
Lundsby Renewable Solutions A/S, Hjarbækvej 65, 8831 Løgstrup
Tlf.: +45 96 49 43 00 Info@lundsby.dk
This Drawing is subject to copywrite and may not be reproduced without permission from Lundsby Renewable Solutions A/S

FORMAT: A1

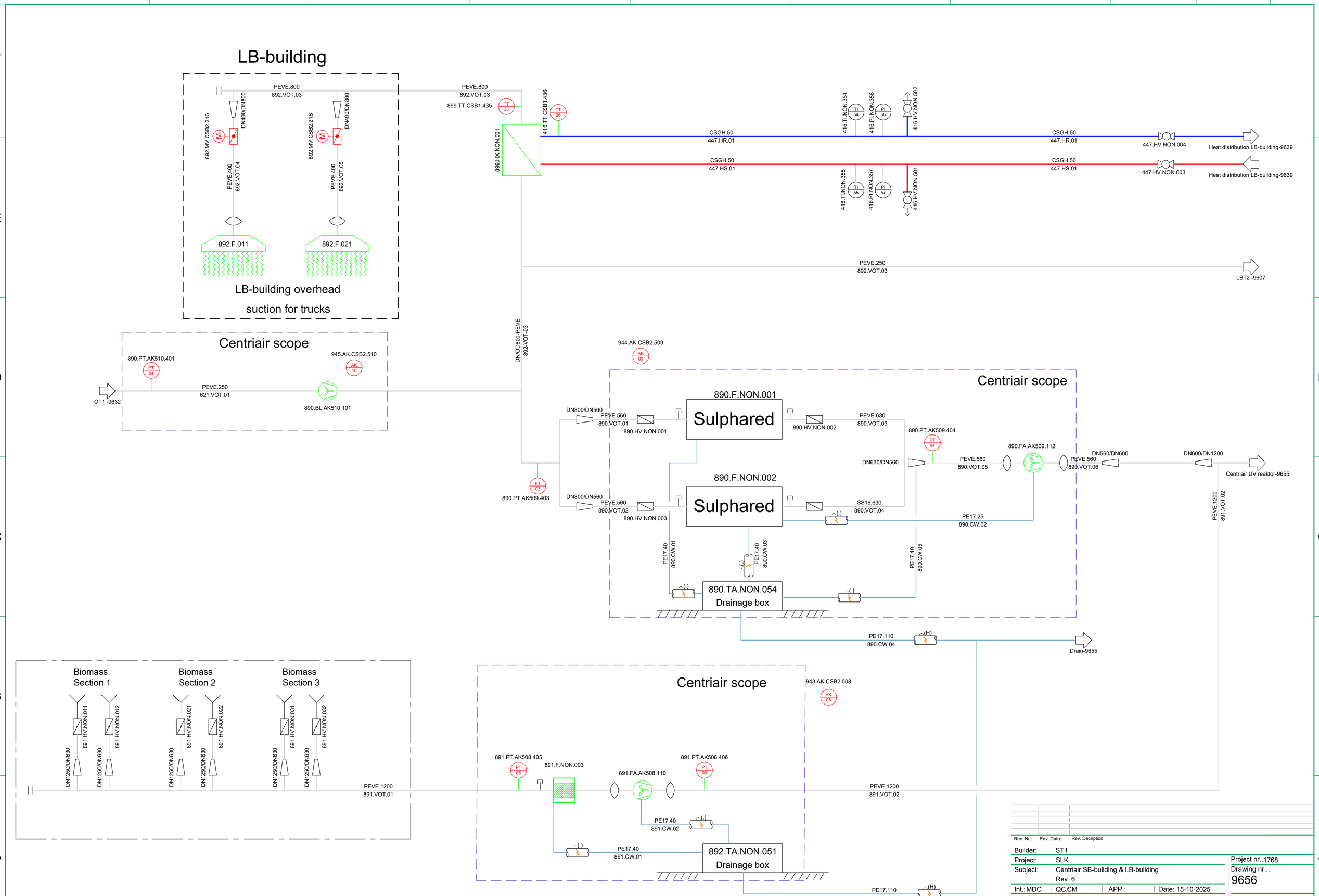


| Rev. Nr.: | Rev. Dato: | Rev. Decription: |
|---|---|---|

| | | | |
|---|---|---|---|
| Builder: | ST1 | | |
| Project: | SLK | | Project nr..1768 |
| Subject: | Centriair SB-building & LB-building<br>Rev. 6 | | Drawing nr..:<br>9656 |
| Int.: MDC | QC.CM | APP.: | Date: 15-10-2025 |

LUNDSBY RENEWABLE SOLUTIONS

Lundsby Renewable Solutions A/S, Hjarbækvej 65, 8831 Løgstrup
Tlf.: +45 96 49 43 00 Info@lundsby.dk

This Drawing is subject to copywrite and may not be reproduced without permission from Lundsby Renewable Solutions A/S

FORMAT: A1

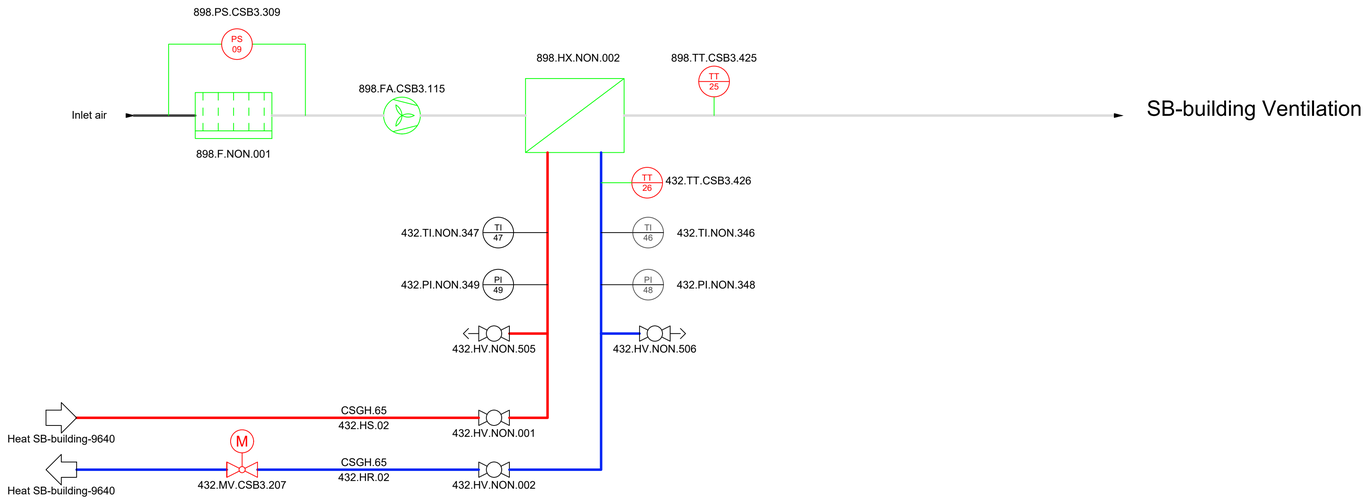


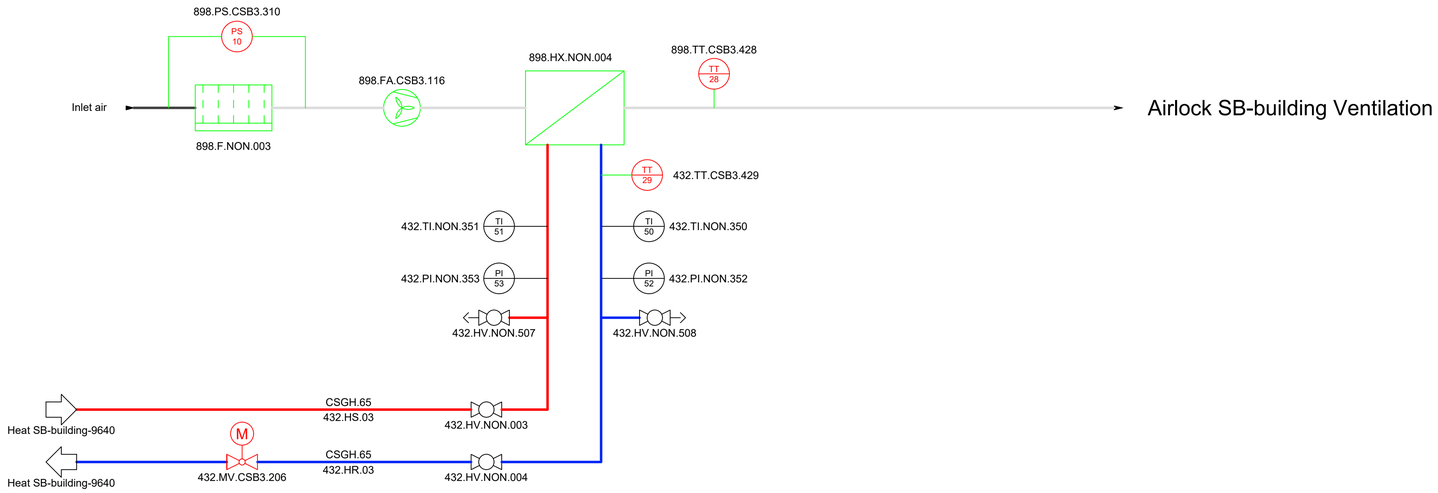


| Rev. Nr.: | Rev. Dato: | Rev. Decription: |
|---|---|---|

Builder: ST1

Project: SLK

Subject: Ventilation SB-building
Rev. 6

Int.: MDC | QC.: CM | APP.: | Date: 15-10-2025

Project nr..: 1768

Drawing nr..:
9657

FORMAT: A1

LUNDSBY RENEWABLE SOLUTIONS
Lundsby Renewable Solutions A/S, Hjarbækvej 65, 8831 Løgstrup
Tlf.: +45 96 49 43 00 Info@lundsby.dk
This Drawing is subject to copywrite and may not be reproduced without permission from Lundsby Renewable Solutions A/S