Structure of the tagging system

Structure of the component tagging

XXX — XXX — XXX — XXX

Main equipment area code | Equipment Valve Instrument abbreviation | Supply from switchboard | Numeric Sequence

Example
552 - TA - NON - 001

- 101
- Switchboard
- Tank
- Area pasteurization tank 2

301.TA.NON.1: where 301 = Digester (System number), TA = Tank (Equipment), NON = Mechanical object (No switchboard), 01 = Tank nr 1.
201.P.CSB2.05: where 201 = Manure/feeding (System number), P = Pump (Equipment), CSB2 = Electrical object (Distribution board), 05 = Pump nr 5.
901.AK.CSB1.03: where 901 = Control and automation (System number), AK = Sub-distribution board at subcontractor (Equipment), CSB1 = Electrical object (Distribution board), 03 = Cabinet nr 3.

System:	System number:	
Reception	**100-199**	
Manure tank		100-109
Fat/Liquid Substrate tank		110-119
Dry Dosificator tank		120-129
FeCl tank		130-139
Glycerol tank		140-149
Cereals silo		160-169
Water tank		170-179
LPG tank		180-189
Beets and root crops		190-191
Feeding in	**200-299**	
Manure feeding		200-209
Fat/Liquid Substrate feeding		210-219
Dry Dosificator		220-229
FeCl feeding		230-239
Glycerol feeding		240-249
Pasteurization before digester		250
Cereal feeding		260
Water feeding		270
Oxygen/air dozing		280
Mixing tank		290
Digester	**300-399**	
Primary Digester		300-309
Secondary Digester		310-319
Tertiary Digester		320-329
Line X		3X0
Heating system	**400-499**	
Heating system		400-449
Cooling system		450-459
Feeding out	**500-599**	
Pump		500 - 509
Pasteurization after digester		550
Biofertilizer tank	**600-699**	
Biofertilizer tank 1		601
Biofertilizer tank 2		602
Separation		610 - 619
Gas treatment	**700-799**	
Components on general gas pipe		700
Condensate pit		710
Flare		720
Upgrading unit/CHP/boiler		730
Stripper air combustion		740
RTO		750
High pressure compressor station		760
LNG plant		770
Propane dosing		780
Support system	**800-899**	
Instrument air		800
Hydraulic system		805
Water		810
Backflow protection system		815
Heat tracing cable		820
Car wash		830
Building/container		840
Pumpwell		850
Oil separator		860
		870
Dosing equipment		880
Odour contro/ventilation system		890
Electrical and Control	**900-999**	
Control and automation		900-949*
Server and IT		950*
Electrical power high voltage (>1000V)		980-989*
Electrical power low voltage		990-999*

Lines

Description	Symbol
Subcontractor scope	
Boundary line	
Page connector	
Start pipe - Not linked to page	
End pipe - Not linked to page	
Fald/ Slope	
Insulation	
Electrical Heat tracing	

Pipe Spec list	Code
Carbon steel P235TR1	CSTR
Carbon steel P235GH	CSGH
Preinsulated Carbon steel P235GH	CSGH-PRI
Stainless steel pipes 1.4304	SS16 / SS16-P
PE100 SDR17	PE17
Preinsulated PE100 SDR17	PE17-PRI
PE100 SDR11	PE11
PE pipes for ventilation	PEVE
PE Drain Pipes	PWW
Electrical Conduit And Piping	ELCP
Ventilation Steel	VENTS
Ventilation Plastic	VENTP
?	Unknown

Bulding/Area/Tank

Description	Code
Primary digester	PD
Secondary digester	SD
Digester storage	DST
Liquid manure tank	LMT
Liquid biomass tank	LBT
Outlet tank	OT
Blackwater tank	BWT
Tech building	TB
Admin building	ADB
Solid biomass building	SBB
Liquid biomass building	LBB
Plansilo	PS
Pump house	PH
Hygienization tanks	HYG
Flare	FLA
Stack	STA
Odour treatment facility	OD
Upgrade facility	UPG
Liquifaction facility	LIQ
Oil boiler	OB
Wood boiler	WB
Transformer	TR

Media code

Media	Pipe color	RBG color	Code
Heat Return		0,37,245	HR
Heat Supply		255,0,0	HS
Heat Hot Return		255,223,127	HHR
Heat Hot Supply		238,129,129	HHS
Cooling Supply		0,255,183	CS
Cooling Return		126,189,189	CR
Black Water		36,39,132	BW
CIP		253,53,223	CIP
Process Water		170,170,255	PW
Technical Water		69,78,104	TW
Drinking Water		0,0,129	DW
Drinking Water Hot		0,127,255	DWH
Condensate		108,163,208	CW
Steam		255,82,82	ST
Steam Condensate		189,0,0	STC
Liquid Manure (Slurry)		240,130,40	LM
Liquid Biomass (Substrat)		128,0,255	LB
Process Biomass		165,103,82	PB
Hygienized Biomass		169,130,0	HB
Recirculated Biomass		165,103,82	RCB
Ferric Chloride FeCl		145,255,71	FeCL
Ventilation Odour Treatment		199,199,199	VOT
Ventilation Fresh Air		199,199,199	VFA
Compressed Air		64,64,64	CA
Oxygen		0,128,255	O2
Raw Biogas		255,255,0	RB
Return/reject Gas		116,118,4	RG
Nature Gas		0,255,127	NG
Instrument Leader		Green	N/A

Structure of the pipeline tagging system

The pipetag consists of various information about the pipe
Full pipeline tag as shown below

Size-PipeSpec-Area-Service (Medie)-Serial number

[100 PE17 201 LM 01]

Example

- 01: Two (2) digits. Starts with 01 [01]
- LM: Two (2) to four (4) characters (letters) [LM - Liquid manure]
- 201: Three (3) digits [201 - Manure feeding in tank 1]
- PE17: Pipe Spec name [PE17 - PE100 SDR17]
- 100: Pipe size DN indication for Metric pipes OD indication for PE-pipe [This example is OD 100 mm]

The pipe tag will be shown on the P&ID as follows: PipeSpec-Size / Area-Service-Serialnumber

Example of line tag notation on P&ID: PE17-110 / 201-LM-01

Line color corresponding to table above.
The part below the pipeline is the Unique Line Tag.
Unique Line Tag is generated automatically when creating complete Line Tag.
Unique Line Tag is used by the P3D system when designing pipes in the 3D model and when generating Isometrics.

Rev. Nr.:	Rev. Dato:	Rev. Decription:

Builder: ST1
Project: SLK
Subject: PID Legend
Rev. 6
Int.: MDC | QC.: CM | APP.: | Date: 15-10-2025

Project nr..: 1768
Drawing nr..:
PID Legend

LUNDSBY RENEWABLE SOLUTIONS
Lundsby Renewable Solutions A/S, Hjarbækvej 65, 8831 Løgstrup
Tlf.: +45 96 49 43 00 Info@lundsby.dk
This Drawing is subject to copywrite and may not be reproduced without permission from Lundsby Renewable Solutions A/S

FORMAT: A1

Valves

Hand valves

Symbols	Code	Description
	HV	General valve
	HV	Ball valve
	HV	Butterfly valve
	HV	Globe valve
	HV	Three way valve
	HV	Ground covered valve
	BV	Balancing valve

Actuated valves / Regulating valves

M	MV/RV	Motor ball valve
M	MV/RV	Motor butterfly valve
	AV/RV	Pneumatic ball valve
	AV/RV	Pneumatic valve
	AV	Solenoid valve

Safety valves

	SV	Exhaust valve covers
	SV	Safety valve
	SV	Breather valve

Mechanical valves

	PV	Pressure holding valve
	CV	Check valve
	VV	Venting valve

Miscellaneous additional valve symbols

		Operator lock mechanism

Equipment

Pumps / Compressors / Blowers

Symbols	Code	Description
	P	Pump (General)
	P	Positive displacement pump
	P	Helical rotor pump
	P	Centrifugal pump
	P	Peristaltic pump
	MC	Rotacut
	MC	Shredder
	FA	Blower
	CO	General compressor

Heating and Cooling

	HX	Heat exchanger - Shell & tube
	HX	Heat exchanger - plate
	HX	Heat exchanger - double pipe
	HX	Heating coil (in tank)
Heatpump	HS	Heatpump

Tank equipment

	AG	ISO Agitator - Propeller
	AG	Agitator
	LA	Light
	CA	Camera
	FH	Foam hatch

Filters and Vessels

	AT	General filter / Forfilter
	AT	General liquid
	AT	Drier - General
	F	Suction hood
EXP	EXP	Expansion tank

Equipment

Symbols	Code	Description
	MX	Bio mixer
	MC	Premix
	CV	Debris lift unit
	CV	Screw conveyor
	CV	Belt conveyor
	CRA	Crane
	CH	ISO Stack - Chimney
	FL	Flare
	PD	Pulsation damper
	SP	Screw press

Tanks

	DT	Digester tank
	ST	Storage tank
	DT/ST	Storage tank with cover
	HT	Gas/Hyginisation tank
	TA	Buried tank

Piping

Piping symbols

Symbols	Code	Description
	N/A	Offpage connector
	N/A	Flange connection
	N/A	Blind flange
	NO	Truck nozzle
	NO	Funnel/Drain
	AS	Expansion joint
	SN	Strainer
	N/A	Going into the ground / Coming up from
	AJ	Concentric reducer
	AJ	Eccentric reducer
	AX	Sample point
	BS	Inline silencer
	BU	Electrical heat tracing
	N/A	Going though wall

Category	Numbers
Manual valves	001-099
Manual regulation valves	101-199
Pneumatic, electrical, solenoid	201-299
-	301-399
Check, Non-return valves	401-499
Drain, venting valves	501-599
Self-regulating valves (thermal/l	601-699
Instrument valves	701-799
-	801-899
Safety valves	901-999

Revision clouds

Instruments

Description

Instruments will be tagged

XXX - XX - XXX - XXX
Main area code / Letter code / Switchboard / Numeric sequence

XX First letter
XX Succeeding letter
XX Numeric sequence

Description	Example
Field instrument	TI 01 — Temperature indication 01
Instrument with connection to control	LS 02 — Level switch 02

Instruments with succeeding letter T is an analog signal.
Instruments with succeeding letter S is a digital signal.

Instruments	Abbreviation
Analyze Indicator	AI
Analyse Transmitter	AT
Energi Transmitter	ET
Flow Indicator	FI
Flow Transmitter	FT
Flow Switch	FS
Flow Transmitter	FT
General Switch	GS
Level Switch	LS
Level Indicator	LI
Level Transmitter	LT
Pressure Indicator	PI
Pressure Switch	PS
Pressure Transmitter	PT
Thermometer	TI
Temperature Transmitter	TT
Weight Transmitter	WT

Various instruments

	FT	Flow transmitter
	EM	Energy meter
	SI	Siren
M	M	Electric motor
AK	AK	Units with own switchboard
	K	Control box

Rev. Nr.:	Rev. Dato:	Rev. Beskrivelse:

Builder: ST1
Project: SLK
Subject: PID legend 2
Rev. 6
Int.:MDC | QC: CM | APP.: | Date: 15-10-2025

Project nr.: 1768
Drawing nr.:
PID legend 2

LUNDSBY RENEWABLE SOLUTIONS
Lundsby Biogas A/S, Hjarbækvej 65, 8831 Løgstrup
Tlf.: +45 96 49 43 00 Info@lundsbybiogas.dk
Denne tegning er underlagt copyvrite op må ikke reproduceres uden tilladelse fra Lundsbybiogas A/S

FORMAT: A1

Revision Overview

Rev. nr.	PID nr.	Description	Rev. nr.	PID nr.	Description
6	9601	Drain valve added on slurry pipe	6	9633	Gas pipe from HYG tanks added
6	9602	Gas safety valve design changed	6	9634	Pipe size changed & flow meter added for boiler
6	9603	Gas safety valve design changed	6	9635	Wärtsillä connection changed
6	9604	Manifold design changed	6	9637	Oil tank & pump added
6	9611	Pump cabinet design changed	6	9638	Calorify design changed
6	9613	Gas safety valve design changed	6	9641	Calorify design changed
6	9614	Gas safety valve design changed	6	9648	Valve changed on water pipe
6	9618	Bypass with valves added	6	9652	Compressed air & oxygen design changed
6	9616	Gas safety valve design changed			
6	9617	Gas safety valve design changed			
6	9619	Gas safety valve design changed			
6	9629	Gas safety valve design changed			
6	9630	Gas safety valve design changed			
6	9632	truck nozzles added			

Rev. Nr.:	Rev. Date:	Rev. Decription:

Builder: ST1
Project: SLK
Subject: Revision overview
Rev. 6
Int.: MDC | QC.: CM | APP.: | Date: 15-10-2025

LUNDSBY RENEWABLE SOLUTIONS
Lundsby Renewable Solutions A/S, Hjarbækvej 65, 8831 Løgstrup
Tlf.: +45 96 49 43 00 Info@lundsby.dk
This Drawing is subject to copywrite and may not be reproduced without permission from Lundsby Renewable Solutions A/S

Project nr..: 1768
Drawing nr..:
Rev. overview
FORMAT: A1

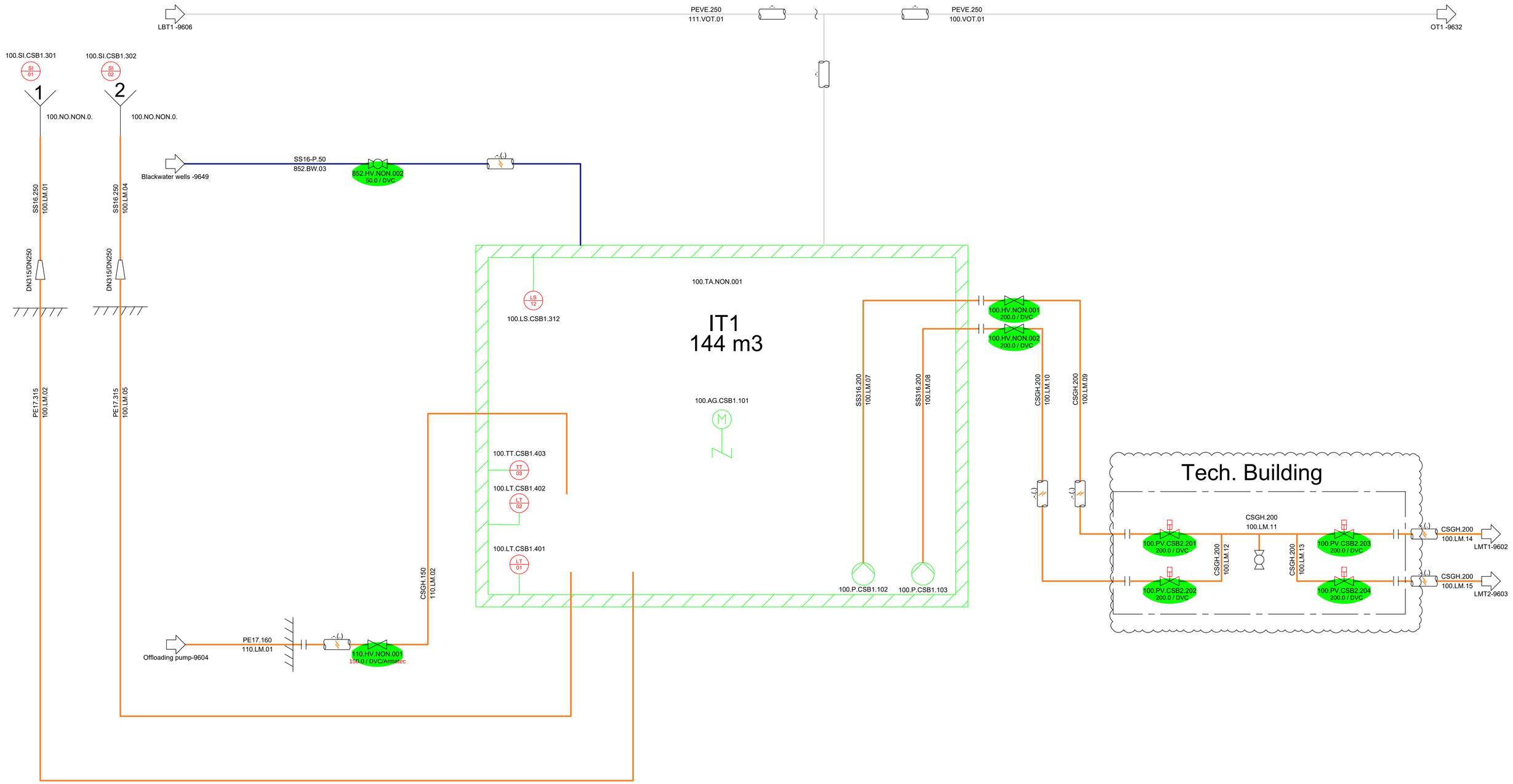

Rev. Nr.:	Rev. Dato:	Rev. Decription:

Builder: ST1

Project: SLK

Subject: Inlet tank 1
Rev. 6

Int.: MDC | QC.CM | APP.: | Date: 15-10-2025

Project nr..1768

Drawing nr..:
9601

FORMAT: A1

LUNDSBY RENEWABLE SOLUTIONS

Lundsby Renewable Solutions A/S, Hjarbækvej 65, 8831 Løgstrup
Tlf.: +45 96 49 43 00 Info@lundsby.dk
This Drawing is subject to copywrite and may not be reproduced without permission from Lundsby Renewable Solutions A/S

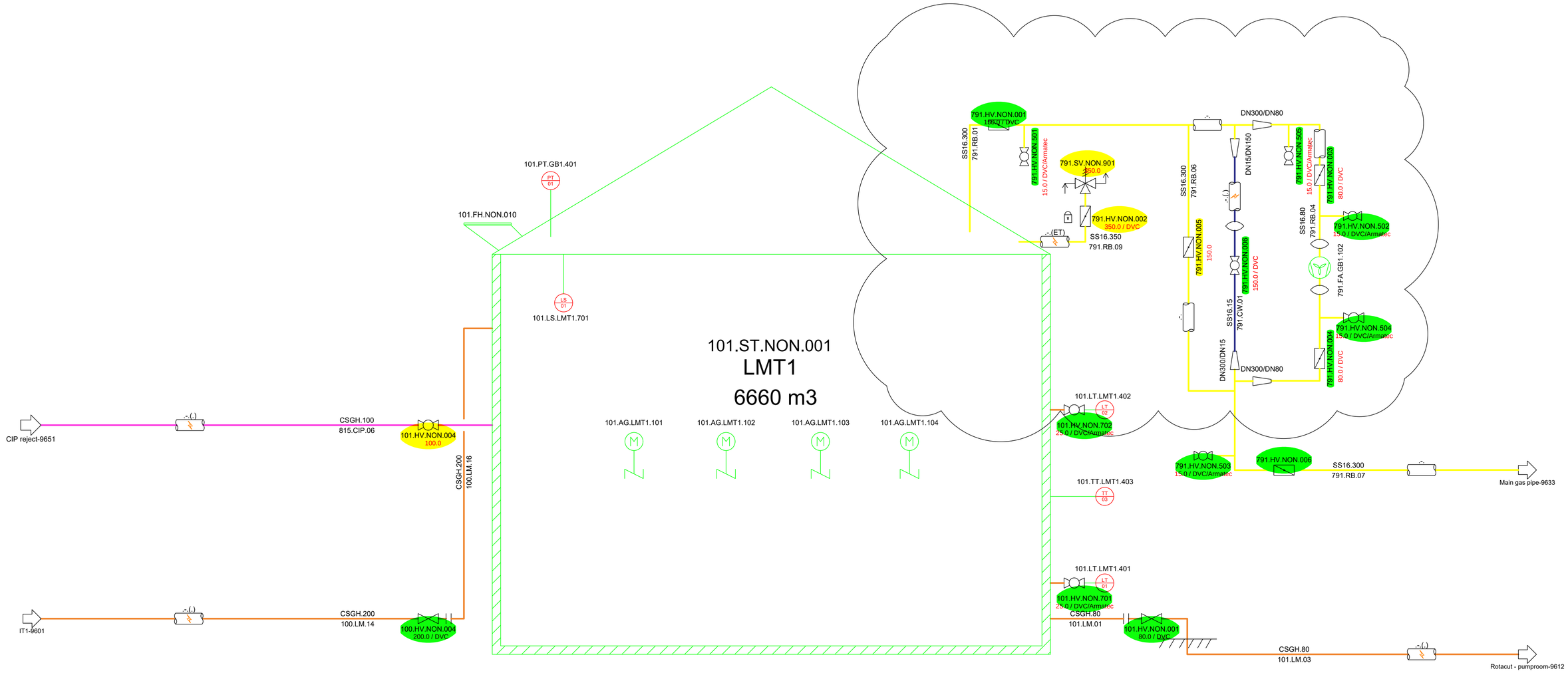

Rev. Nr.:	Rev. Dato:	Rev. Decription:

Builder:	ST1		
Project:	SLK		Project nr..1768
Subject:	Liquid Manure Tank 1 Rev. 6		Drawing nr..: 9602
Int.: MDC	QC.CM	APP.:	Date: 15-10-2025

LUNDSBY RENEWABLE SOLUTIONS

Lundsby Renewable Solutions A/S, Hjarbækvej 65, 8831 Løgstrup
Tlf.: +45 96 49 43 00 Info@lundsby.dk
This Drawing is subject to copywrite and may not be reproduced without permission from Lundsby Renewable Solutions A/S

FORMAT: A1

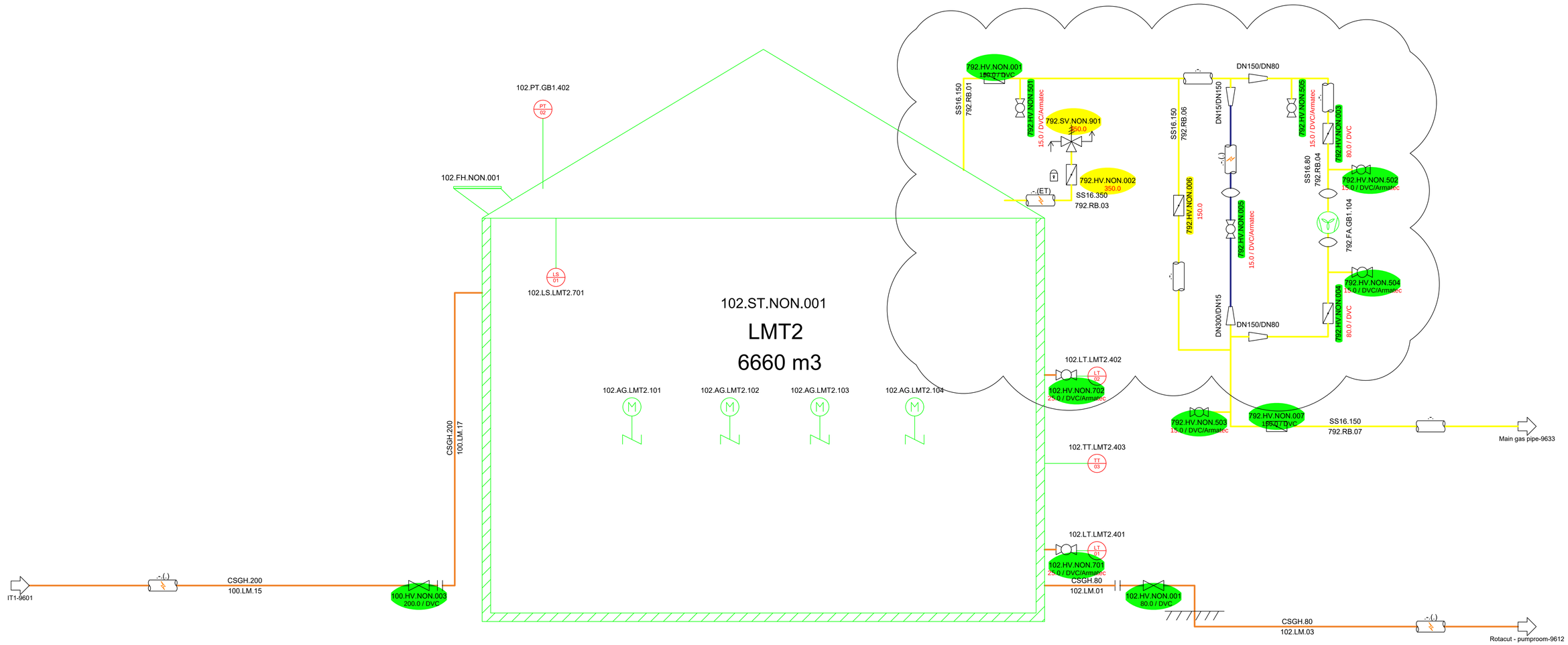

Rev. Nr.:	Rev. Dato:	Rev. Decription:

Builder:	ST1		
Project:	SLK		Project nr..1768
Subject:	Liquid Manure Tank 2 Rev. 6		Drawing nr..: 9603
Int.: MDC	QC.CM	APP.:	Date: 15-10-2025

LUNDSBY RENEWABLE SOLUTIONS

Lundsby Renewable Solutions A/S, Hjarbækvej 65, 8831 Løgstrup
Tlf.: +45 96 49 43 00 Info@lundsby.dk
This Drawing is subject to copywrite and may not be reproduced without permission from Lundsby Renewable Solutions A/S

FORMAT: A1

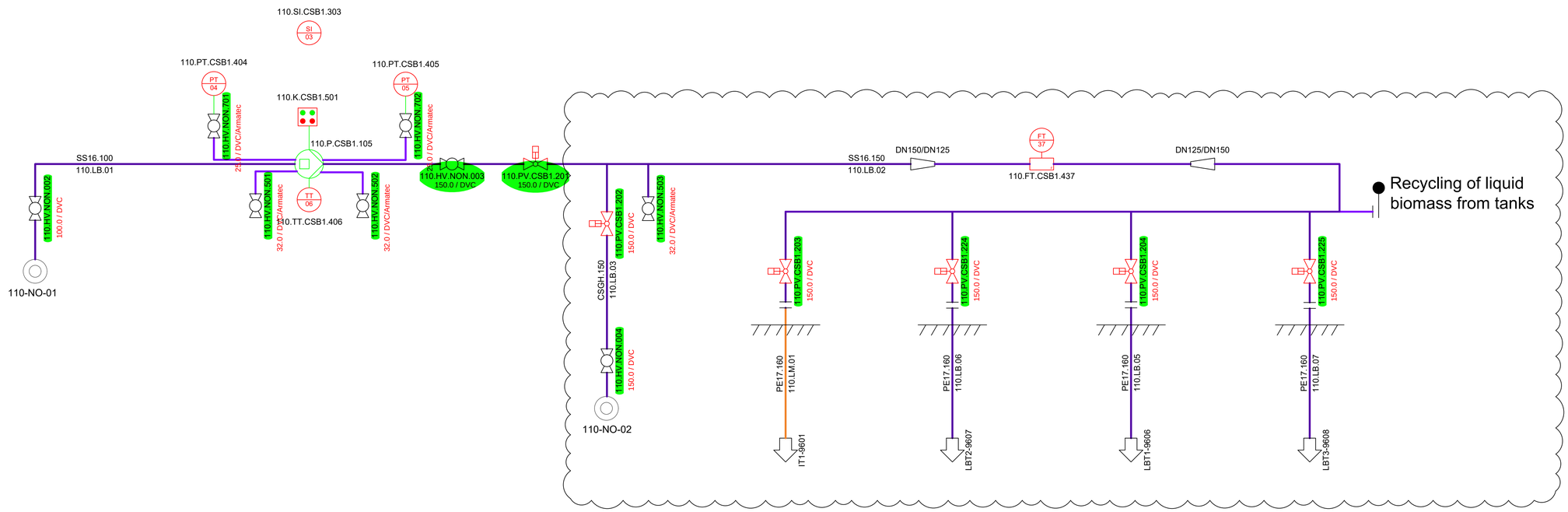

Rev. Nr.:	Rev. Dato:	Rev. Decription:

Builder: ST1

Project: SLK

Subject: Liquid biomass delivery pump
Rev. 6

Int.: MDC | QC.ĊM | APP.: | Date: 15-10-2025

Project nr..: 1768

Drawing nr..: 9604

LUNDSBY RENEWABLE SOLUTIONS
Lundsby Renewable Solutions A/S, Hjarbækvej 65, 8831 Løgstrup
Tlf.: +45 96 49 43 00 Info@lundsby.dk
This Drawing is subject to copywrite and may not be reproduced without permission from Lundsby Renewable Solutions A/S

FORMAT: A1

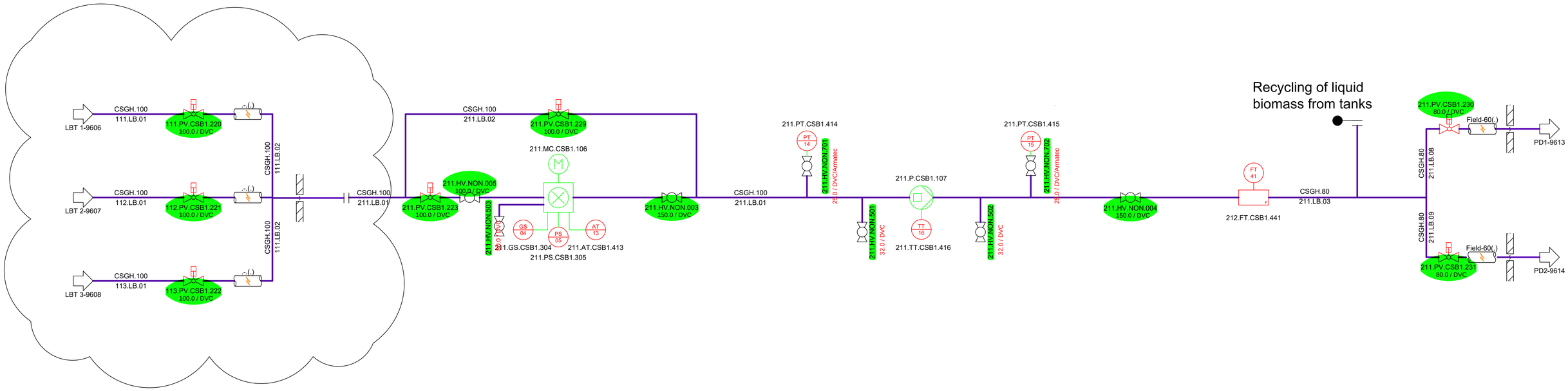

Rev. Nr.:	Rev. Dato:	Rev. Decription:

Builder: ST1

Project: SLK

Subject: Liquid biomass pump 1
Rev. 6

Int.: MDC | QC.CM | APP.: | Date: 15-10-2025

Project nr..: 1768

Drawing nr..: 9605

FORMAT: A1

LUNDSBY RENEWABLE SOLUTIONS
Lundsby Renewable Solutions A/S, Hjarbækvej 65, 8831 Løgstrup
Tlf.: +45 96 49 43 00 Info@lundsby.dk
This Drawing is subject to copywrite and may not be reproduced without permission from Lundsby Renewable Solutions A/S

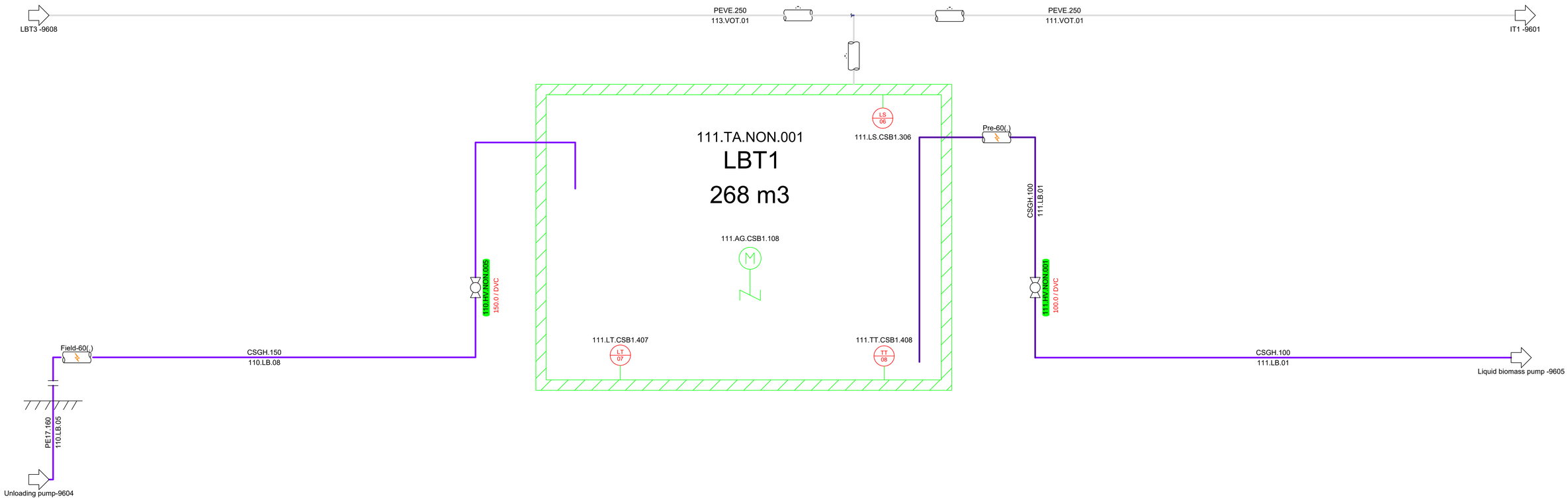

Rev. Nr.:	Rev. Dato:	Rev. Decription:

Builder: ST1

Project: SLK

Subject: Liquid biomass tank 1
Rev. 6

Int.: MDC | QC: CM | APP.: | Date: 15-10-2025

Project nr..: 1768

Drawing nr..:
9606

FORMAT: A1

LUNDSBY RENEWABLE SOLUTIONS
Lundsby Renewable Solutions A/S, Hjarbækvej 65, 8831 Løgstrup
Tlf.: +45 96 49 43 00 Info@lundsby.dk
This Drawing is subject to copywrite and may not be reproduced without permission from Lundsby Renewable Solutions A/S

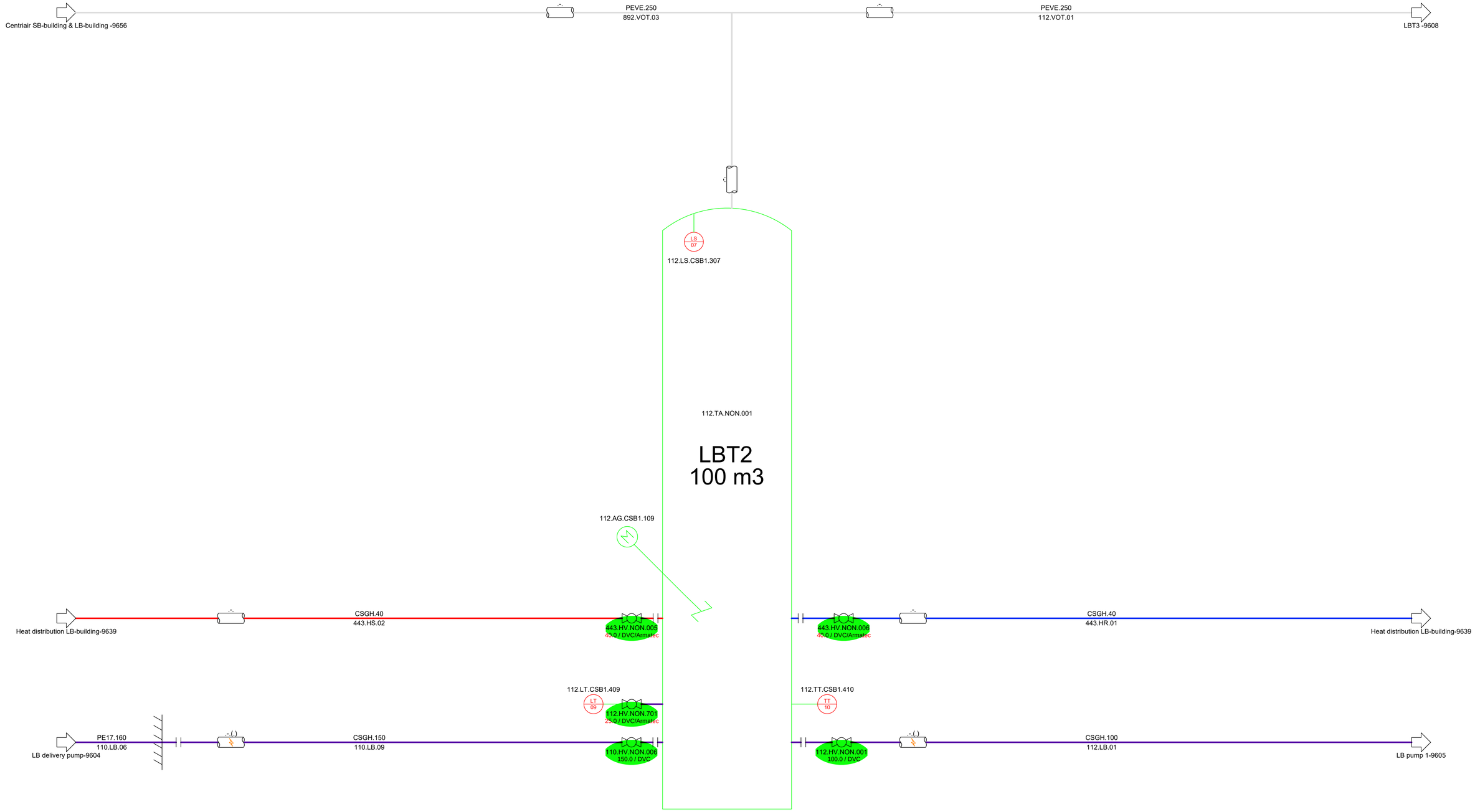

Rev. Nr.:	Rev. Dato:	Rev. Decription:

Builder: ST1

Project: SLK

Subject: Liquid biomass tank 2
Rev. 6

Int.: MDC | QC.CM | APP.: | Date: 15-10-2025

Project nr..1768

Drawing nr..:
9607

LUNDSBY RENEWABLE SOLUTIONS

Lundsby Renewable Solutions A/S, Hjarbækvej 65, 8831 Løgstrup
Tlf.: +45 96 49 43 00 Info@lundsby.dk
This Drawing is subject to copywrite and may not be reproduced without permission from Lundsby Renewable Solutions A/S

FORMAT: A1

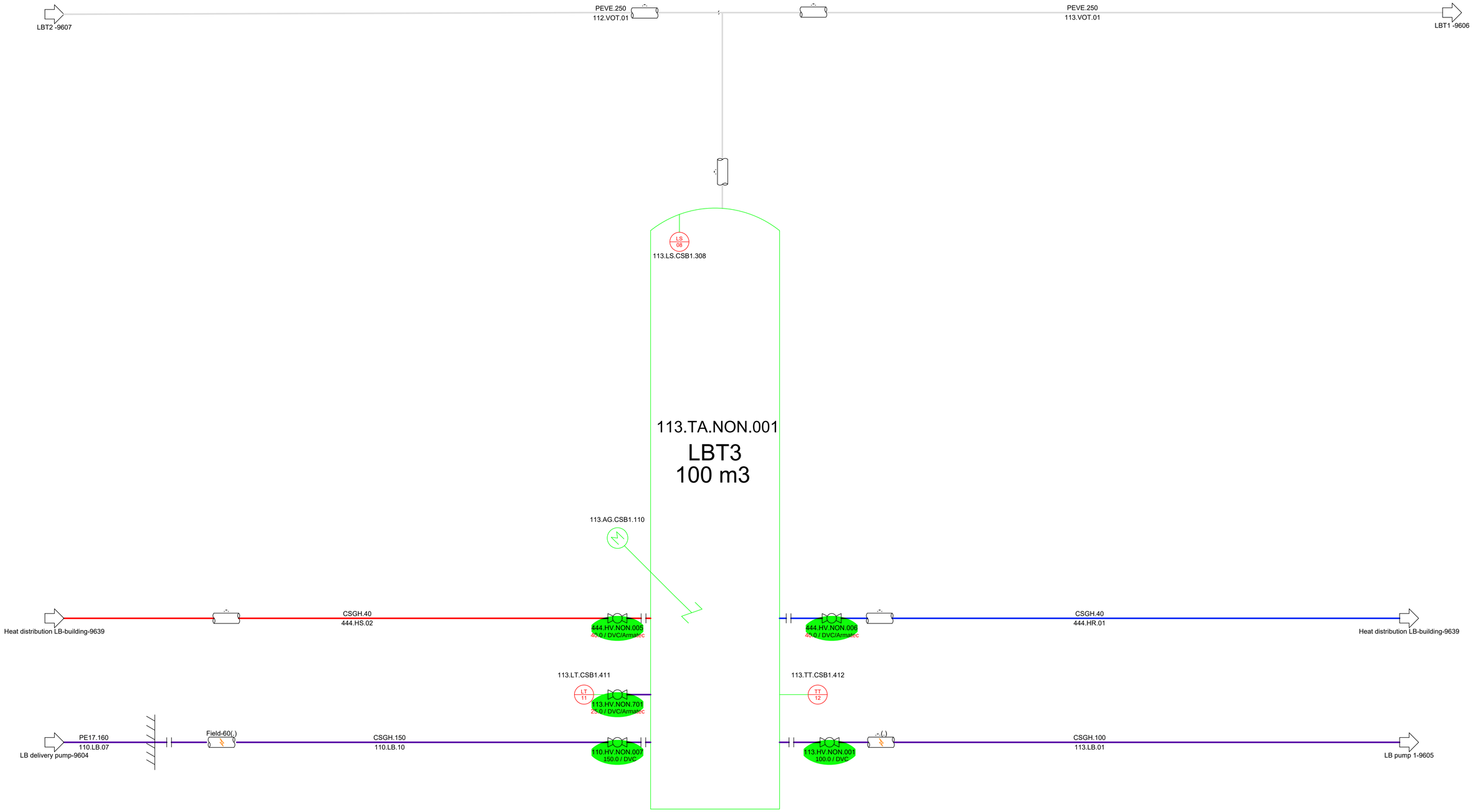

Rev. Nr.:	Rev. Dato:	Rev. Decription:

Builder: ST1

Project: SLK

Subject: Liquid biomass tank 3
Rev. 5

Int.: MDC | QC.CM | APP.: | Date: 01-10-2025

Project nr..:1768

Drawing nr..:
9608

FORMAT: A1

LUNDSBY RENEWABLE SOLUTIONS
Lundsby Renewable Solutions A/S, Hjarbækvej 65, 8831 Løgstrup
Tlf.: +45 96 49 43 00 Info@lundsby.dk
This Drawing is subject to copywrite and may not be reproduced without permission from Lundsby Renewable Solutions A/S

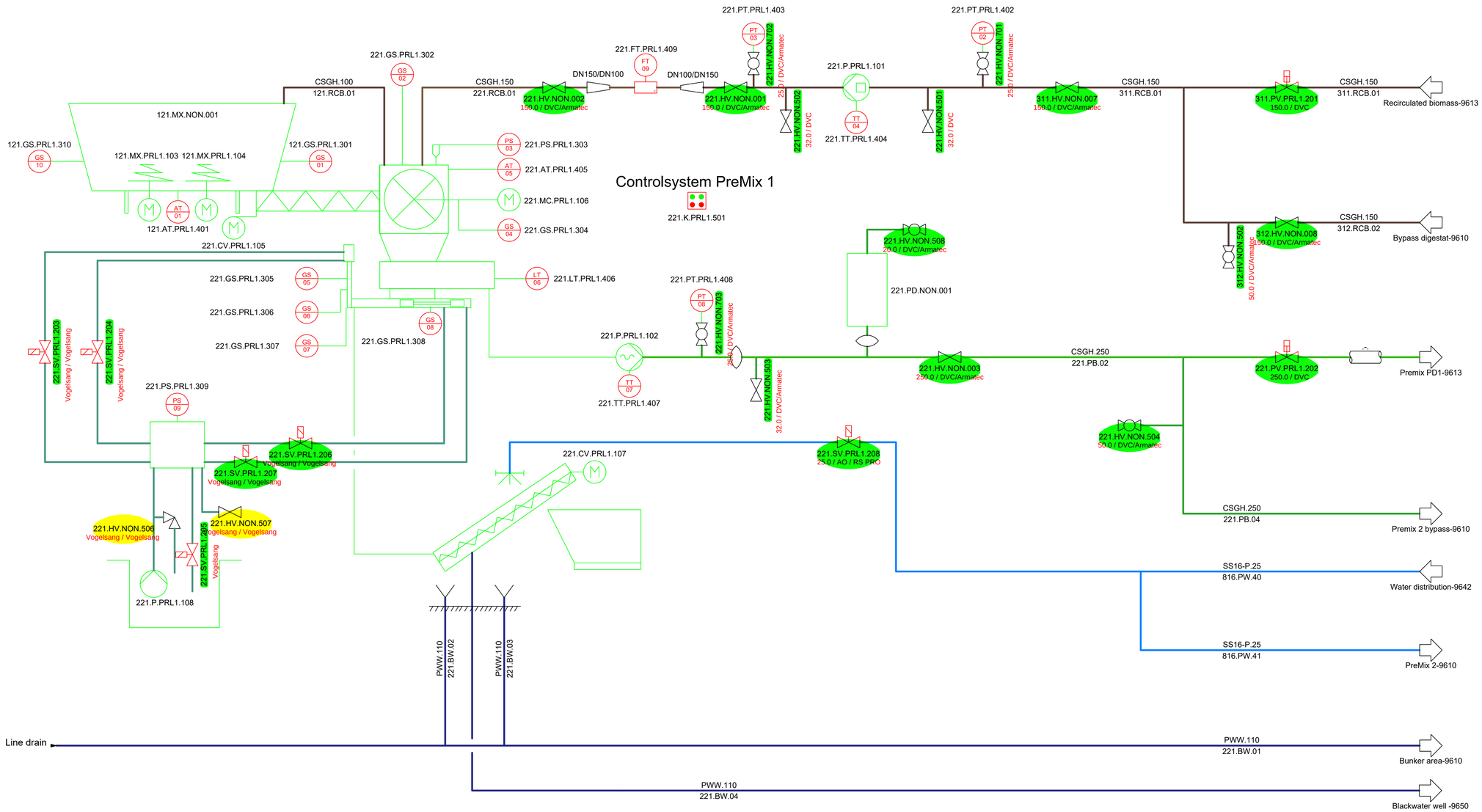

Rev. Nr.:	Rev. Dato:	Rev. Decription:

Builder:	ST1		
Project:	SLK		Project nr..:1768
Subject:	Premix 1 Rev. 6		Drawing nr..: 9609
Int.: MDC	QC.CM	APP.:	Date: 15-10-2025

LUNDSBY RENEWABLE SOLUTIONS

Lundsby Renewable Solutions A/S, Hjarbækvej 65, 8831 Løgstrup
Tlf.: +45 96 49 43 00 Info@lundsby.dk
This Drawing is subject to copywrite and may not be reproduced without permission from Lundsby Renewable Solutions A/S

FORMAT: A1

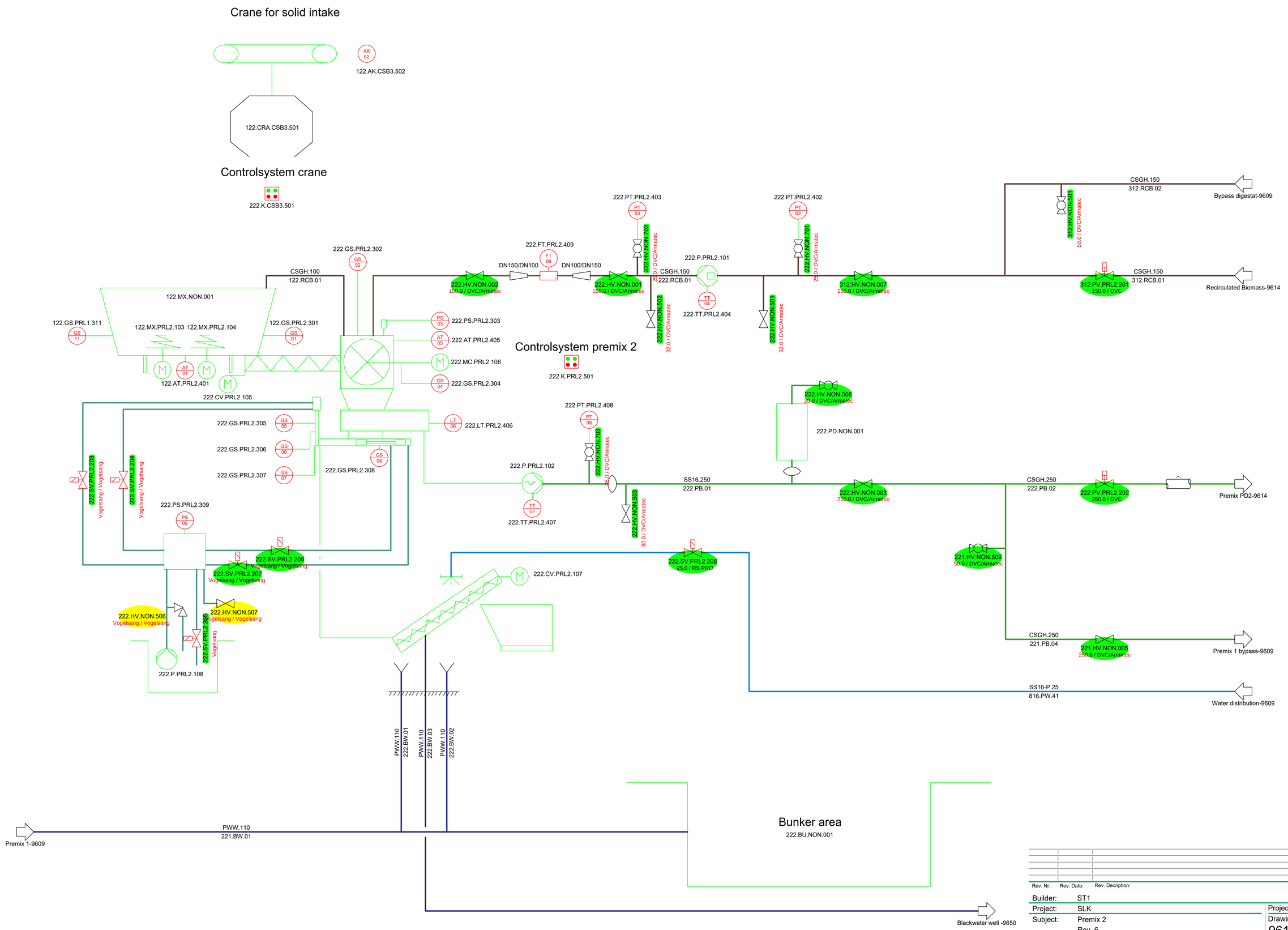

Rev. Nr.:	Rev. Dato:	Rev. Decription:

Builder:	ST1		
Project:	SLK		Project nr..1768
Subject:	Premix 2 Rev. 6		Drawing nr..: 9610
Int.: MDC	QC.CM	APP.:	Date: 15-10-2025

LUNDSBY RENEWABLE SOLUTIONS

Lundsby Renewable Solutions A/S, Hjarbækvej 65, 8831 Løgstrup
Tlf.: +45 96 49 43 00 Info@lundsby.dk
This Drawing is subject to copywrite and may not be reproduced without permission from Lundsby Renewable Solutions A/S

FORMAT: A1

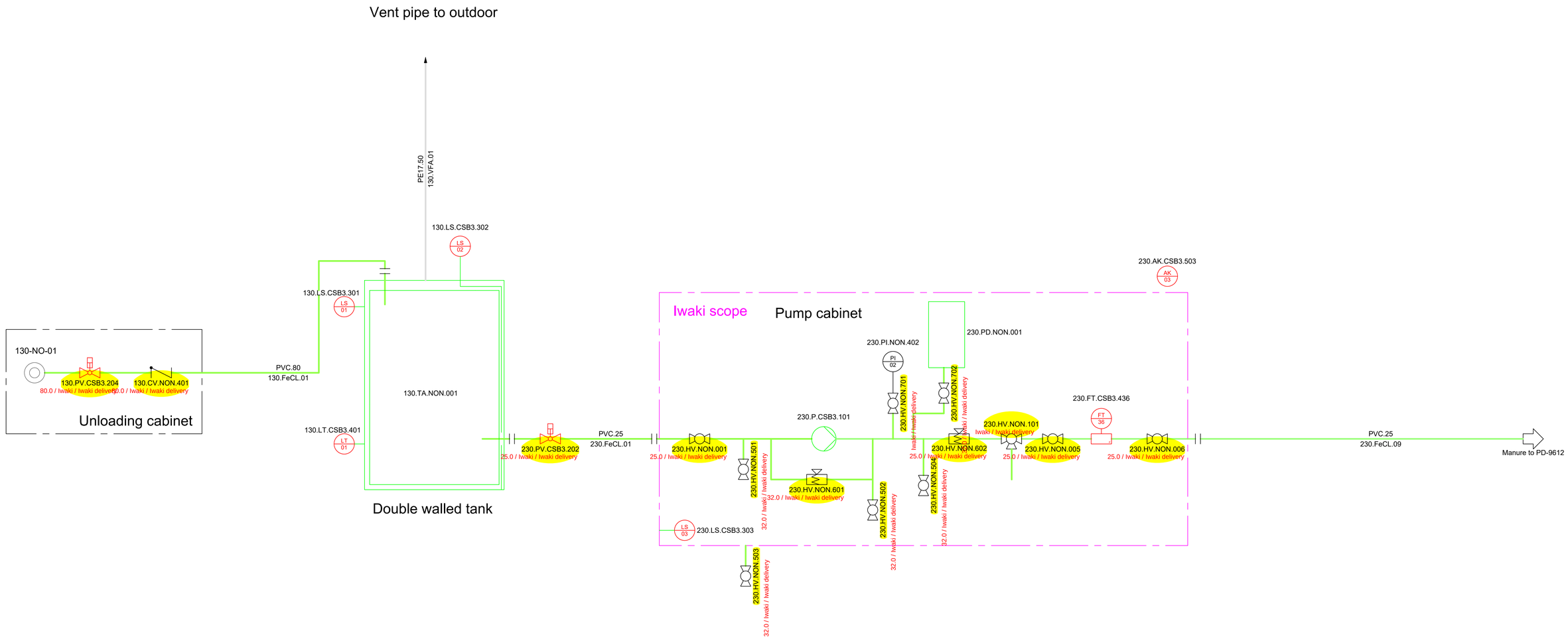

Rev. Nr.:	Rev. Dato:	Rev. Decription:

Builder:	ST1		
Project:	SLK		Project nr..1768
Subject:	FECL system Rev. 6		Drawing nr..: 9611
Int.: MDC	QC.CM	APP.:	Date: 15-10-2025

LUNDSBY RENEWABLE SOLUTIONS
Lundsby Renewable Solutions A/S, Hjarbækvej 65, 8831 Løgstrup
Tlf.: +45 96 49 43 00 Info@lundsby.dk
This Drawing is subject to copywrite and may not be reproduced without permission from Lundsby Renewable Solutions A/S

FORMAT: A1

Pumphouse 2

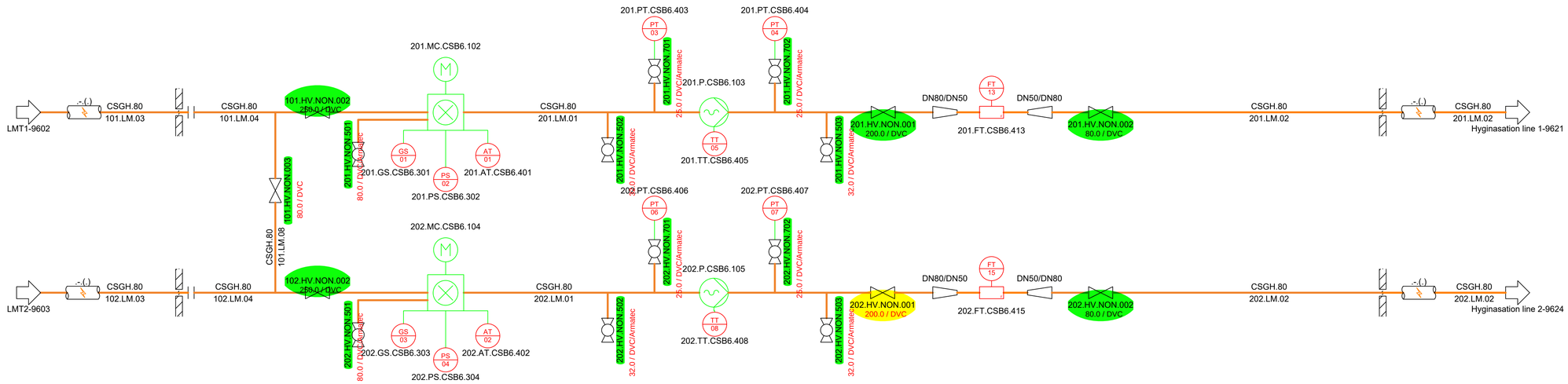

Tech building

SB-building

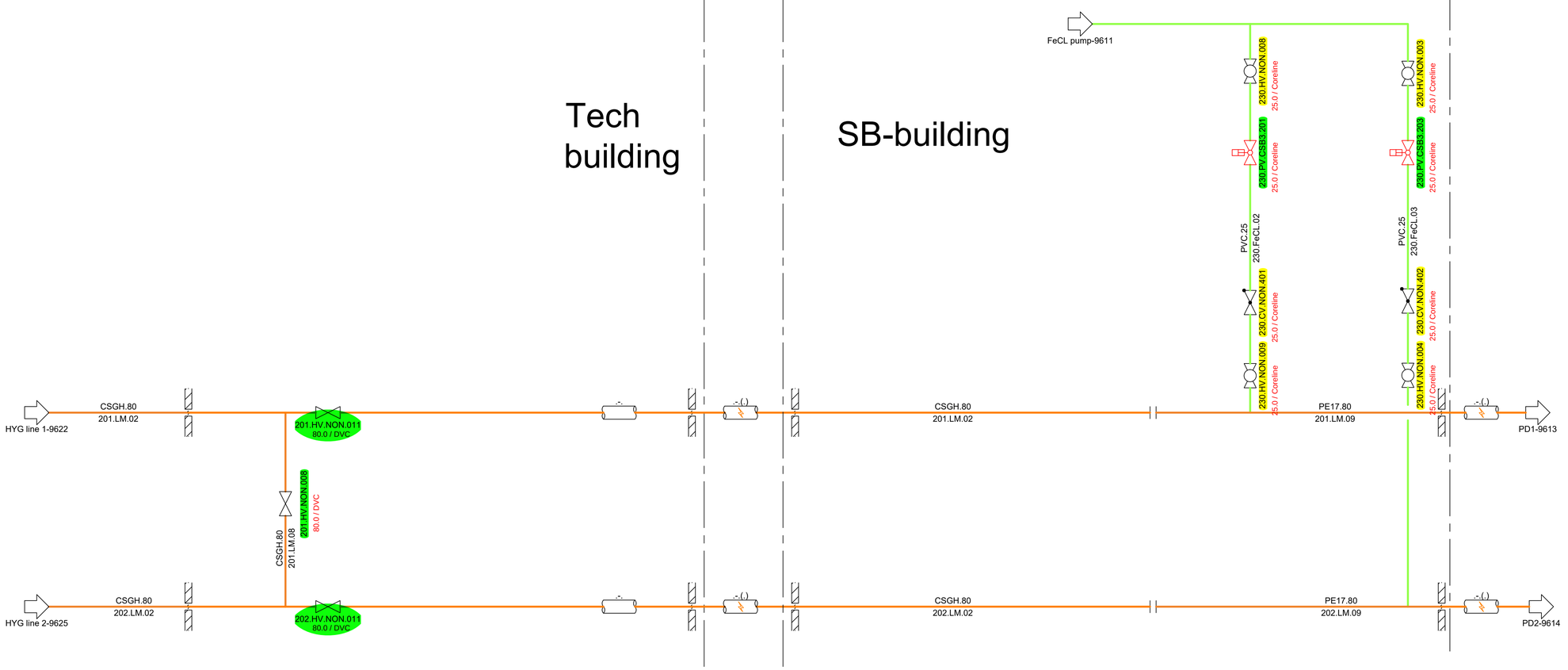

Rev. Nr.:	Rev. Dato:	Rev. Decription:

Builder:	ST1		
Project:	SLK		Project nr..:1768
Subject:	Liquid manure pump Rev. 6		Drawing nr..: 9612
Int.:MDC	QC.CM	APP.:	Date: 15-10-2025

LUNDSBY RENEWABLE SOLUTIONS
Lundsby Renewable Solutions A/S, Hjarbækvej 65, 8831 Løgstrup
Tlf.: +45 96 49 43 00 Info@lundsby.dk
This Drawing is subject to copywrite and may not be reproduced without permission from Lundsby Renewable Solutions A/S

FORMAT: A1

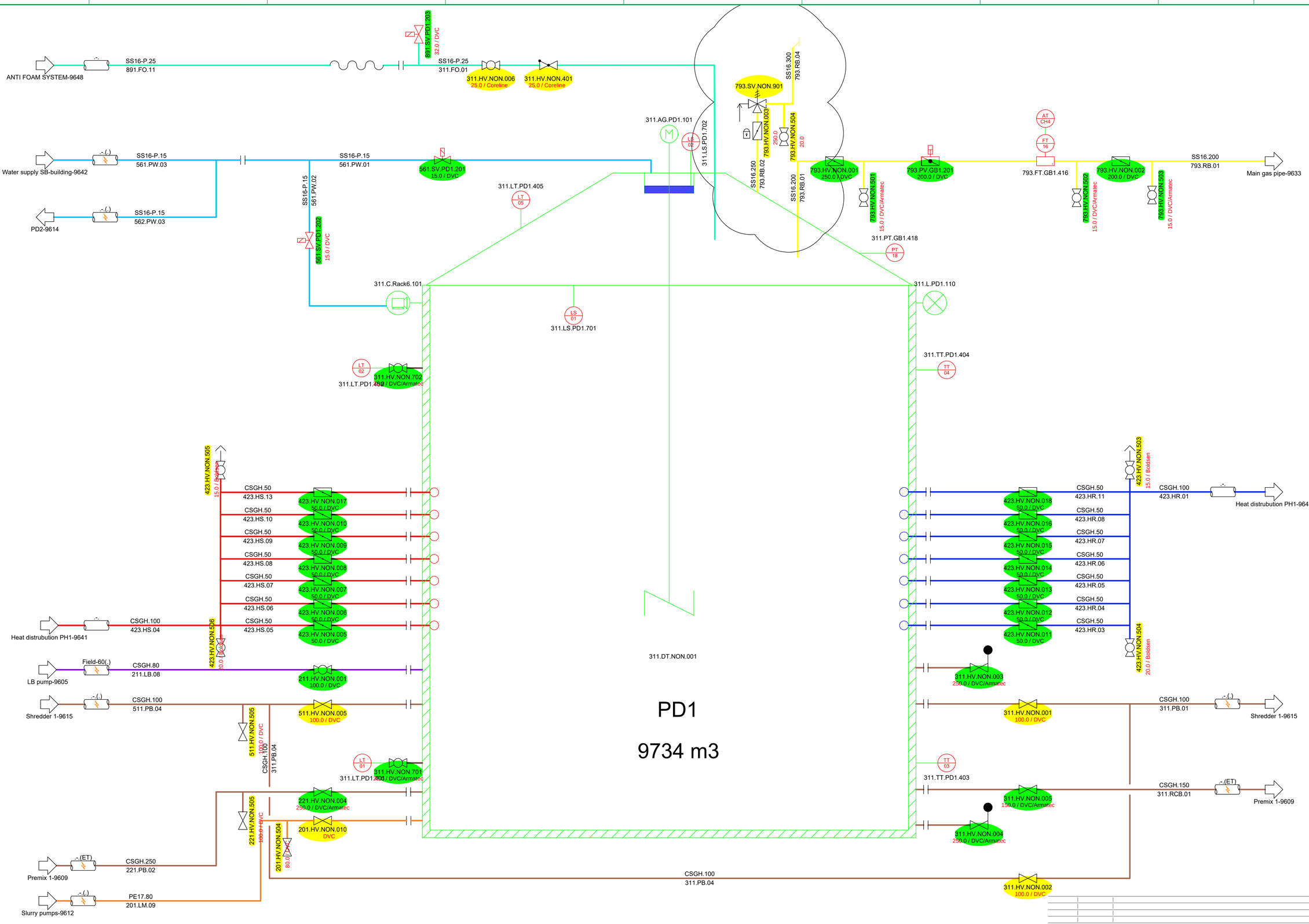

Rev. Nr.:	Rev. Dato:	Rev. Decription:

Builder:	ST1		
Project:	SLK		
Subject:	Primary digester 1 Rev. 6		
Int.: MDC	QC: CM	APP.:	Date: 15-10-2025

Project nr..1768

Drawing nr..:
9613

FORMAT: A1

LUNDSBY RENEWABLE SOLUTIONS

Lundsby Renewable Solutions A/S, Hjarbækvej 65, 8831 Løgstrup
Tlf.: +45 96 49 43 00 Info@lundsby.dk
This Drawing is subject to copywrite and may not be reproduced without permission from Lundsby Renewable Solutions A/S

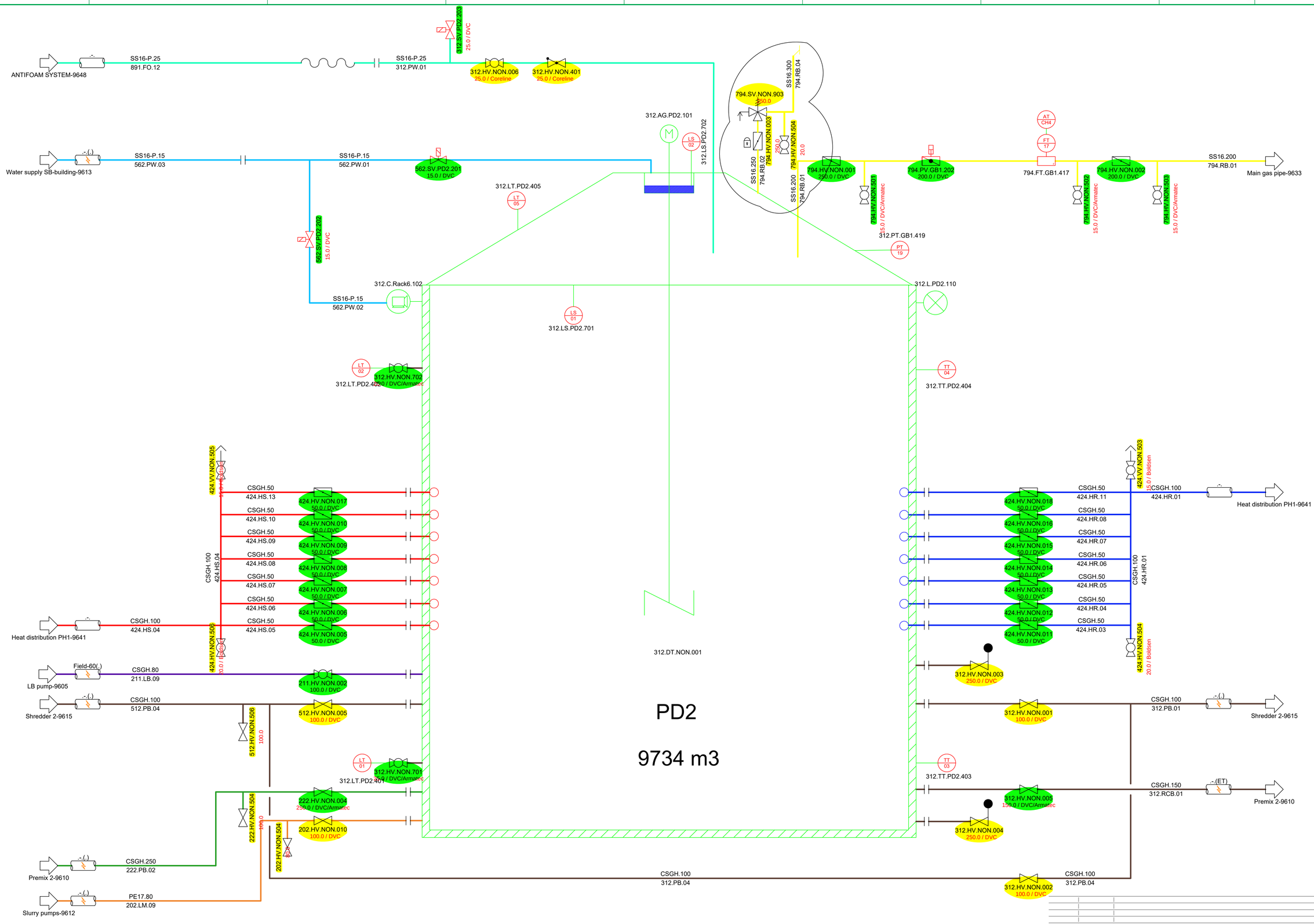

Rev. Nr.:	Rev. Dato:	Rev. Decription:

Builder:	ST1		
Project:	SLK		Project nr..1768
Subject:	Primary digester 2 Rev. 6		Drawing nr..: 9614
Int.: MDC	QC: CM	APP.:	Date: 15-10-2025

LUNDSBY RENEWABLE SOLUTIONS

Lundsby Renewable Solutions A/S, Hjarbækvej 65, 8831 Løgstrup
Tlf.: +45 96 49 43 00 Info@lundsby.dk
This Drawing is subject to copywrite and may not be reproduced without permission from Lundsby Renewable Solutions A/S

FORMAT: A1

Pumphouse 1

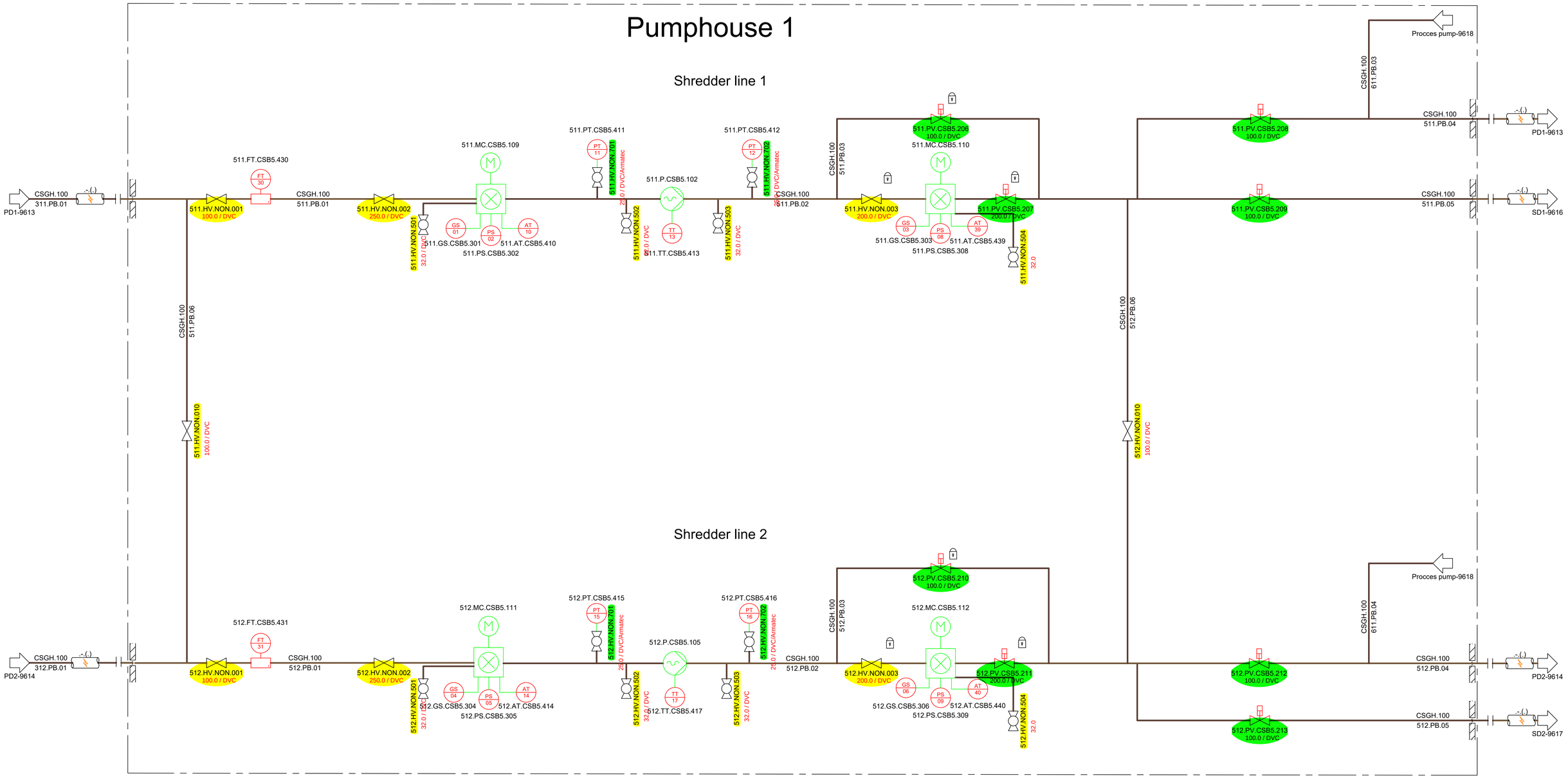

Rev. Nr.:	Rev. Dato:	Rev. Decription:

Builder:	ST1		
Project:	SLK		
Subject:	Shredder line 1&2 Rev. 6		
Int.: MDC	QC: CM	APP.:	Date: 15-10-2025

Project nr..1768

Drawing nr..:
9615

LUNDSBY RENEWABLE SOLUTIONS
Lundsby Renewable Solutions A/S, Hjarbækvej 65, 8831 Løgstrup
Tlf.: +45 96 49 43 00 Info@lundsby.dk
This Drawing is subject to copywrite and may not be reproduced without permission from Lundsby Renewable Solutions A/S

FORMAT: A1

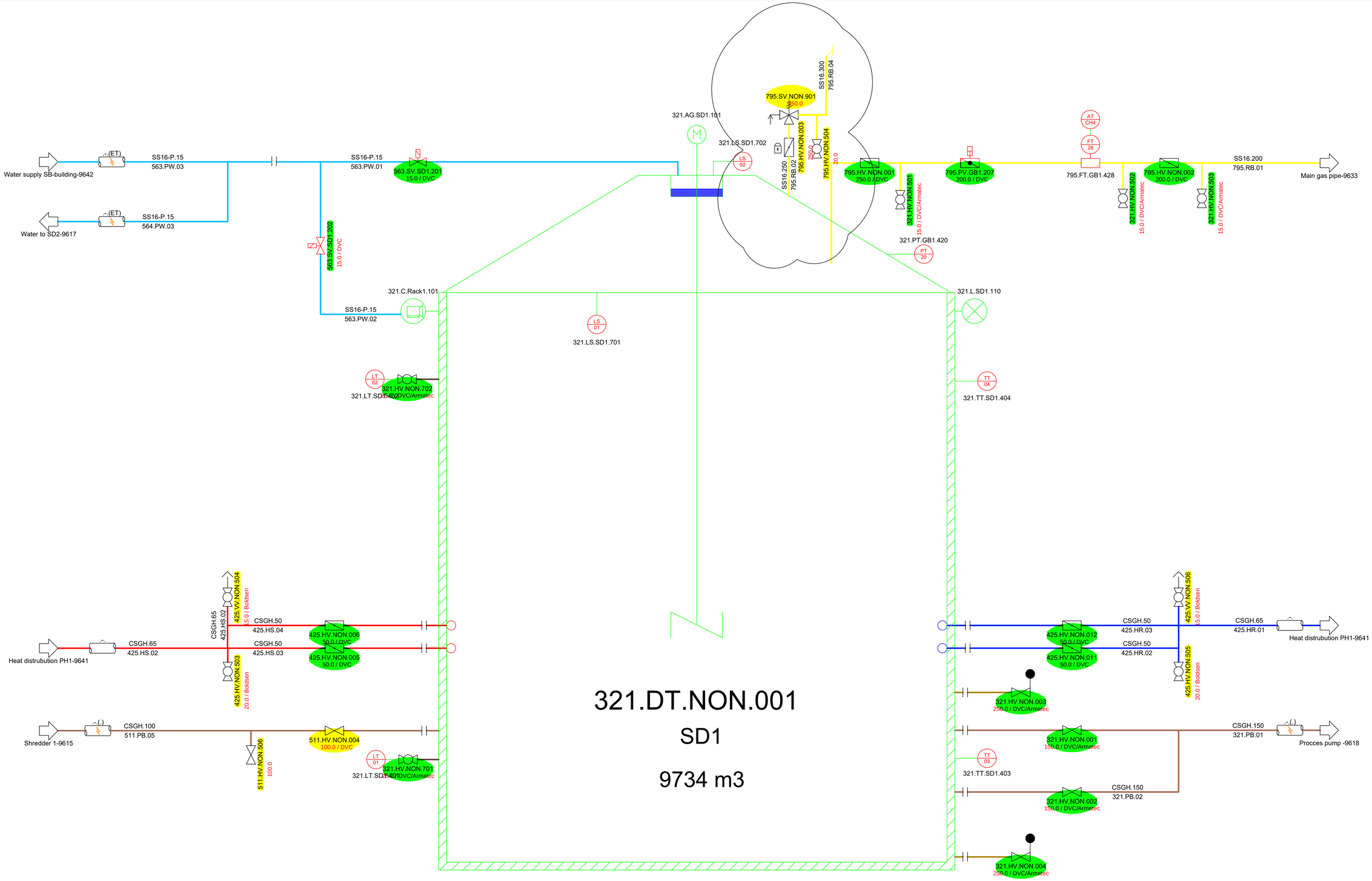

Rev. Nr.:	Rev. Dato:	Rev. Decription:

Builder:	ST1		
Project:	SLK		Project nr..1768
Subject:	Secondary digester 1 Rev. 6		Drawing nr..: 9616
Int.: MDC	QC: CM	APP.:	Date: 15-10-2025

LUNDSBY RENEWABLE SOLUTIONS

Lundsby Renewable Solutions A/S, Hjarbækvej 65, 8831 Løgstrup
Tlf.: +45 96 49 43 00 Info@lundsby.dk
This Drawing is subject to copywrite and may not be reproduced without permission from Lundsby Renewable Solutions A/S

FORMAT: A1

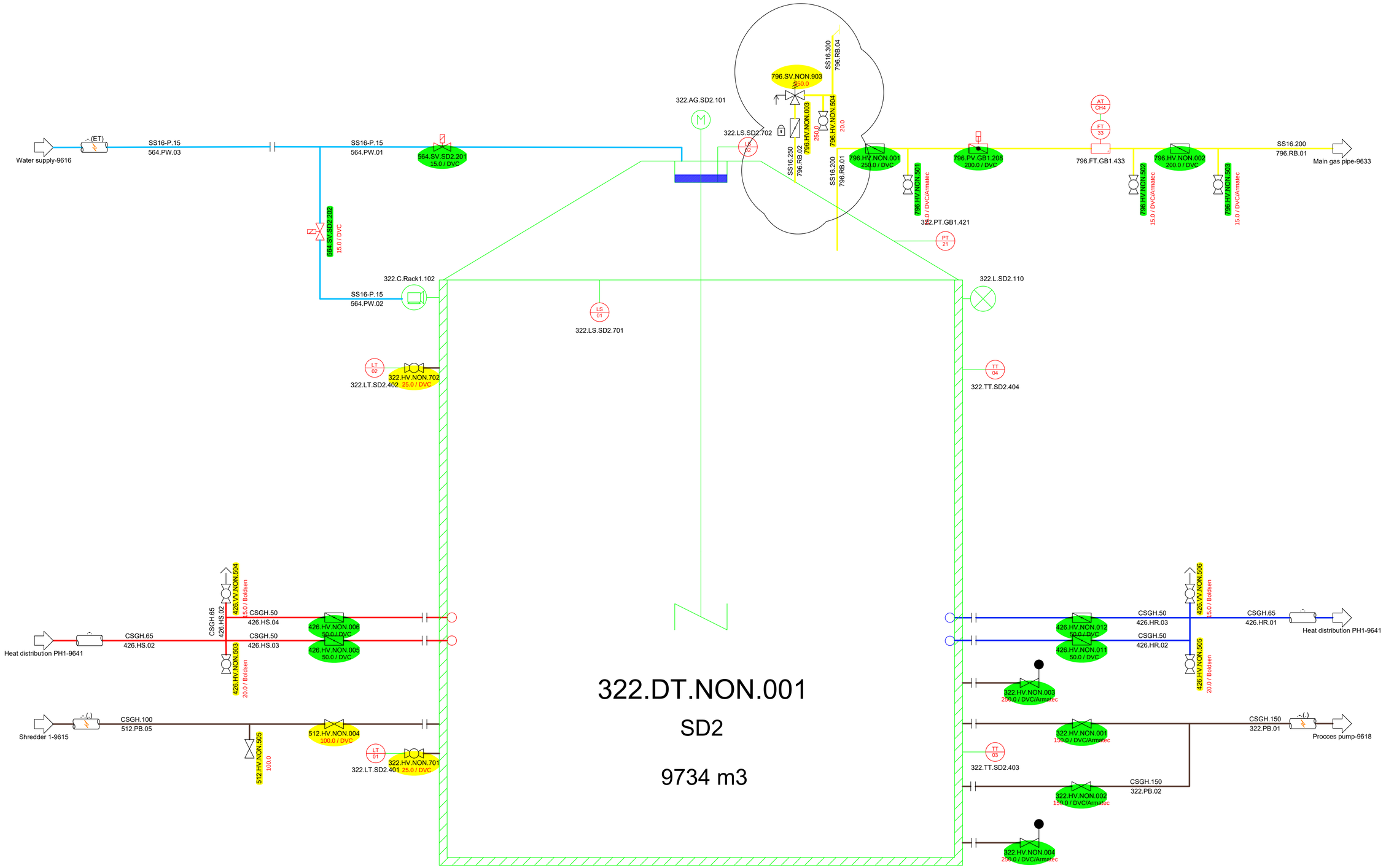

Rev. Nr.:	Rev. Dato:	Rev. Decription:

Builder:	ST1		
Project:	SLK		Project nr..1768
Subject:	Secondary digester 2 Rev. 6		Drawing nr..: 9617
Int.: MDC	QC.CM	APP.:	Date: 15-10-2025

LUNDSBY RENEWABLE SOLUTIONS

Lundsby Renewable Solutions A/S, Hjarbækvej 65, 8831 Løgstrup
Tlf.: +45 96 49 43 00 Info@lundsby.dk
This Drawing is subject to copywrite and may not be reproduced without permission from Lundsby Renewable Solutions A/S

FORMAT: A1

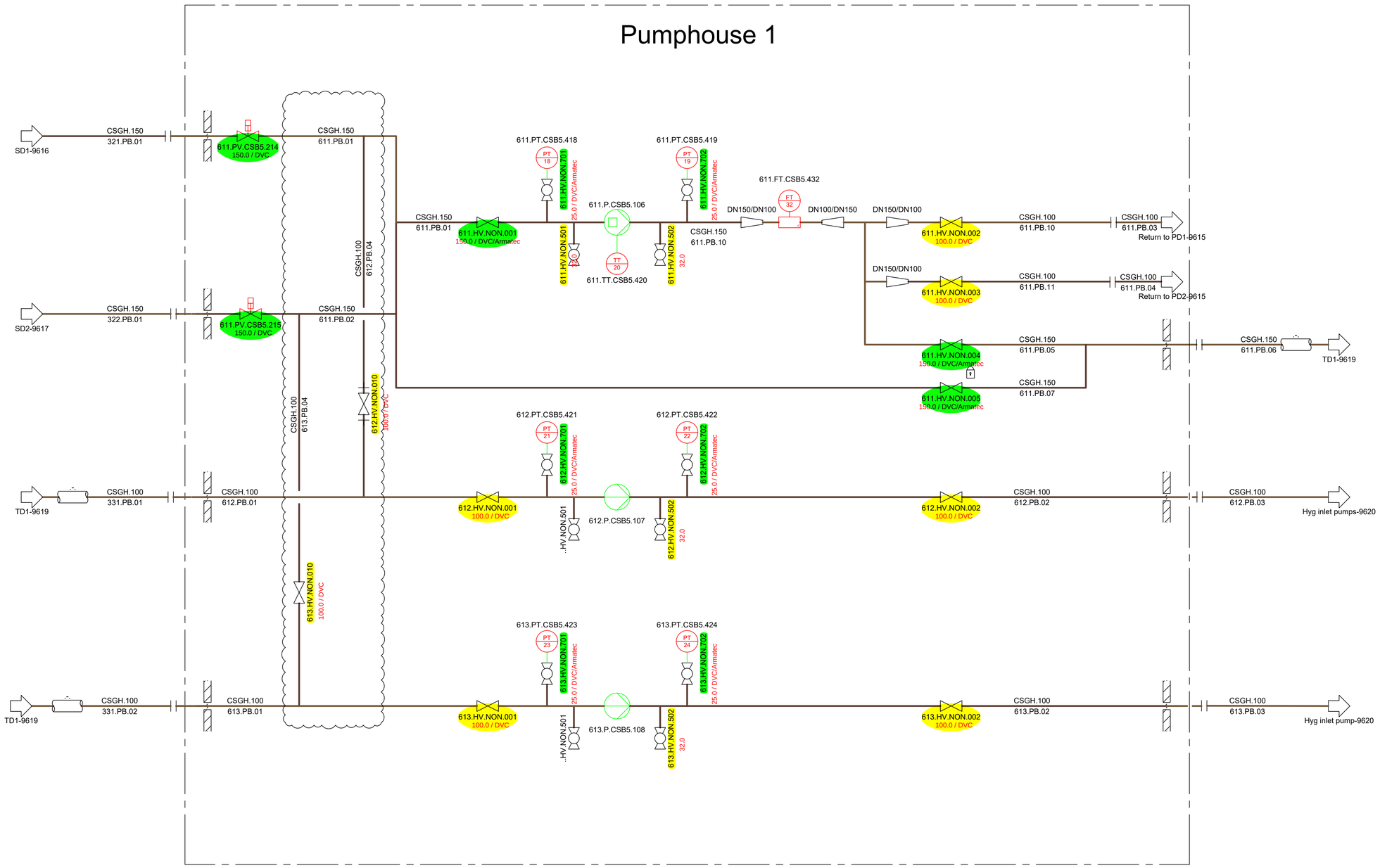

Rev. Nr.:	Rev. Dato:	Rev. Decription:

Builder:	ST1		
Project:	SLK		Project nr..:1768
Subject:	Procces pumps Rev. 6		Drawing nr..: 9618
Int.:MDC	QC.ĊM	APP.:	Date: 15-10-2025

LUNDSBY RENEWABLE SOLUTIONS
Lundsby Renewable Solutions A/S, Hjarbækvej 65, 8831 Løgstrup
Tlf.: +45 96 49 43 00 Info@lundsby.dk
This Drawing is subject to copywrite and may not be reproduced without permission from Lundsby Renewable Solutions A/S

FORMAT: A1

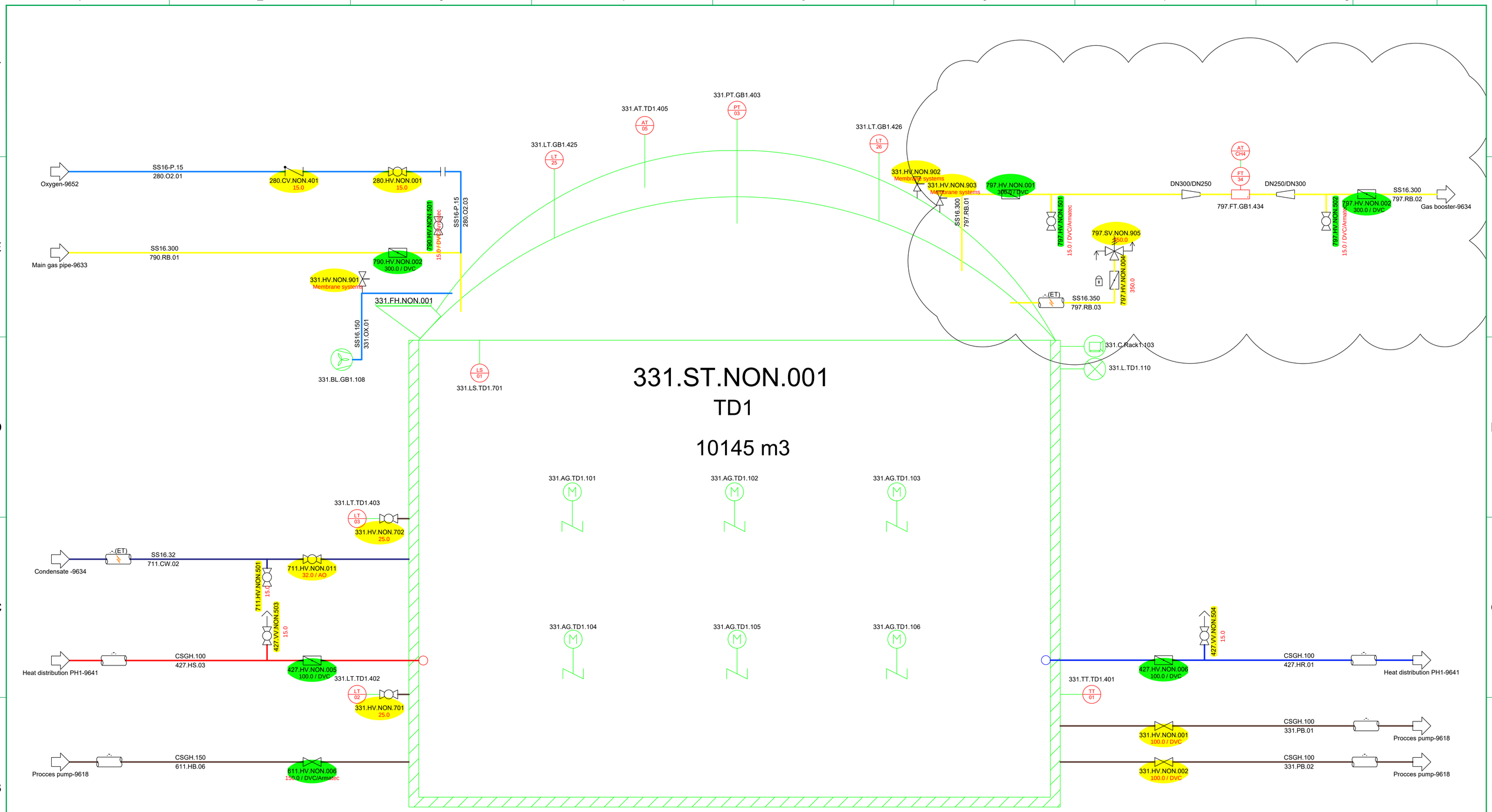

Rev. Nr.:	Rev. Dato:	Rev. Decription:

Builder: ST1

Project: SLK

Subject: Tertiary digester 1
Rev. 6

Int.: MDC | QC.CM | APP.: | Date: 15-10-2025

Project nr..1768

Drawing nr..:
9619

FORMAT: A1

LUNDSBY RENEWABLE SOLUTIONS

Lundsby Renewable Solutions A/S, Hjarbækvej 65, 8831 Løgstrup
Tlf.: +45 96 49 43 00 Info@lundsby.dk
This Drawing is subject to copywrite and may not be reproduced without permission from Lundsby Renewable Solutions A/S

Tech Building

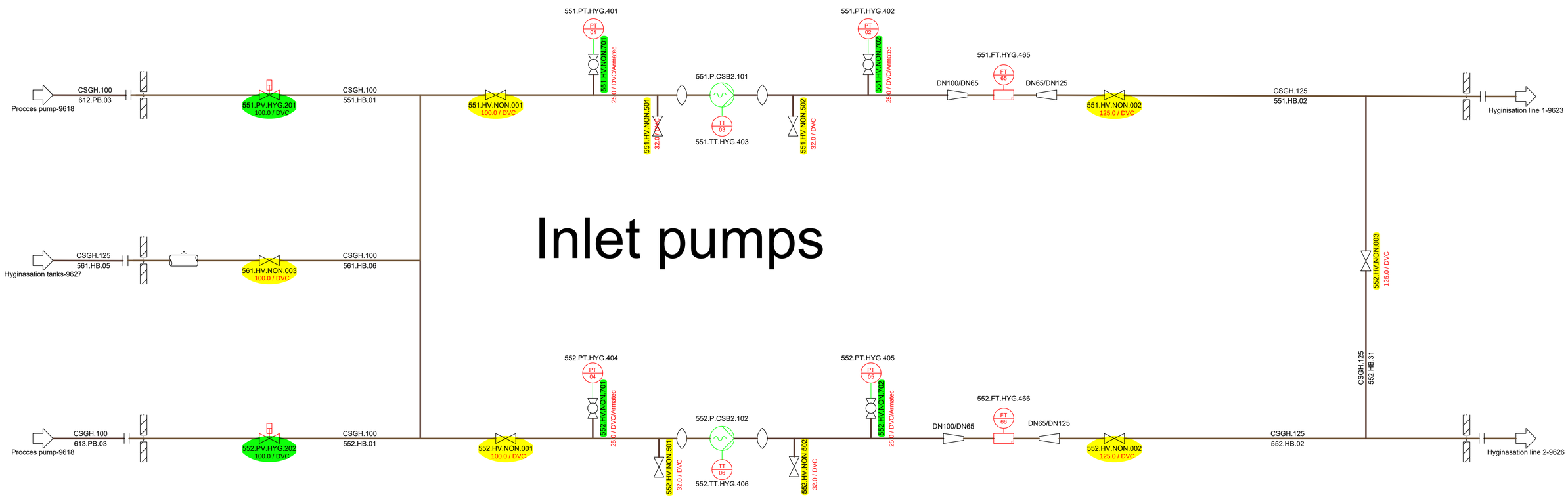

Rev. Nr.:	Rev. Dato:	Rev. Decription:

Builder:	ST1		
Project:	SLK		Project nr..:1768
Subject:	Hyginisation inlet pumps Rev. 6		Drawing nr..: 9620
Int.: MDC	QC: CM	APP.:	Date: 15-10-2025

LUNDSBY RENEWABLE SOLUTIONS
Lundsby Renewable Solutions A/S, Hjarbækvej 65, 8831 Løgstrup
Tlf.: +45 96 49 43 00 Info@lundsby.dk
This Drawing is subject to copywrite and may not be reproduced without permission from Lundsby Renewable Solutions A/S

FORMAT: A1

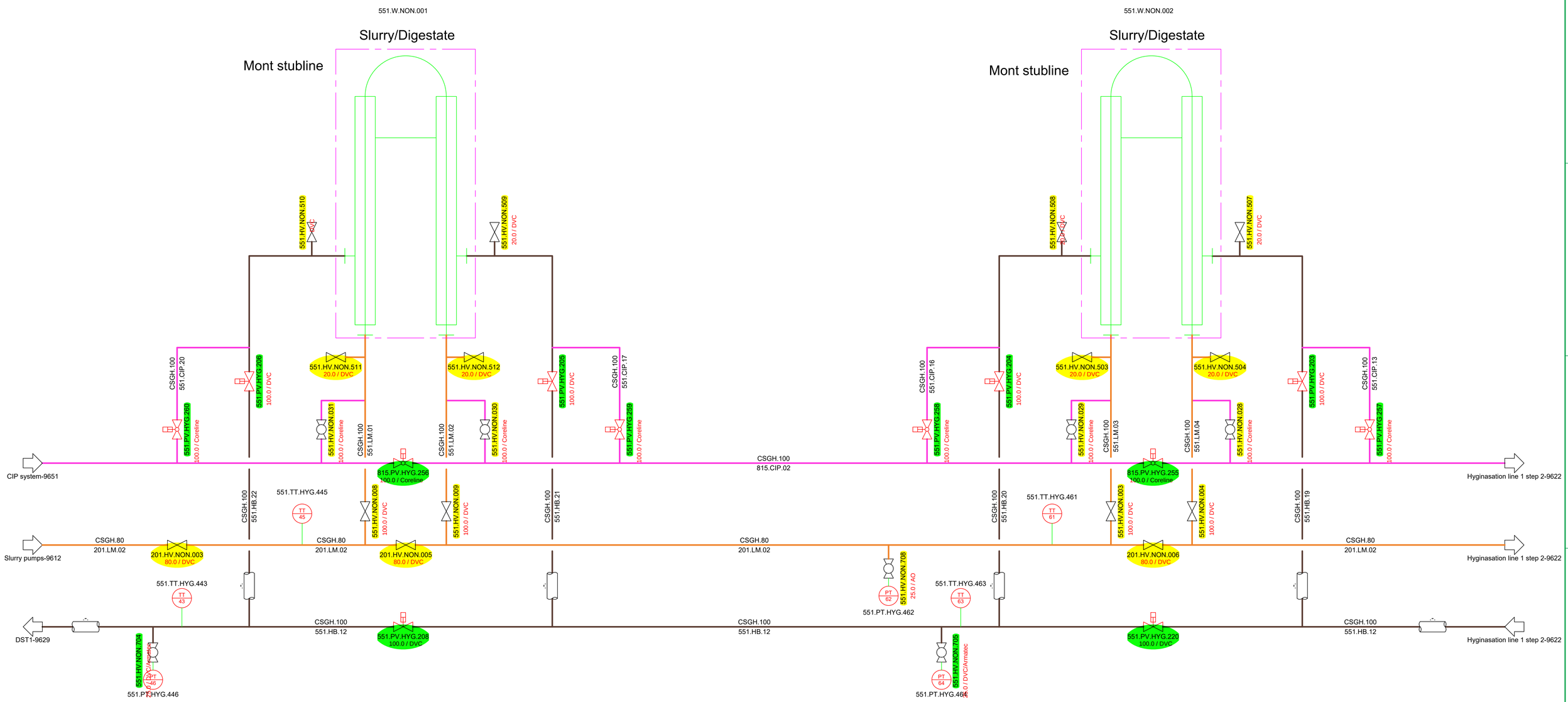

Rev. Nr.:	Rev. Dato:	Rev. Decription:

Builder:	ST1		
Project:	SLK		Project nr..:1768
Subject:	Hyginasation line 1 step 1 Rev. 6		Drawing nr..: 9621
Int.: MDC	QC.CM	APP.:	Date: 15-10-2025

LUNDSBY RENEWABLE SOLUTIONS
Lundsby Renewable Solutions A/S, Hjarbækvej 65, 8831 Løgstrup
Tlf.: +45 96 49 43 00 Info@lundsby.dk
This Drawing is subject to copywrite and may not be reproduced without permission from Lundsby Renewable Solutions A/S

FORMAT: A1

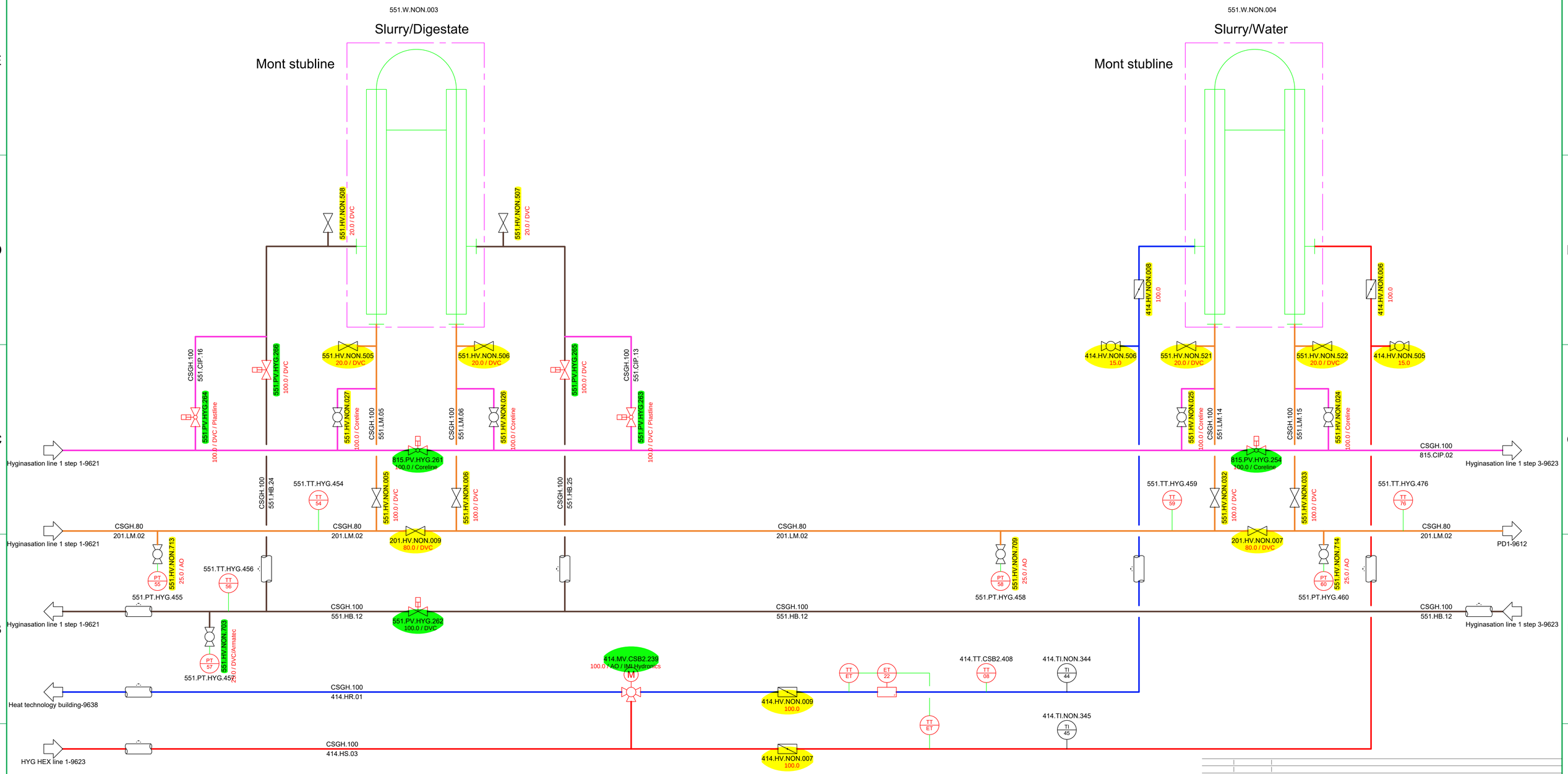

Rev. Nr.:	Rev. Dato:	Rev. Decription:

Builder:	ST1		
Project:	SLK		Project nr..:1768
Subject:	Hyginasation line 1 step 2 Rev. 6		Drawing nr..: 9622
Int.: MDC	QC.CM	APP.:	Date: 15-10-2025

LUNDSBY RENEWABLE SOLUTIONS

Lundsby Renewable Solutions A/S, Hjarbækvej 65, 8831 Løgstrup
Tlf.: +45 96 49 43 00 Info@lundsby.dk
This Drawing is subject to copywrite and may not be reproduced without permission from Lundsby Renewable Solutions A/S

FORMAT: A1

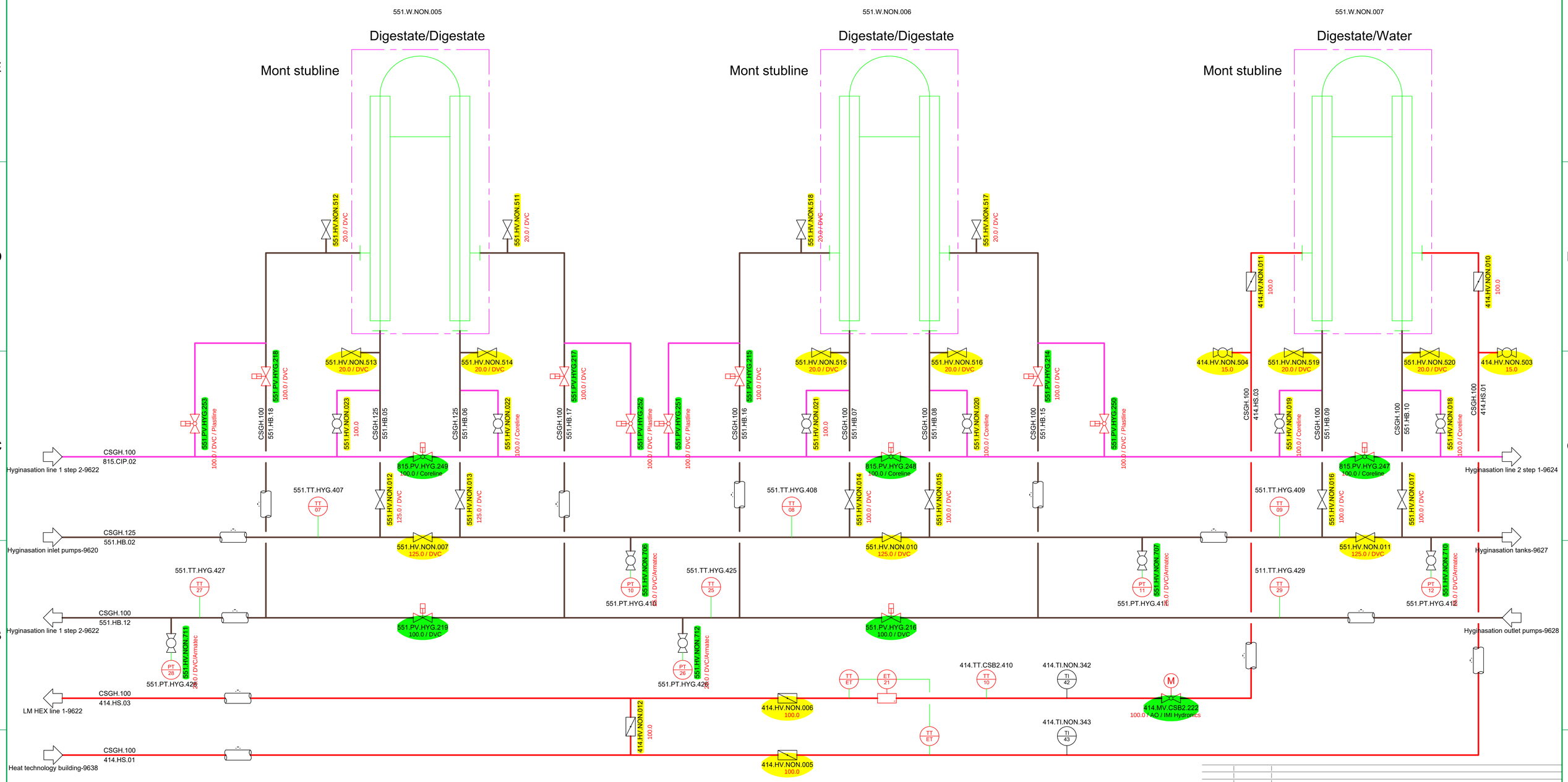

Rev. Nr.:	Rev. Dato:	Rev. Decription:

Builder:	ST1		
Project:	SLK		
Subject:	Hyginasation line 1 step 3 Rev. 6		
Int.: MDC	QC.CM	APP.:	Date: 15-10-2025

Project nr..: 1768

Drawing nr..:
9623

FORMAT: A1

LUNDSBY RENEWABLE SOLUTIONS
Lundsby Renewable Solutions A/S, Hjarbækvej 65, 8831 Løgstrup
Tlf.: +45 96 49 43 00 Info@lundsby.dk
This Drawing is subject to copywrite and may not be reproduced without permission from Lundsby Renewable Solutions A/S

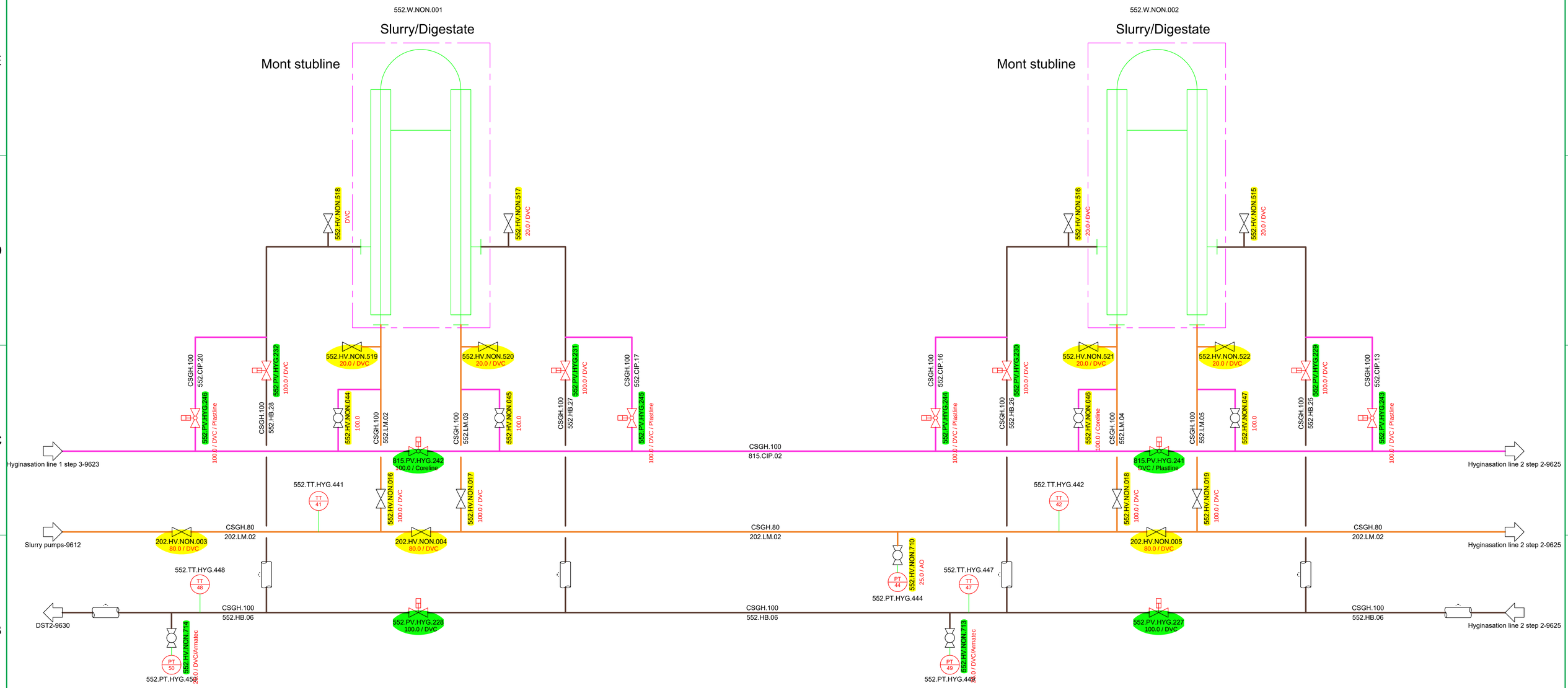

Rev. Nr.:	Rev. Dato:	Rev. Decription:

Builder:	ST1		
Project:	SLK		
Subject:	Hyginasation line 2 step 1 Rev. 6		
Int.: MDC	QC.CM	APP.:	Date: 15-10-2025

Project nr..:1768

Drawing nr..:
9624

LUNDSBY RENEWABLE SOLUTIONS
Lundsby Renewable Solutions A/S, Hjarbækvej 65, 8831 Løgstrup
Tlf.: +45 96 49 43 00 Info@lundsby.dk
This Drawing is subject to copywrite and may not be reproduced without permission from Lundsby Renewable Solutions A/S

FORMAT: A1

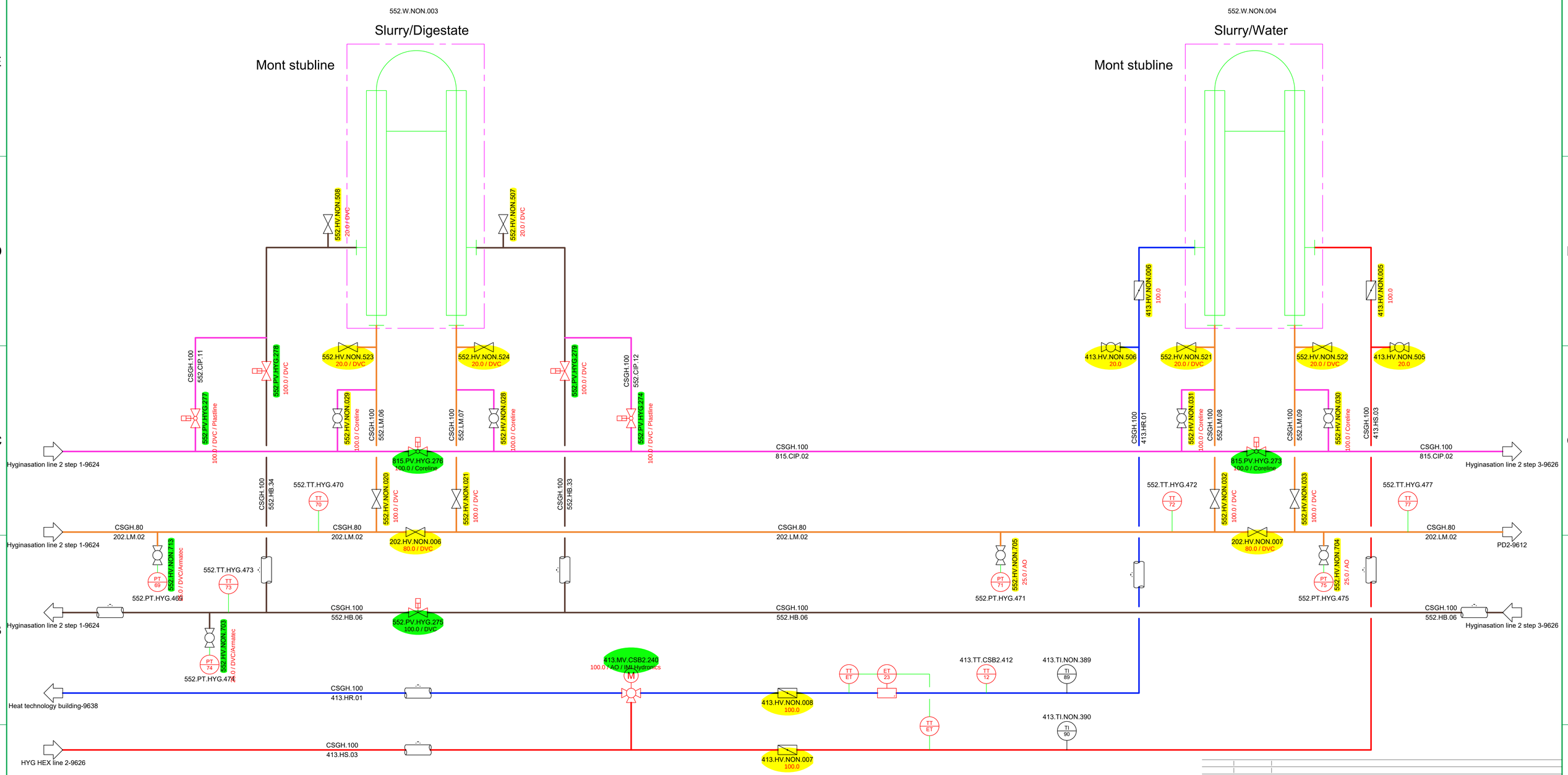

Rev. Nr.:	Rev. Dato:	Rev. Decription:

Builder:	ST1		
Project:	SLK		Project nr..:1768
Subject:	Hyginasation line 2 step 2 Rev. 6		Drawing nr..: 9625
Int.: MDC	QC.CM	APP.:	Date: 15-10-2025

LUNDSBY RENEWABLE SOLUTIONS

Lundsby Renewable Solutions A/S, Hjarbækvej 65, 8831 Løgstrup
Tlf.: +45 96 49 43 00 Info@lundsby.dk
This Drawing is subject to copywrite and may not be reproduced without permission from Lundsby Renewable Solutions A/S

FORMAT: A1

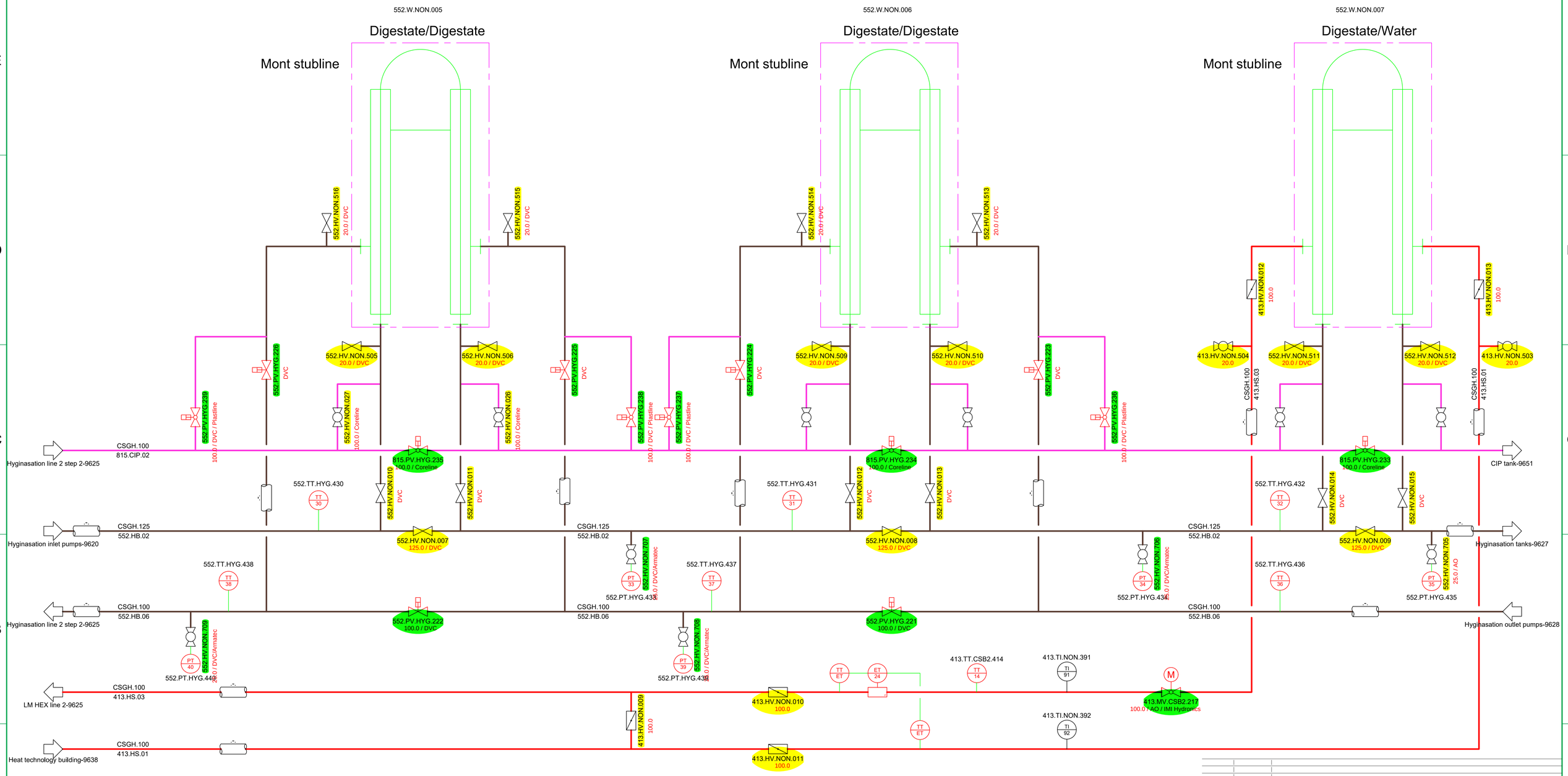

Rev. Nr.:	Rev. Dato:	Rev. Decription:

Builder:	ST1		
Project:	SLK		
Subject:	Hyginasation line 2 step 3 Rev. 6		
Int.: MDC	QC.CM	APP.:	Date: 15-10-2025

Project nr..:1768

Drawing nr..:
9626

FORMAT: A1

LUNDSBY RENEWABLE SOLUTIONS
Lundsby Renewable Solutions A/S, Hjarbækvej 65, 8831 Løgstrup
Tlf.: +45 96 49 43 00 Info@lundsby.dk
This Drawing is subject to copywrite and may not be reproduced without permission from Lundsby Renewable Solutions A/S

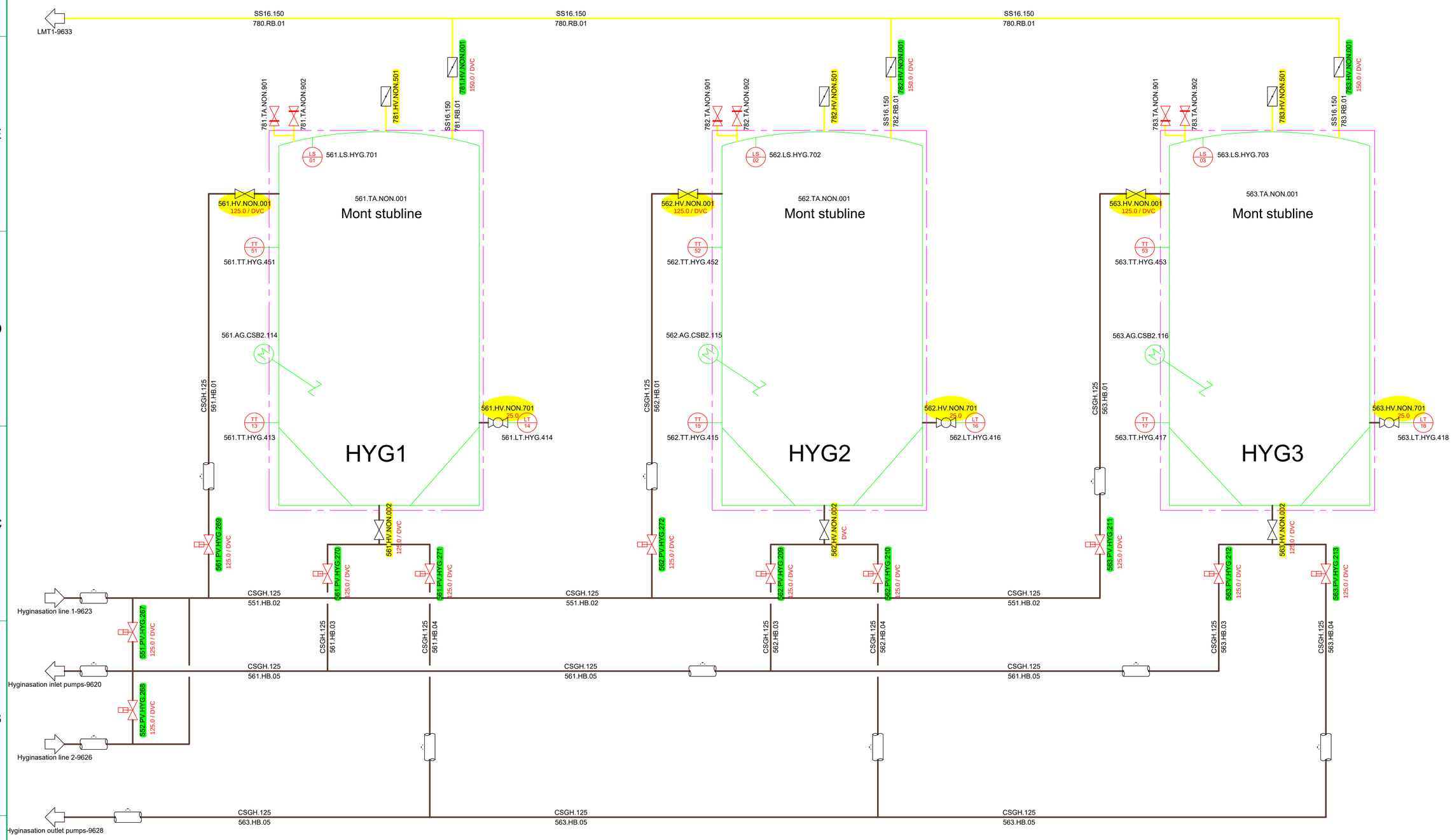

Rev. Nr.:	Rev. Dato:	Rev. Decription:

Builder: ST1

Project: SLK

Subject: Hyginasation tanks
Rev. 6

Int.: MDC | QC.CM | APP.: | Date: 15-10-2025

Project nr..: 1768

Drawing nr..:
9627

LUNDSBY RENEWABLE SOLUTIONS

Lundsby Renewable Solutions A/S, Hjarbækvej 65, 8831 Løgstrup
Tlf.: +45 96 49 43 00 Info@lundsby.dk
This Drawing is subject to copywrite and may not be reproduced without permission from Lundsby Renewable Solutions A/S

FORMAT: A1

Tech Building

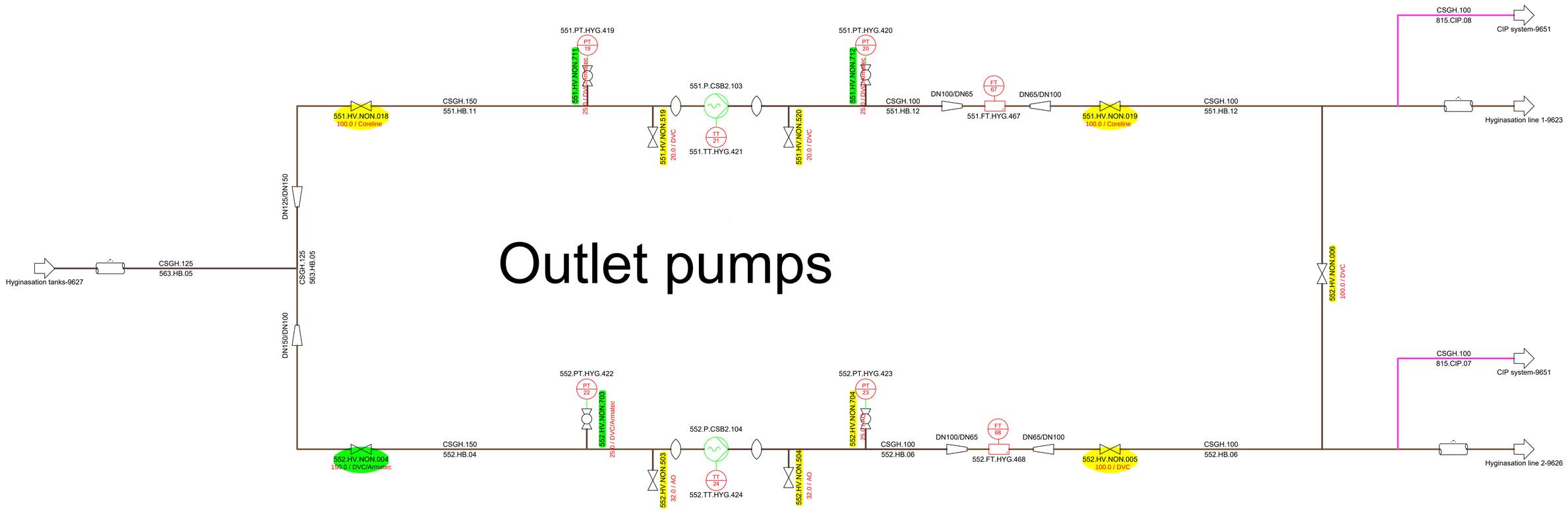

Rev. Nr.:	Rev. Dato:	Rev. Decription:

Builder: ST1

Project: SLK

Subject: Hyginasation outlet pumps
Rev. 6

Int.: MDC | QC.CM | APP.: | Date: 15-10-2025

Project nr..: 1768

Drawing nr..: 9628

FORMAT: A1

LUNDSBY RENEWABLE SOLUTIONS
Lundsby Renewable Solutions A/S, Hjarbækvej 65, 8831 Løgstrup
Tlf.: +45 96 49 43 00 Info@lundsby.dk
This Drawing is subject to copywrite and may not be reproduced without permission from Lundsby Renewable Solutions A/S

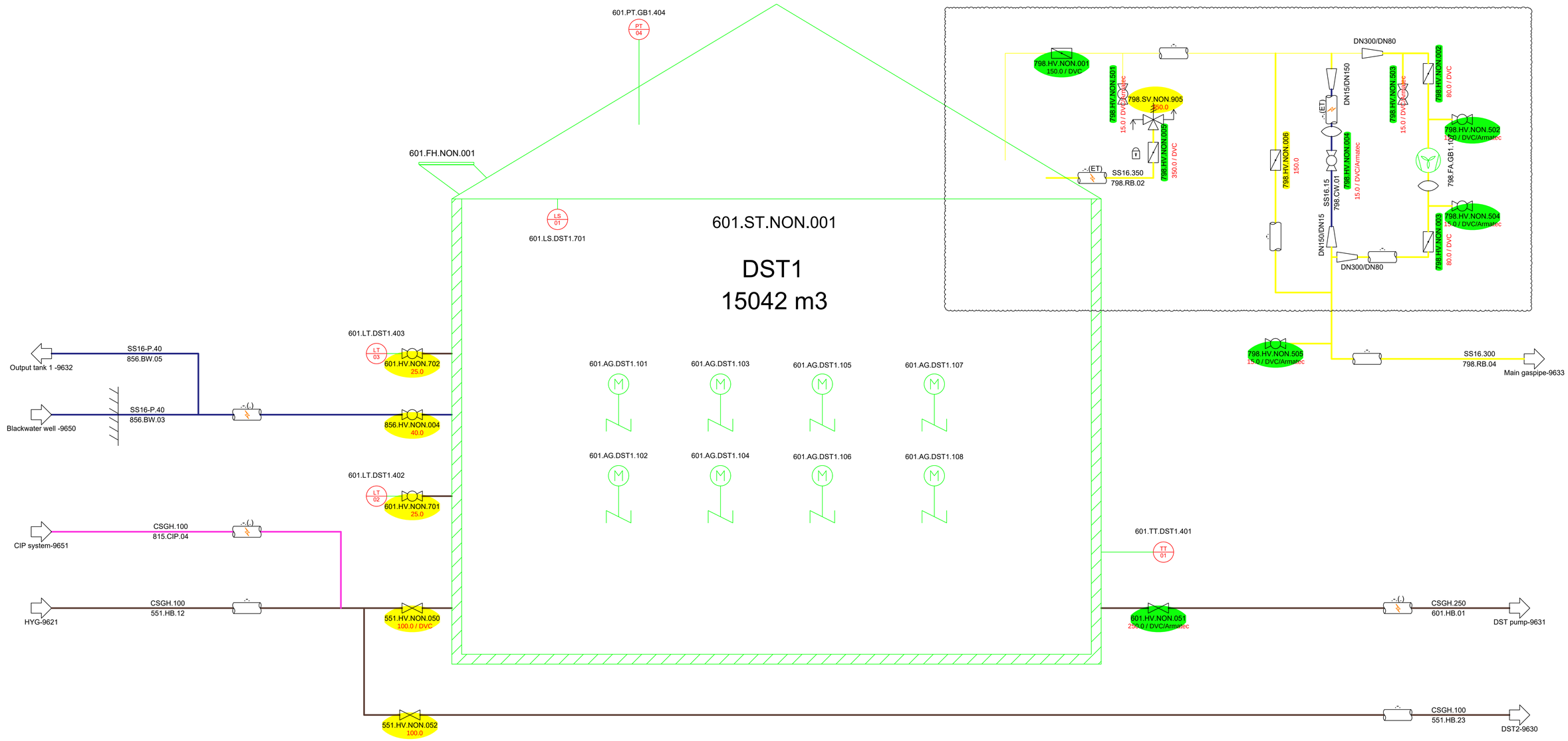

Rev. Nr.:	Rev. Dato:	Rev. Decription:

Builder: ST1

Project: SLK

Subject: Digestate Storage Tank 1
Rev. 6

Int.: MDC | QC.CM | APP.: | Date: 15-10-2025

Project nr..: 1768

Drawing nr..:
9629

FORMAT: A1

LUNDSBY RENEWABLE SOLUTIONS
Lundsby Renewable Solutions A/S, Hjarbækvej 65, 8831 Løgstrup
Tlf.: +45 96 49 43 00 Info@lundsby.dk
This Drawing is subject to copywrite and may not be reproduced without permission from Lundsby Renewable Solutions A/S

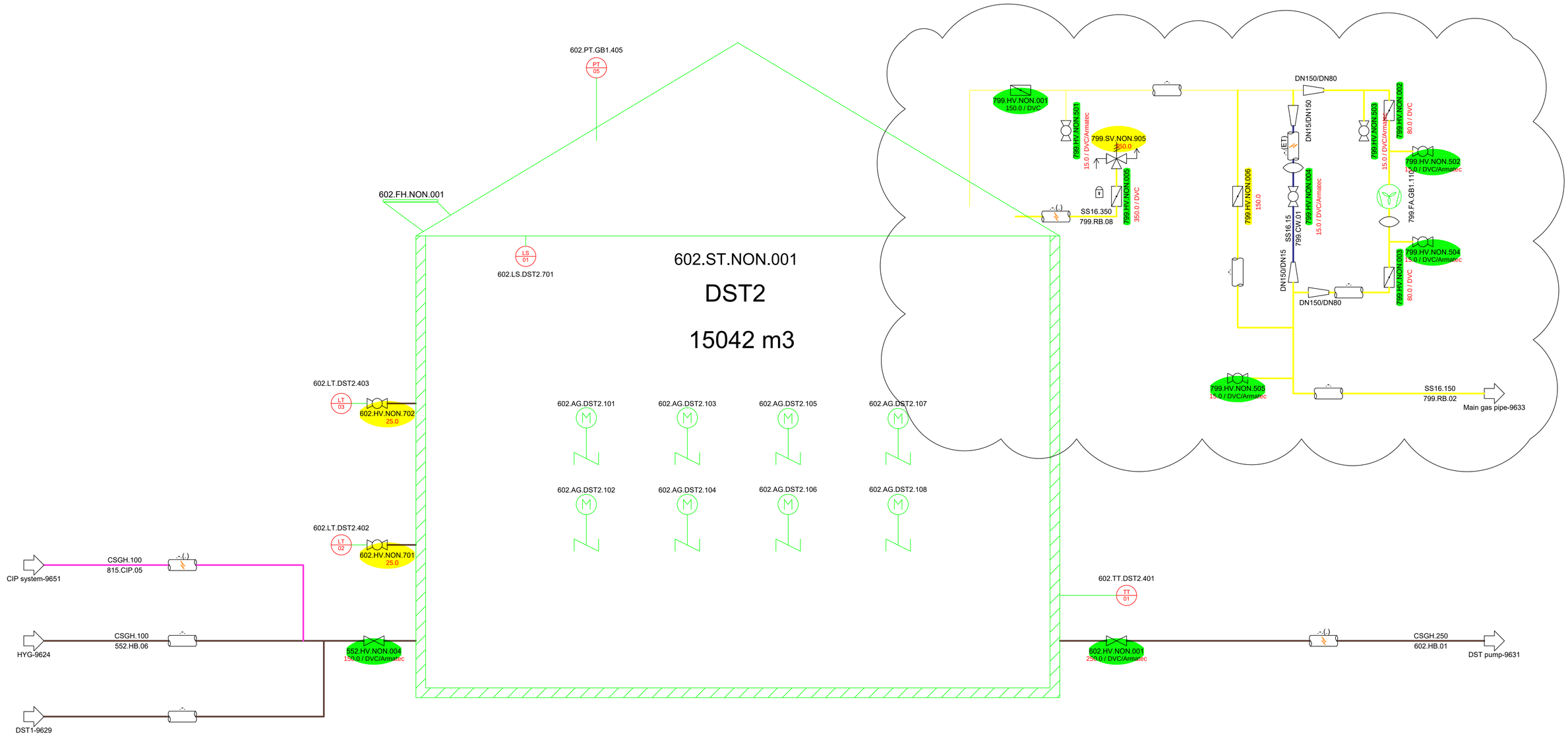

Rev. Nr.:	Rev. Dato:	Rev. Decription:

Builder: ST1

Project: SLK

Subject: Digestate Storage Tank 2
Rev. 6

Int.: MDC | QC.CM | APP.: | Date: 15-10-2025

Project nr..: 1768

Drawing nr..:
9630

FORMAT: A1

LUNDSBY RENEWABLE SOLUTIONS

Lundsby Renewable Solutions A/S, Hjarbækvej 65, 8831 Løgstrup
Tlf.: +45 96 49 43 00 Info@lundsby.dk
This Drawing is subject to copywrite and may not be reproduced without permission from Lundsby Renewable Solutions A/S

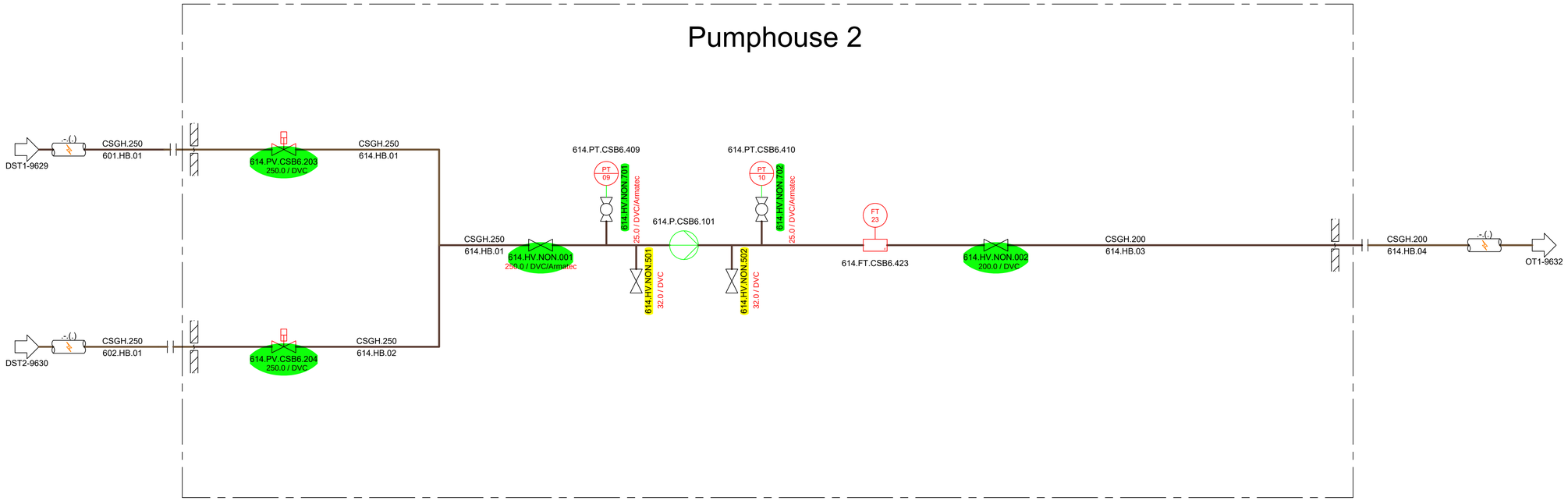

Rev. Nr.:	Rev. Dato:	Rev. Decription:

Builder: ST1

Project: SLK

Subject: DST pump
Rev. 6

Int.: MDC | QC: CM | APP.: | Date: 15-10-2025

Project nr..: 1768

Drawing nr..: 9631

FORMAT: A1

LUNDSBY RENEWABLE SOLUTIONS
Lundsby Renewable Solutions A/S, Hjarbækvej 65, 8831 Løgstrup
Tlf.: +45 96 49 43 00 Info@lundsby.dk
This Drawing is subject to copywrite and may not be reproduced without permission from Lundsby Renewable Solutions A/S

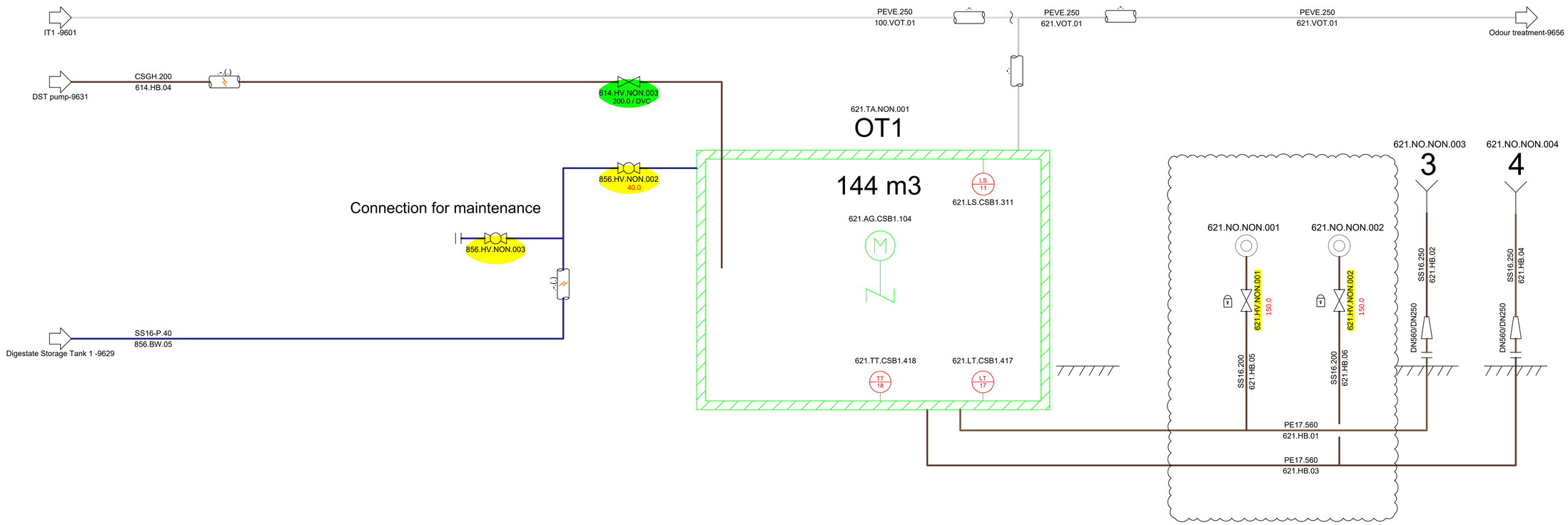

Rev. Nr.:	Rev. Dato:	Rev. Decription:

Builder:	ST1		
Project:	SLK		Project nr..1768
Subject:	Output tank 1 Rev. 6		Drawing nr..: 9632
Int.: MDC	QC.ĊM	APP.:	Date: 15-10-2025

LUNDSBY RENEWABLE SOLUTIONS
Lundsby Renewable Solutions A/S, Hjarbækvej 65, 8831 Løgstrup
Tlf.: +45 96 49 43 00 Info@lundsby.dk
This Drawing is subject to copywrite and may not be reproduced without permission from Lundsby Renewable Solutions A/S

FORMAT: A1

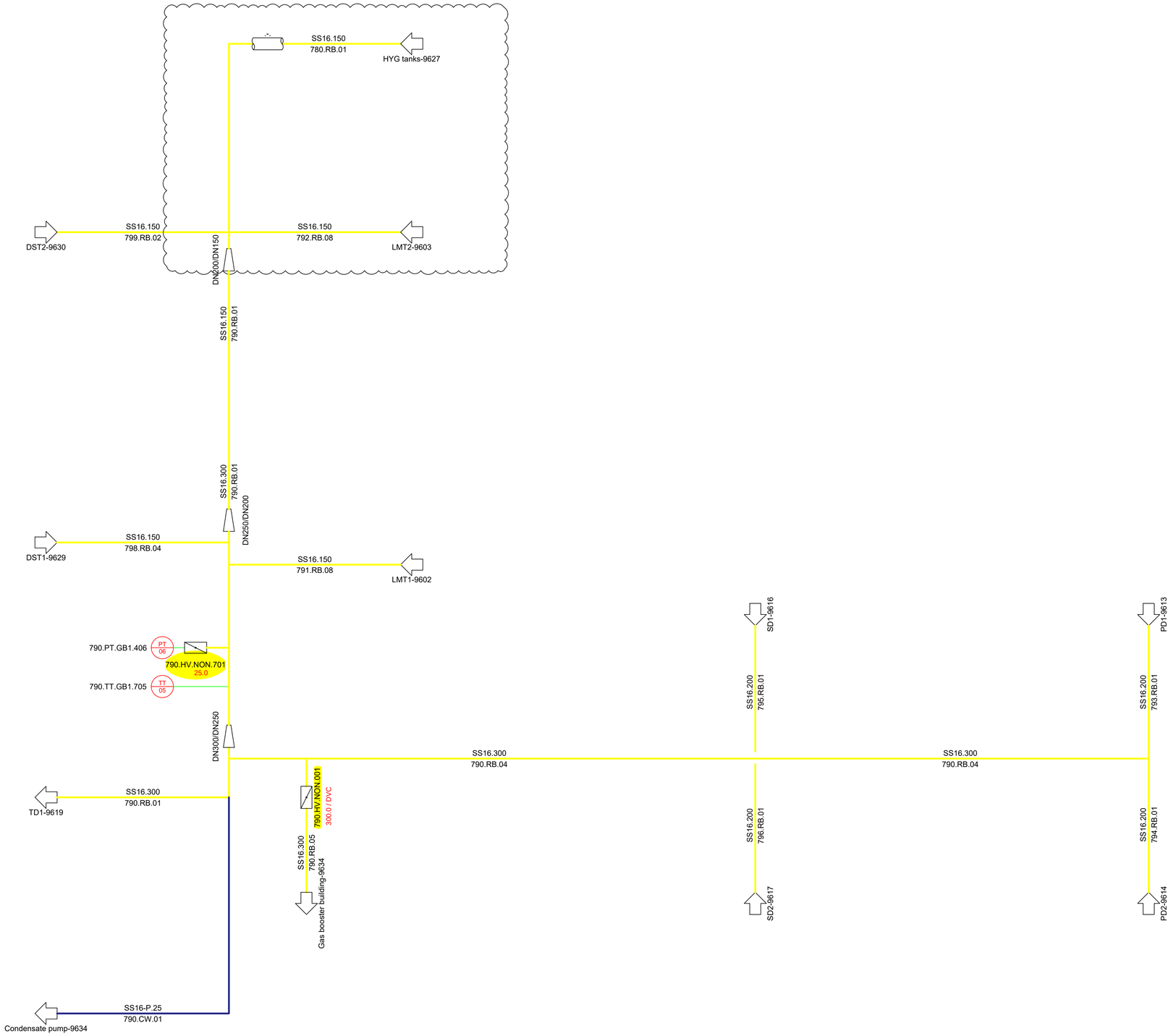

Rev. Nr.:	Rev. Dato:	Rev. Decription:

Builder:	ST1		
Project:	SLK		Project nr..: 1768
Subject:	Main gas pipe Rev. 6		Drawing nr..: 9633
Int.: MDC	QC.: CM	APP.:	Date: 15-10-2025

LUNDSBY RENEWABLE SOLUTIONS
Lundsby Renewable Solutions A/S, Hjarbækvej 65, 8831 Løgstrup
Tlf.: +45 96 49 43 00 Info@lundsby.dk
This Drawing is subject to copywrite and may not be reproduced without permission from Lundsby Renewable Solutions A/S

FORMAT: A1

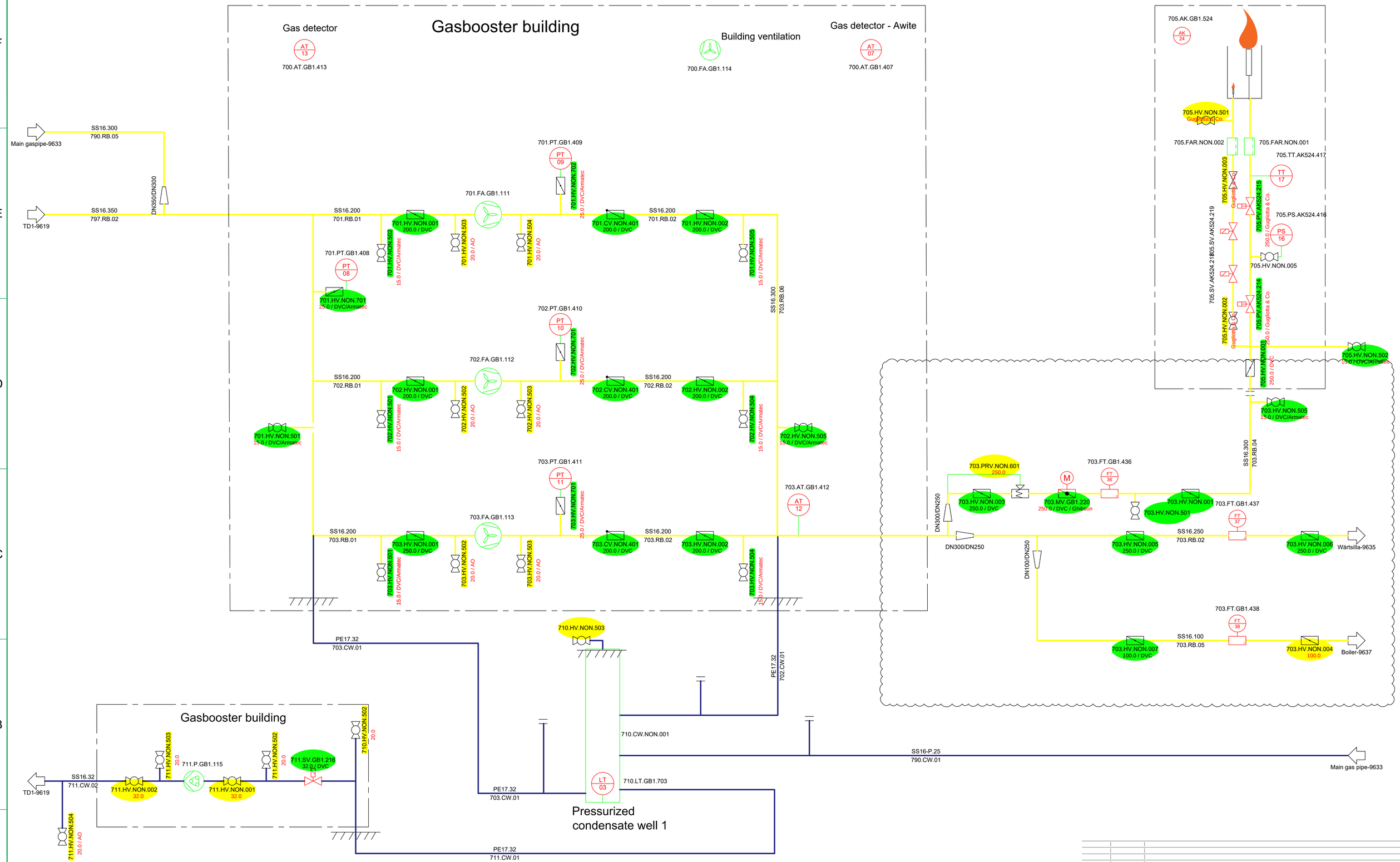

Rev. Nr.:	Rev. Dato:	Rev. Decription:

Builder:	ST1		
Project:	SLK		Project nr..1768
Subject:	Gas booster and flare Rev. 6		Drawing nr..: 9634
Int.: MDC	QC.CM	APP.:	Date: 15-10-2025

LUNDSBY RENEWABLE SOLUTIONS

Lundsby Renewable Solutions A/S, Hjarbækvej 65, 8831 Løgstrup
Tlf.: +45 96 49 43 00 Info@lundsby.dk

This Drawing is subject to copywrite and may not be reproduced without permission from Lundsby Renewable Solutions A/S

FORMAT: A1

Wärtsillä

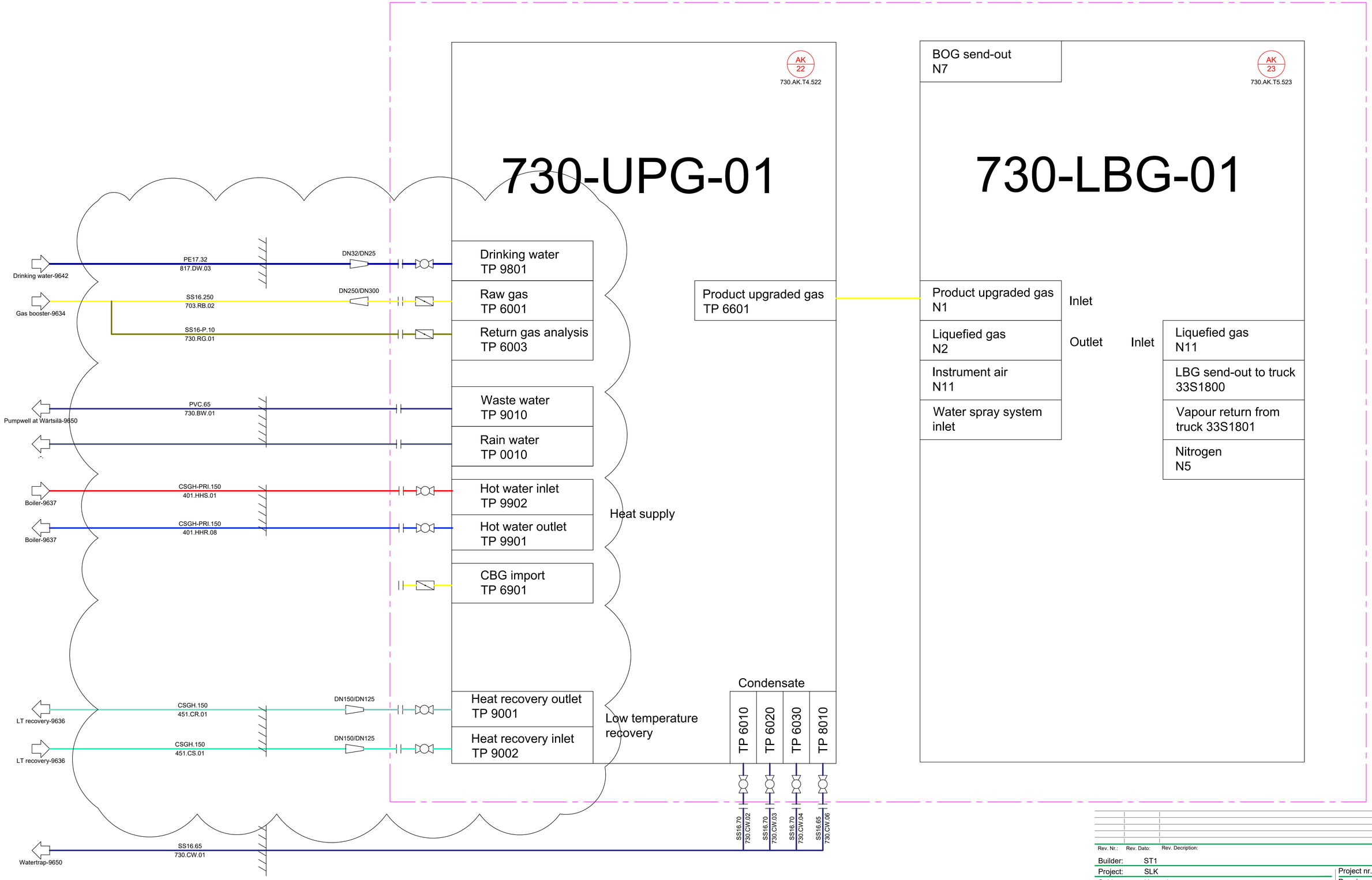

Rev. Nr.:	Rev. Dato:	Rev. Decription:

Builder:	ST1			
Project:	SLK			Project nr..:1768
Subject:	Upgrade Rev. 6			Drawing nr..: 9635
Int.: MDC	QC.CM	APP.:	Date: 15-10-2025	

LUNDSBY RENEWABLE SOLUTIONS

Lundsby Renewable Solutions A/S, Hjarbækvej 65, 8831 Løgstrup
Tlf.: +45 96 49 43 00 Info@lundsby.dk
This Drawing is subject to copywrite and may not be reproduced without permission from Lundsby Renewable Solutions A/S

FORMAT: A1

Heat pump scope

Technology building

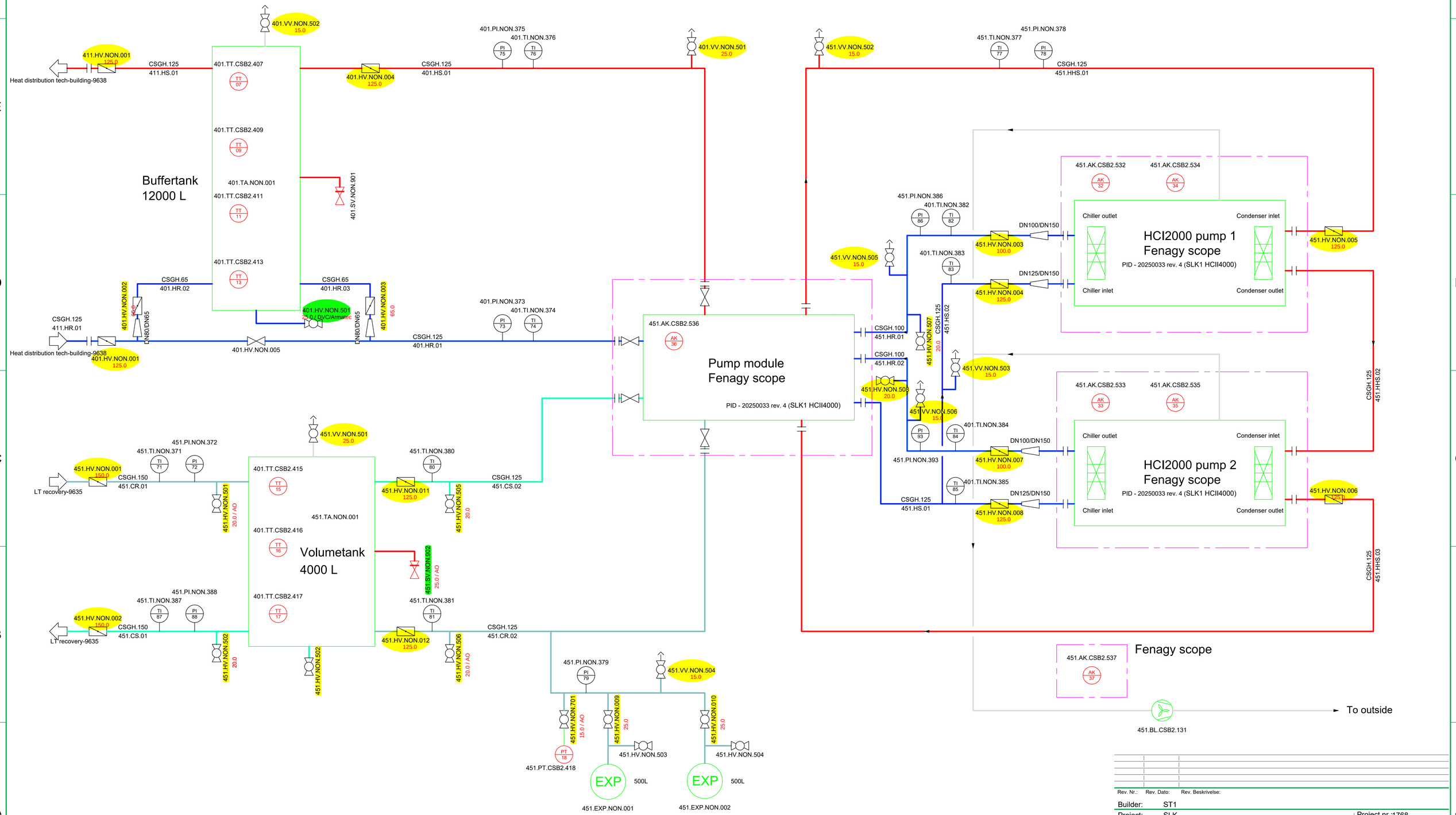

Rev. Nr.:	Rev. Dato:	Rev. Beskrivelse:

Builder: ST1
Project: SLK
Subject: Heat pumps
Rev. 6

Int.:MDC | QC: CM | APP.: | Date: 15-10-2025

Project nr.:1768
Drawing nr.: 9636

LUNDSBY RENEWABLE SOLUTIONS
Lundsby Biogas A/S, Hjarbækvej 65, 8831 Løgstrup
Tlf.: +45 96 49 43 00 Info@lundsbybiogas.dk
Denne tegning er underlagt copywrite op må ikke reproduceres unden tilladelse fra Lundsbybiogas A/S

FORMAT: A1

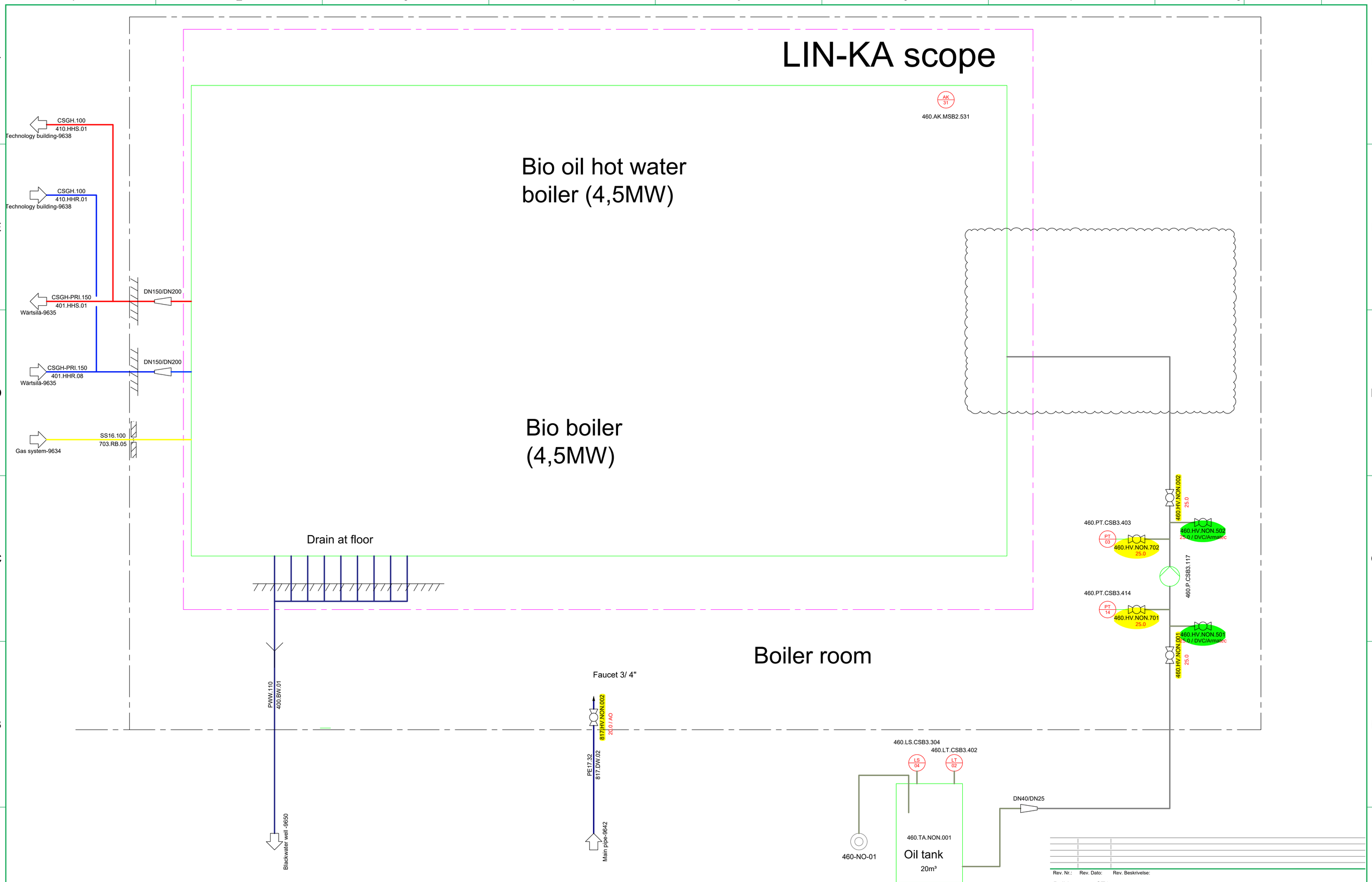

Rev. Nr.:	Rev. Dato:	Rev. Beskrivelse:

Builder:	ST1		
Project:	SLK		Project nr.: 1768
Subject:	Boiler room Rev. 6		Drawing nr.: 9637
Int.:MDC	QC: CM	APP.:	Date: 15-10-2025

LUNDSBY RENEWABLE SOLUTIONS

Lundsby Biogas A/S, Hjarbækvej 65, 8831 Løgstrup
Tlf.: +45 96 49 43 00 Info@lundsbybiogas.dk

Denne tegning er underlagt copyvrite op må ikke reproduceres uden tilladelse fra Lundsbybiogas A/S

FORMAT: A1

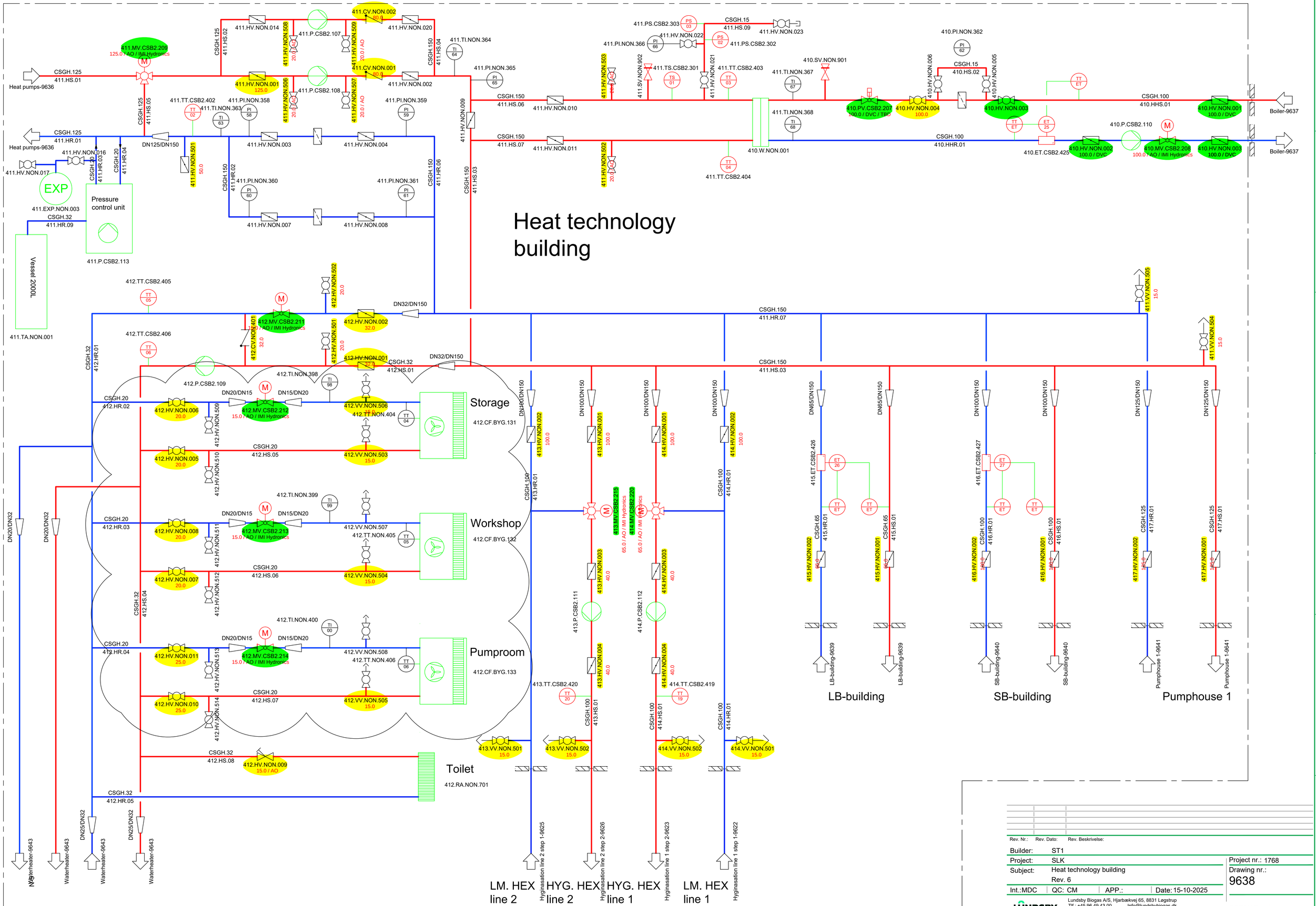

Rev. Nr.:	Rev. Dato:	Rev. Beskrivelse:

Builder: ST1
Project: SLK
Subject: Heat technology building
Rev. 6

Int.:MDC | QC: CM | APP.: | Date: 15-10-2025

Project nr.: 1768
Drawing nr.: 9638

LUNDSBY RENEWABLE SOLUTIONS

Lundsby Biogas A/S, Hjarbækvej 65, 8831 Løgstrup
Tlf.: +45 96 49 43 00 Info@lundsbybiogas.dk

Denne tegning er underlagt copywrite op må ikke reproduceres uden tilladelse fra Lundsbybiogas A/S

FORMAT: A1

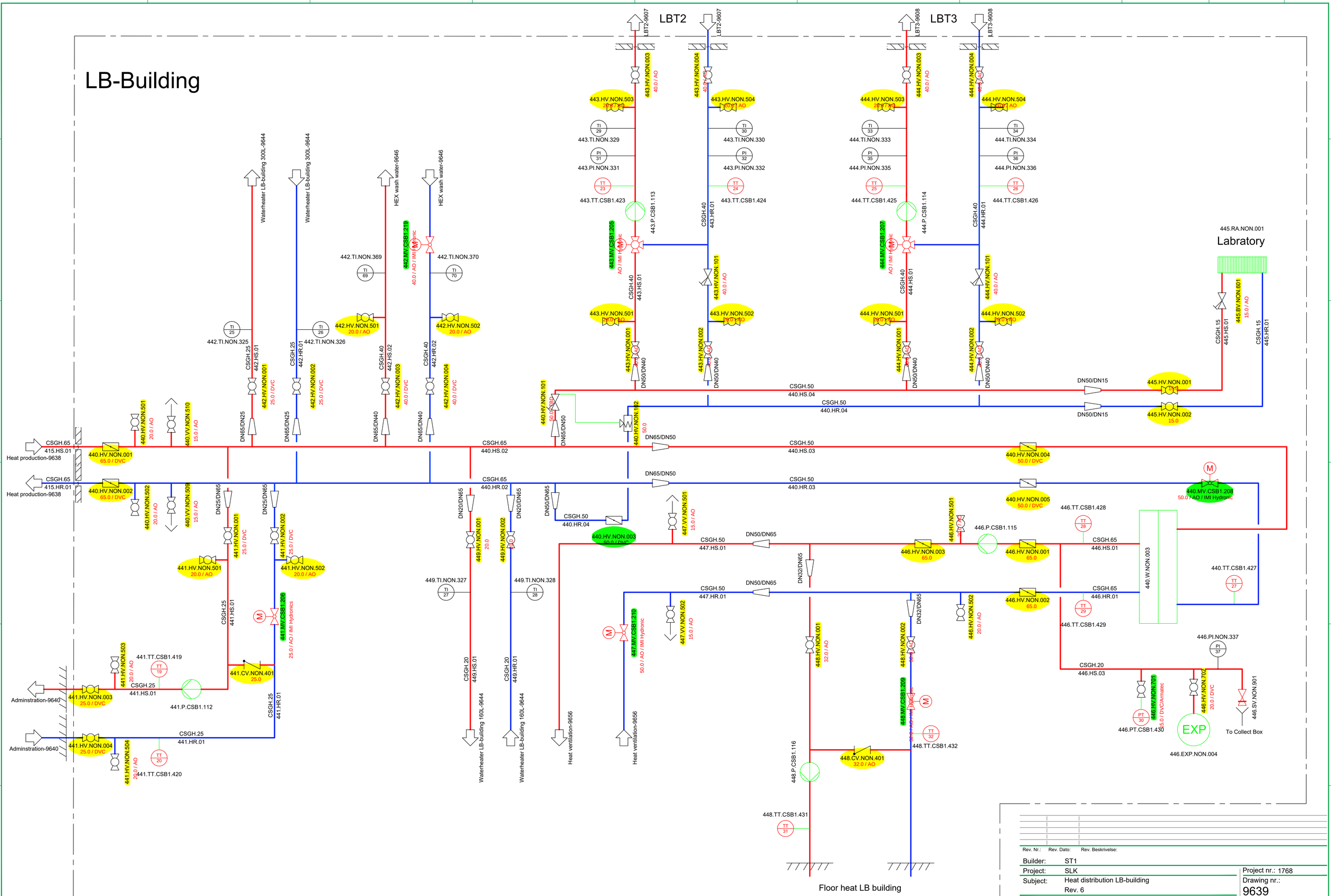

Rev. Nr.:	Rev. Dato:	Rev. Beskrivelse:

Builder: ST1

Project: SLK

Subject: Heat distribution LB-building
Rev. 6

Int.:MDC | QC: CM | APP.: | Date: 15-10-2025

Project nr.: 1768

Drawing nr.: 9639

FORMAT: A1

LUNDSBY RENEWABLE SOLUTIONS
Lundsby Biogas A/S, Hjarbækvej 65, 8831 Løgstrup
Tlf.: +45 96 49 43 00 Info@lundsbybiogas.dk

Denne tegning er underlagt copywrite op må ikke reproduceres uden tilladelse fra Lundsbybiogas A/S

SB-Building

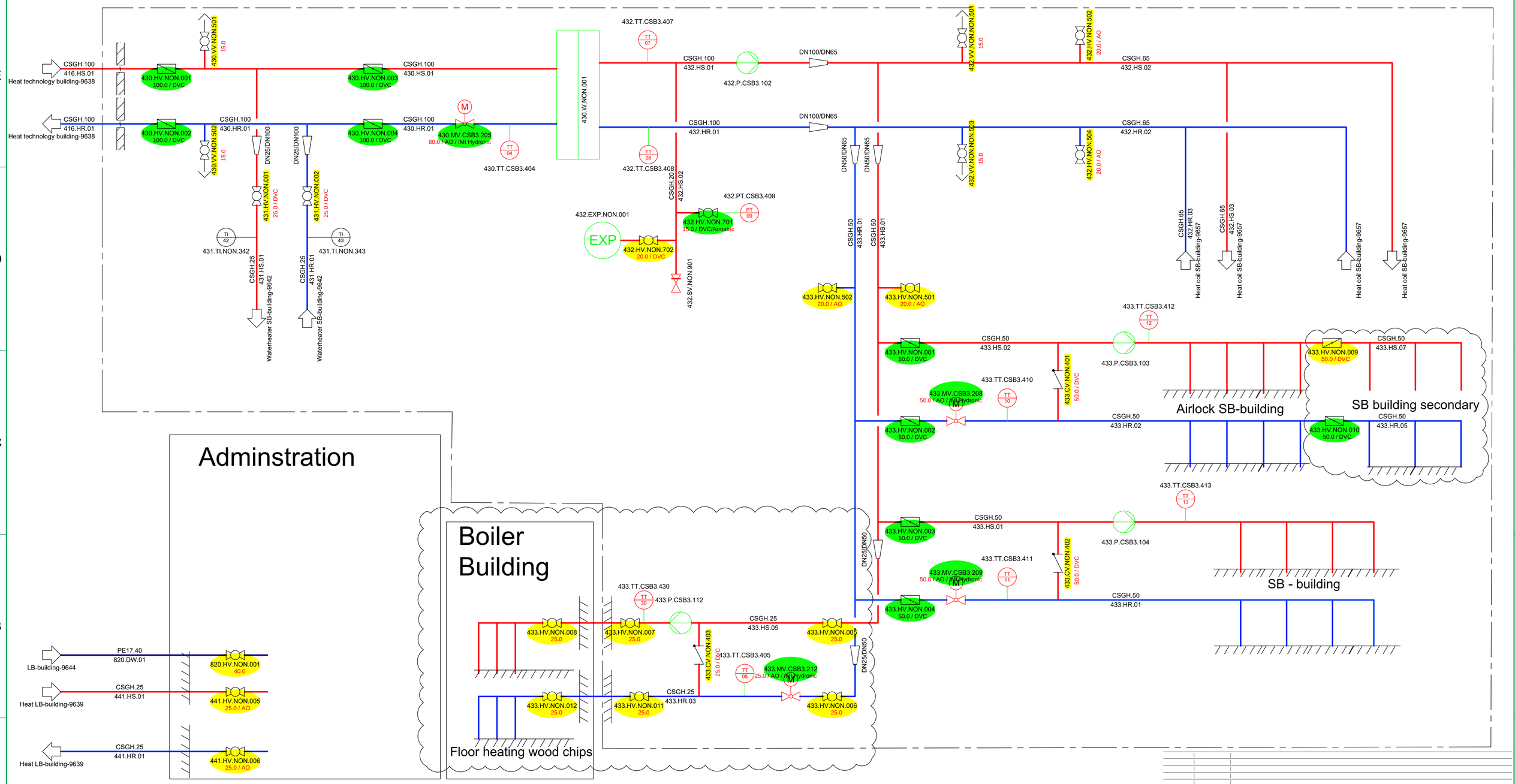

Rev. Nr.:	Rev. Dato:	Rev. Beskrivelse:

Builder: ST1

Project: SLK

Subject: Heat distribution SB-building
Rev. 6

Int.:MDC | QC: CM | APP.: | Date: 15-10-2025

Project nr.: 1768

Drawing nr.: 9640

LUNDSBY RENEWABLE SOLUTIONS
Lundsby Biogas A/S, Hjarbækvej 65, 8831 Løgstrup
Tlf.: +45 96 49 43 00 Info@lundsbybiogas.dk
Denne tegning er underlagt copywrite op må ikke reproduceres uden tilladelse fra Lundsbybiogas A/S

FORMAT: A1

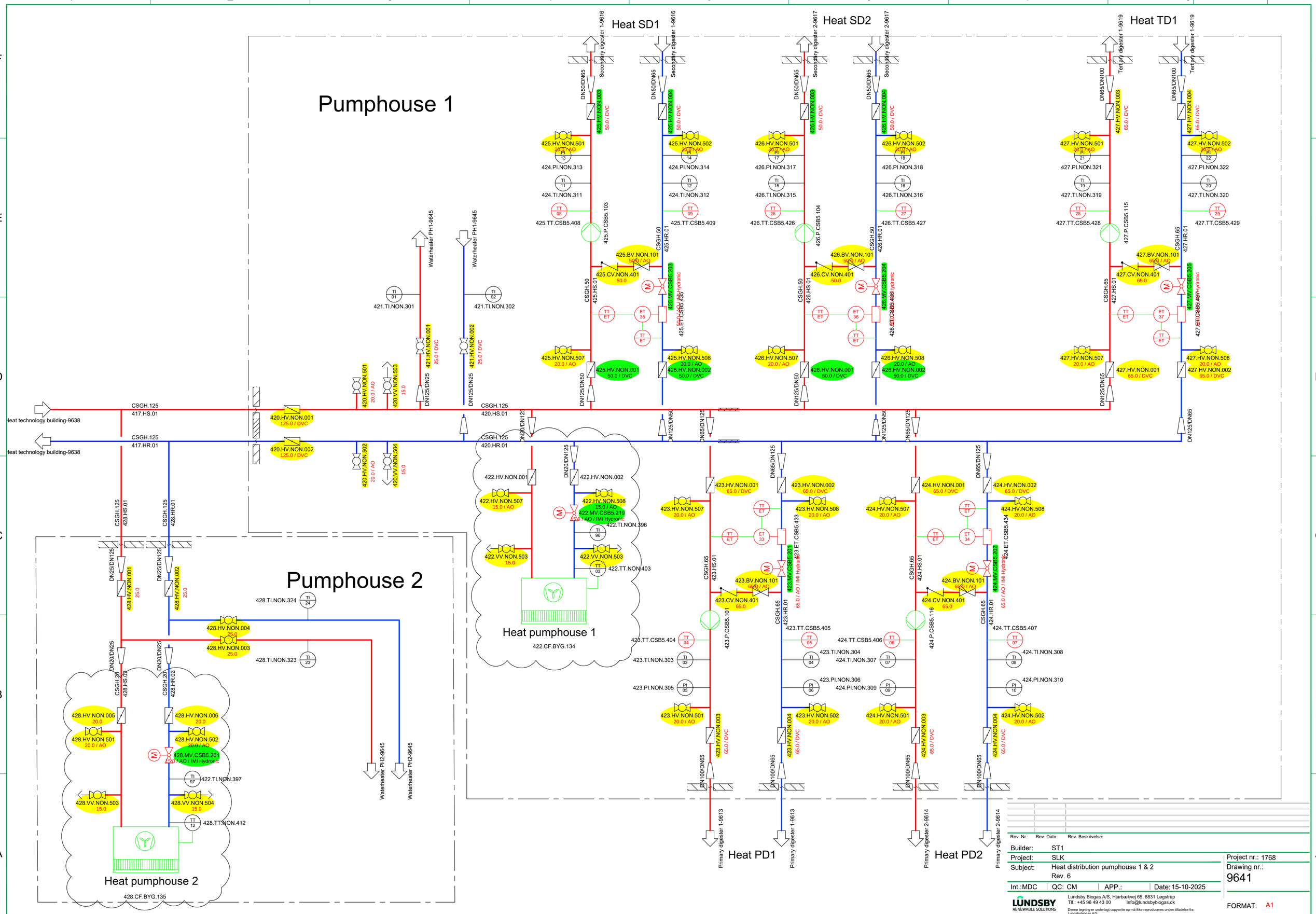
Heat SD1
Heat SD2
Heat TD1
Pumphouse 1
Pumphouse 2
Heat pumphouse 1
422.CF.BYG.134
Heat pumphouse 2
428.CF.BYG.135
Heat PD1
Heat PD2
Secondary digester 1-9616
Secondary digester 2-9617
Tertiary digester 1-9619
Primary digester 1-9613
Primary digester 2-9614
Waterheater PH1-9645
Waterheater PH2-9645
Heat technology building-9638
CSGH.125
417.HS.01
417.HR.01
420.HS.01
420.HR.01
421.TI.NON.301
421.TI.NON.302
421.HV.NON.001
421.HV.NON.002
420.HV.NON.001
420.HV.NON.002
420.HV.NON.501
420.HV.NON.502
420.VV.NON.503
420.VV.NON.504
422.HV.NON.001
422.HV.NON.002
422.HV.NON.507
422.HV.NON.508
422.MV.CSB5.219
422.TI.NON.396
422.VV.NON.503
422.TT.NON.403
428.HV.NON.001
428.HV.NON.002
428.HV.NON.003
428.HV.NON.004
428.TI.NON.324
428.TI.NON.323
428.HV.NON.005
428.HV.NON.006
428.HV.NON.501
428.HV.NON.502
428.MV.CSB6.201
422.TI.NON.397
428.VV.NON.503
428.VV.NON.504
428.TT.NON.412
425.HV.NON.501
425.HV.NON.502
424.PI.NON.313
424.PI.NON.314
424.TI.NON.311
424.TI.NON.312
425.TT.CSB5.408
425.TT.CSB5.409
425.P.CSB5.103
425.BV.NON.101
425.CV.NON.401
425.MV.CSB5.203
425.ET.CSB5.435
425.HV.NON.507
425.HV.NON.508
425.HV.NON.001
425.HV.NON.002
426.HV.NON.501
426.HV.NON.502
426.PI.NON.317
426.PI.NON.318
426.TI.NON.315
426.TI.NON.316
426.TT.CSB5.426
426.TT.CSB5.427
426.P.CSB5.104
426.BV.NON.101
426.CV.NON.401
426.MV.CSB5.204
426.ET.CSB5.436
426.HV.NON.507
426.HV.NON.508
426.HV.NON.001
426.HV.NON.002
427.HV.NON.501
427.HV.NON.502
427.PI.NON.321
427.PI.NON.322
427.TI.NON.319
427.TI.NON.320
427.TT.CSB5.428
427.TT.CSB5.429
427.P.CSB5.115
427.BV.NON.101
427.CV.NON.401
427.MV.CSB5.205
427.ET.CSB5.437
427.HV.NON.507
427.HV.NON.508
427.HV.NON.001
427.HV.NON.002
423.HV.NON.001
423.HV.NON.002
423.HV.NON.507
423.HV.NON.508
423.ET.CSB5.433
423.MV.CSB5.201
423.BV.NON.101
423.CV.NON.401
423.P.CSB5.101
423.TT.CSB5.404
423.TT.CSB5.405
423.TI.NON.303
423.TI.NON.304
423.PI.NON.305
423.PI.NON.306
423.HV.NON.501
423.HV.NON.502
424.HV.NON.001
424.HV.NON.002
424.HV.NON.507
424.HV.NON.508
424.ET.CSB5.434
424.MV.CSB5.202
424.BV.NON.101
424.CV.NON.401
424.P.CSB5.116
424.TT.CSB5.406
424.TT.CSB5.407
424.TI.NON.307
424.TI.NON.308
424.PI.NON.309
424.PI.NON.310
424.HV.NON.501
424.HV.NON.502
DN50/DN65
DN65/DN100
DN125/DN25
DN125/DN50
DN125/DN65
DN20/DN125
DN65/DN125
DN100/DN65
CSGH.50
CSGH.65
CSGH.20
425.HS.01
425.HR.01
426.HS.01
426.HR.01
427.HS.01
427.HR.01
428.HS.01
428.HR.01
428.HS.02
428.HR.02
Rev. Nr.:
Rev. Dato:
Rev. Beskrivelse:
Builder: ST1
Project: SLK
Subject: Heat distribution pumphouse 1 & 2
Rev. 6
Int.:MDC
QC: CM
APP.:
Date: 15-10-2025
Project nr.: 1768
Drawing nr.: 9641
LUNDSBY RENEWABLE SOLUTIONS
Lundsby Biogas A/S, Hjarbækvej 65, 8831 Løgstrup
Tlf.: +45 96 49 43 00
Info@lundsbybiogas.dk
Denne tegning er underlagt copywrite op må ikke reproduceres uden tilladelse fra Lundsbybiogas A/S
FORMAT: A1

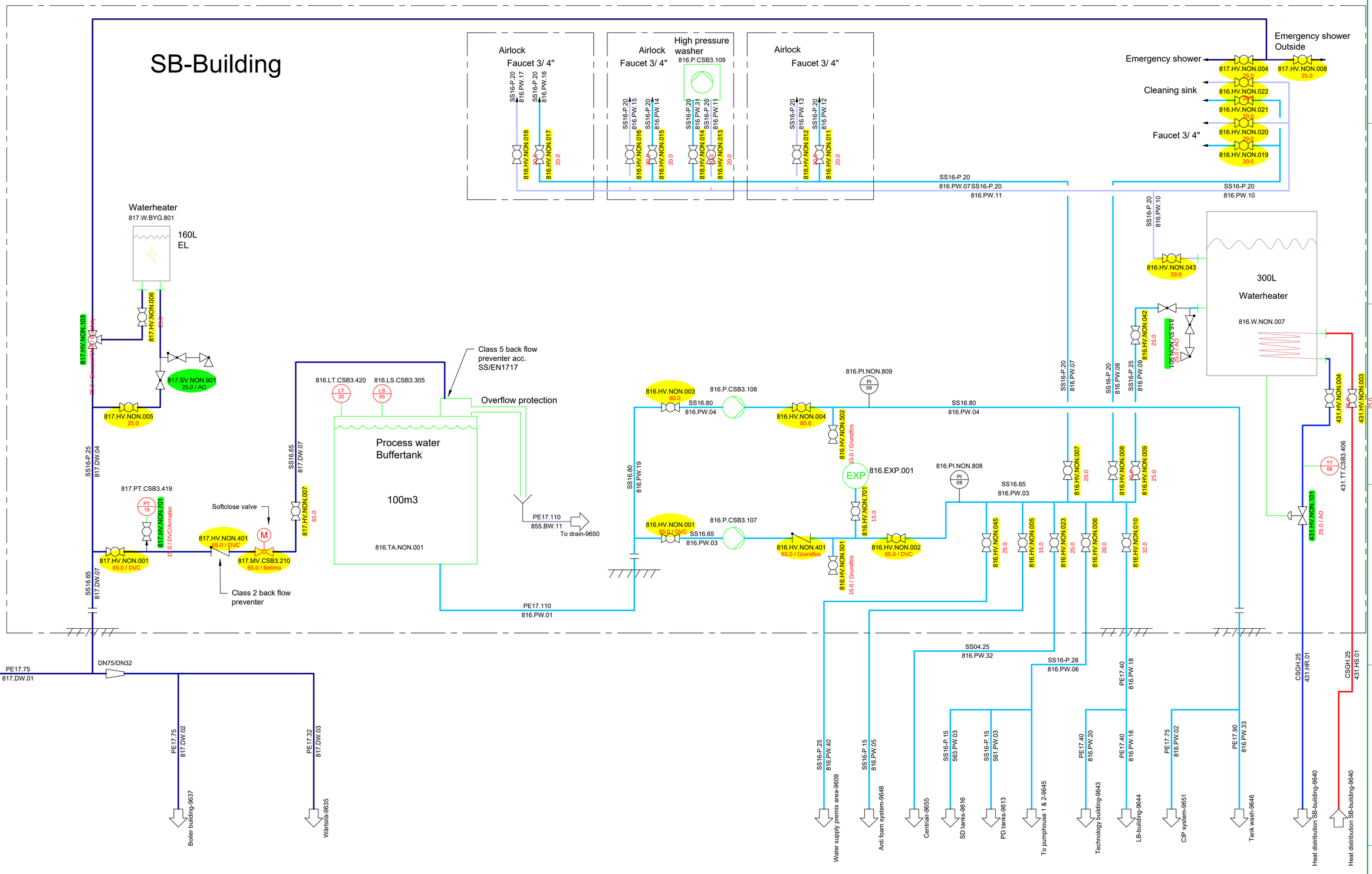

Rev. Nr.:	Rev. Dato:	Rev. Beskrivelse:

Builder: ST1
Project: SLK
Subject: Water distribution SB-building
Rev. 6

Int.:MDC | QC:CM | APP.: | Date: 15-10-2025

Project nr.: 1768
Drawing nr.: 9642

LUNDSBY RENEWABLE SOLUTIONS

Lundsby Biogas A/S, Hjarbækvej 65, 8831 Løgstrup
Tlf.: +45 96 49 43 00 Info@lundsbybiogas.dk

Denne tegning er underlagt copywrite op må ikke reproduceres uden tilladelse fra Lundsbybiogas A/S

FORMAT: A1

Technology building

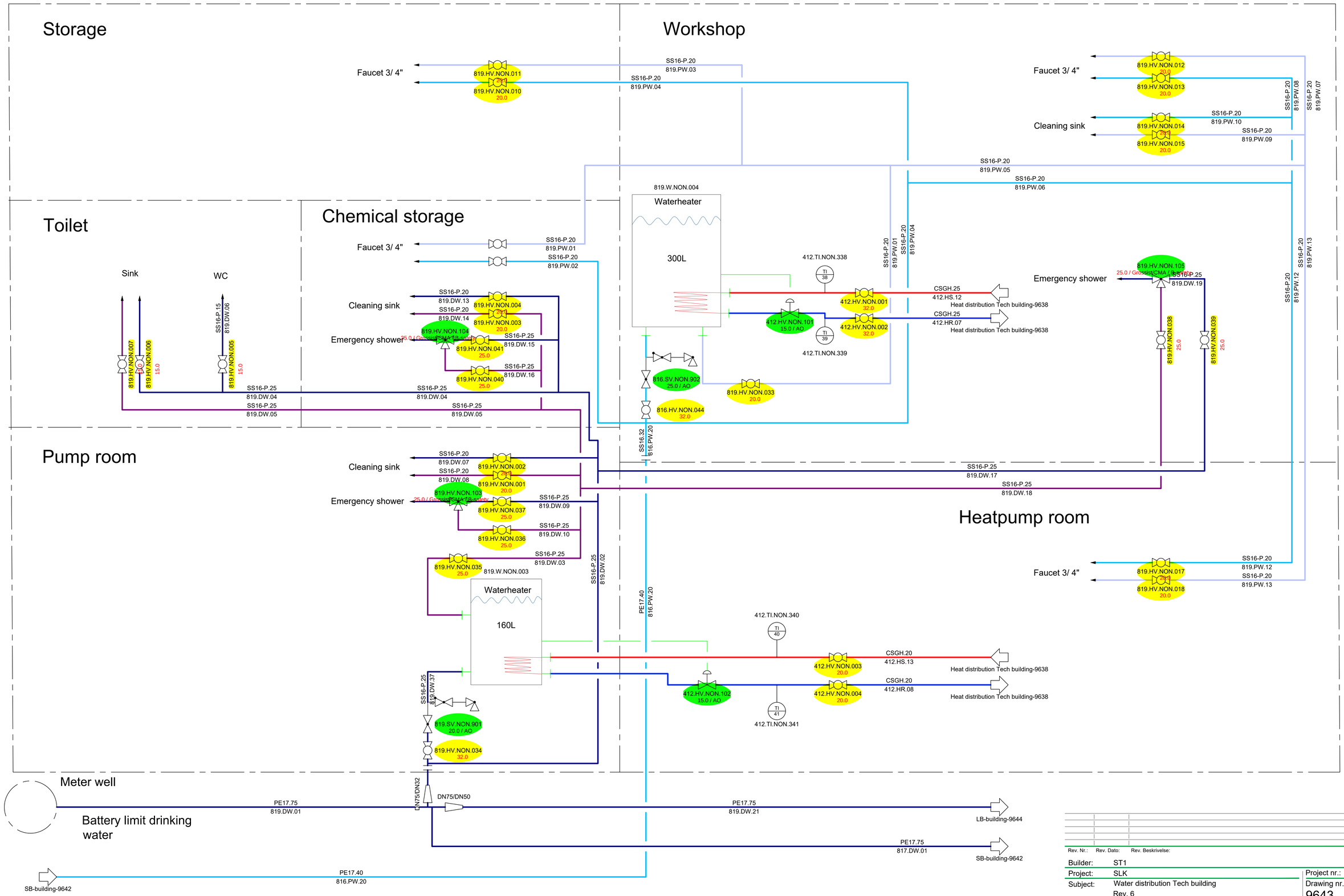

Rev. Nr.:	Rev. Dato:	Rev. Beskrivelse:

Builder:	ST1		
Project:	SLK		Project nr.: 1768
Subject:	Water distribution Tech building Rev. 6		Drawing nr.: 9643
Int.:MDC	QC:CM	APP.:	Date: 15-10-2025

LUNDSBY RENEWABLE SOLUTIONS
Lundsby Biogas A/S, Hjarbækvej 65, 8831 Løgstrup
Tlf.: +45 96 49 43 00 Info@lundsbybiogas.dk
Denne tegning er underlagt copywrite op må ikke reproduceres unden tilladelse fra Lundsbybiogas A/S

FORMAT: A1

LB-building

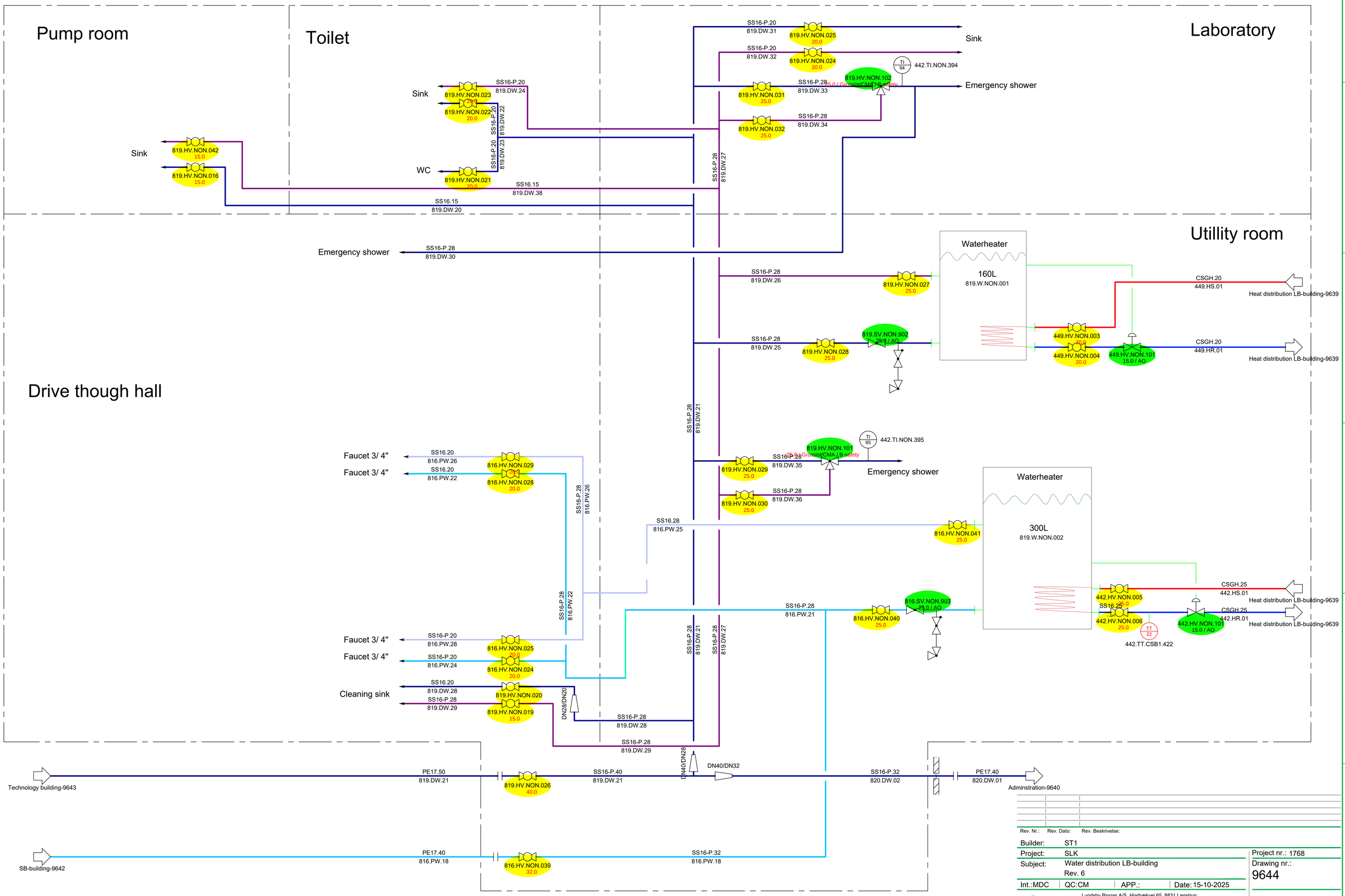

Rev. Nr.:	Rev. Dato:	Rev. Beskrivelse:

Builder:	ST1		
Project:	SLK		Project nr.: 1768
Subject:	Water distribution LB-building Rev. 6		Drawing nr.: 9644
Int.:MDC	QC:CM	APP.:	Date: 15-10-2025

LUNDSBY RENEWABLE SOLUTIONS

Lundsby Biogas A/S, Hjarbækvej 65, 8831 Løgstrup
Tlf.: +45 96 49 43 00 Info@lundsbybiogas.dk

Denne tegning er underlagt copywrite op må ikke reproduceres uden tilladelse fra Lundsbybiogas A/S

FORMAT: A1

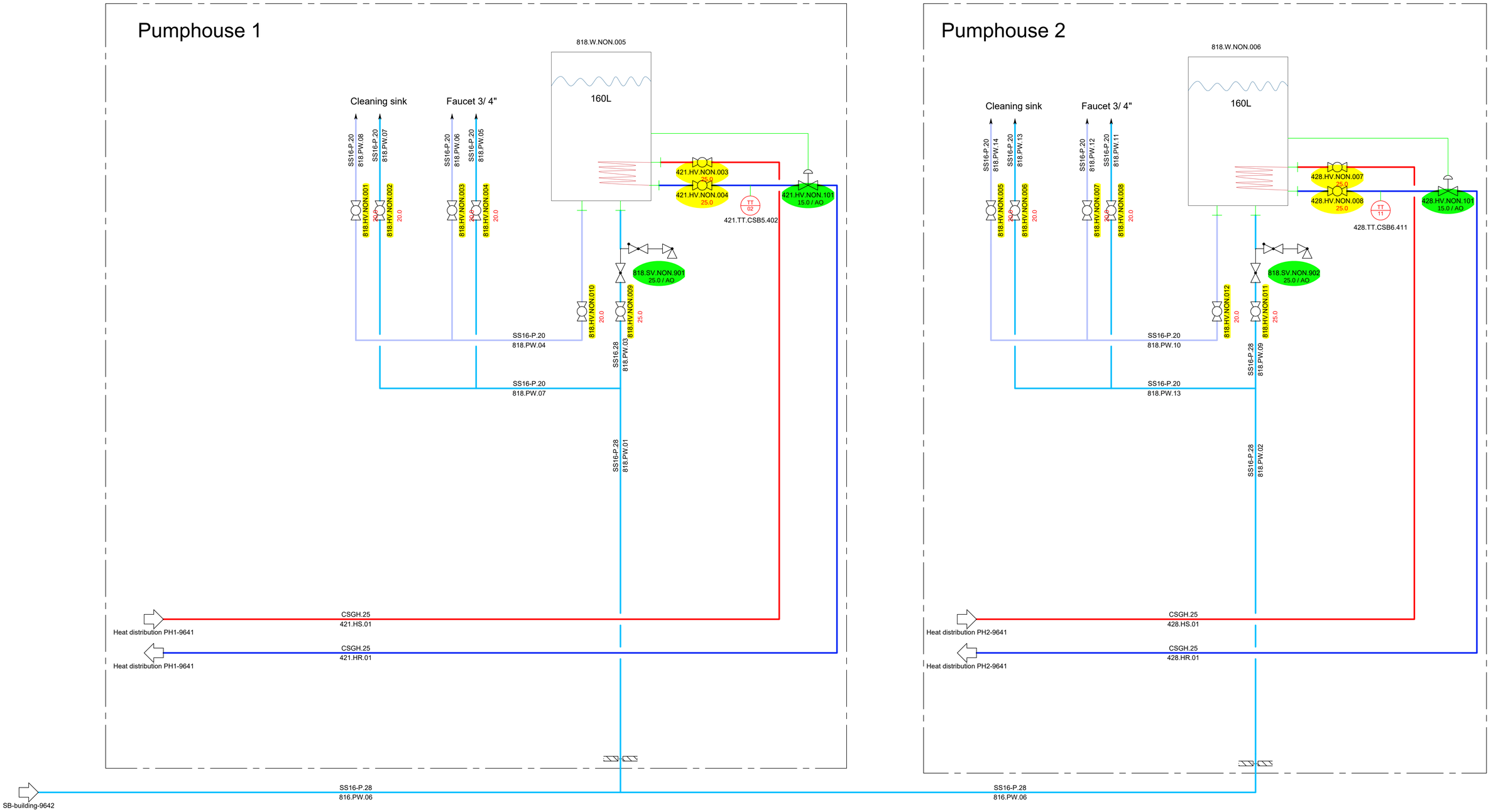

Rev. Nr.:	Rev. Dato:	Rev. Beskrivelse:

Builder: ST1

Project: SLK

Subject: Water distribution pumphouse 1 & 2
Rev. 6

Int.:MDC | QC:CM | APP.: | Date: 15-10-2025

Project nr.: 1768

Drawing nr.: 9645

FORMAT: A1

LUNDSBY RENEWABLE SOLUTIONS
Lundsby Biogas A/S, Hjarbækvej 65, 8831 Løgstrup
Tlf.: +45 96 49 43 00 Info@lundsbybiogas.dk
Denne tegning er underlagt copywrite op må ikke reproduceres uden tilladelse fra Lundsbybiogas A/S

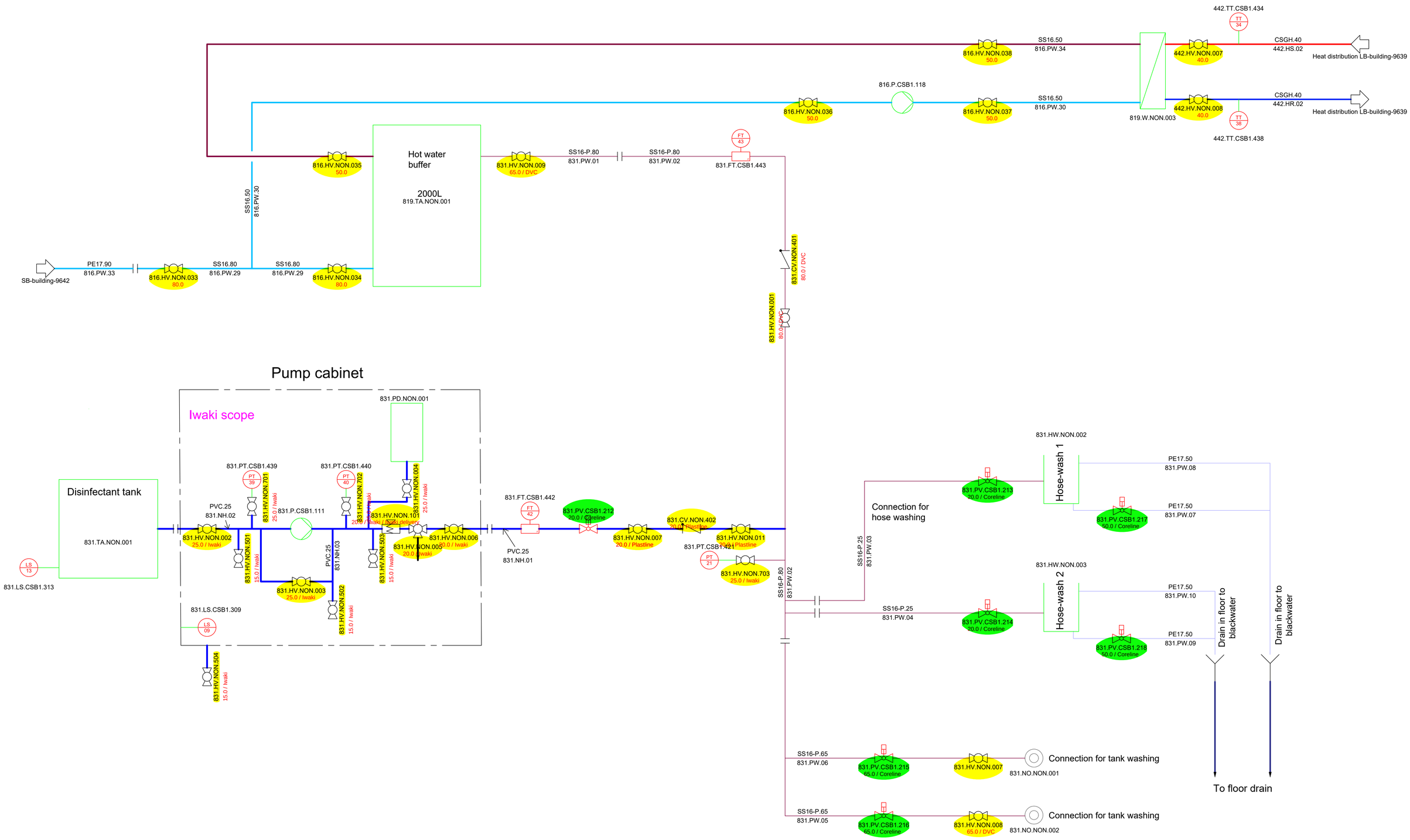

Rev. Nr.:	Rev. Dato:	Rev. Beskrivelse:

Builder: ST1

Project: SLK

Subject: Wash system
Rev. 6

Sags nr.: 1768

Tegn. nr.: 9646

Int.:MDC | QC: CM | APP.: | Date: 15-10-2025

LUNDSBY RENEWABLE SOLUTIONS

Lundsby Biogas A/S, Hjarbækvej 65, 8831 Løgstrup
Tlf.: +45 96 49 43 00 Info@lundsbybiogas.dk

Denne tegning er underlagt copywrite op må ikke reproduceres unden tilladelse fra Lundsbybiogas A/S

FORMAT: A1

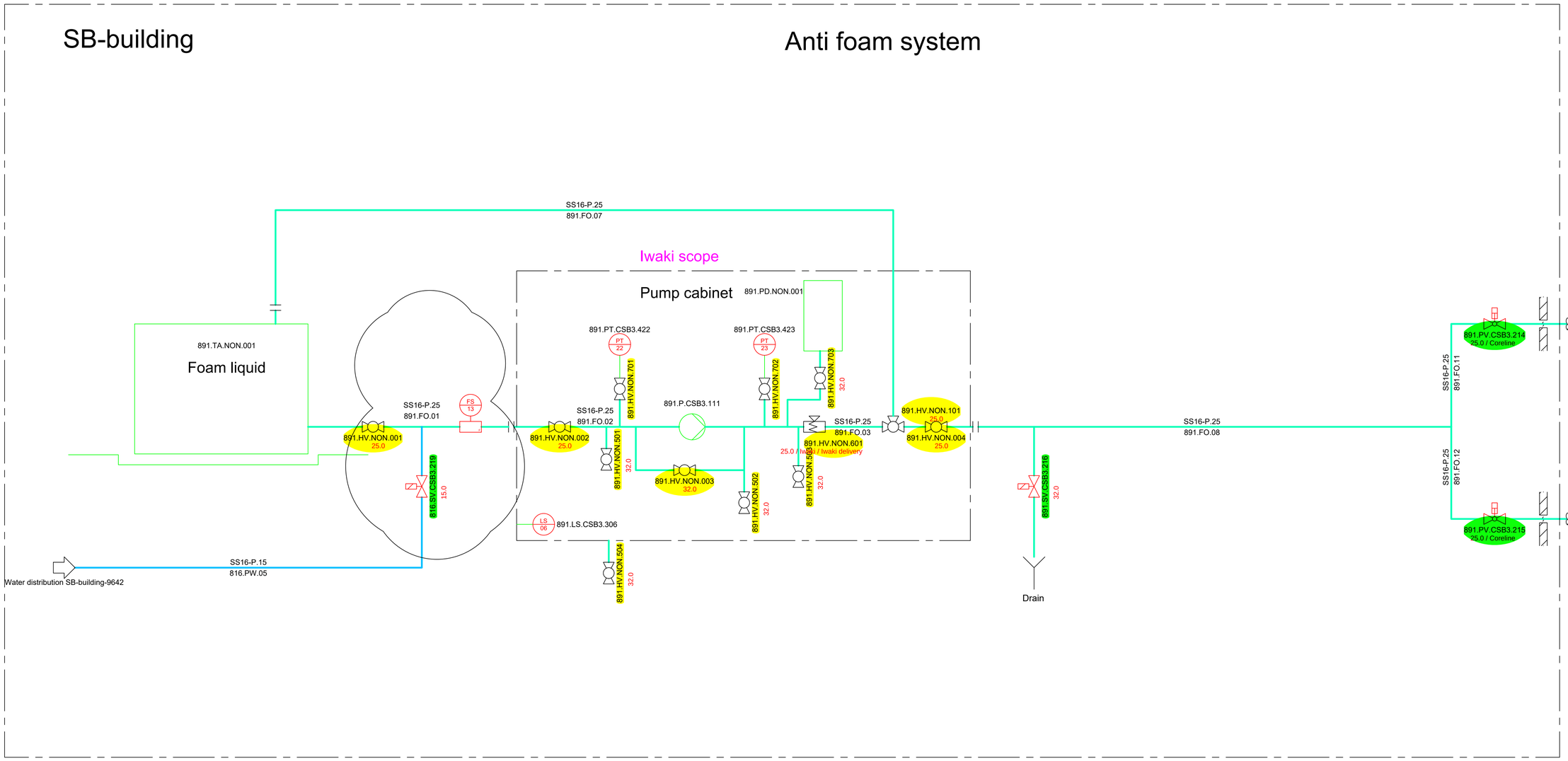

Rev. Nr.:	Rev. Dato:	Rev. Decription:

Builder: ST1

Project: SLK

Subject: Anti foam system
Rev. 6

Int.: MDC | QC.CM | APP.: | Date: 15-10-2025

Project nr..1768

Drawing nr..:
9648

LUNDSBY RENEWABLE SOLUTIONS
Lundsby Renewable Solutions A/S, Hjarbækvej 65, 8831 Løgstrup
Tlf.: +45 96 49 43 00 Info@lundsby.dk
This Drawing is subject to copywrite and may not be reproduced without permission from Lundsby Renewable Solutions A/S

FORMAT: A1

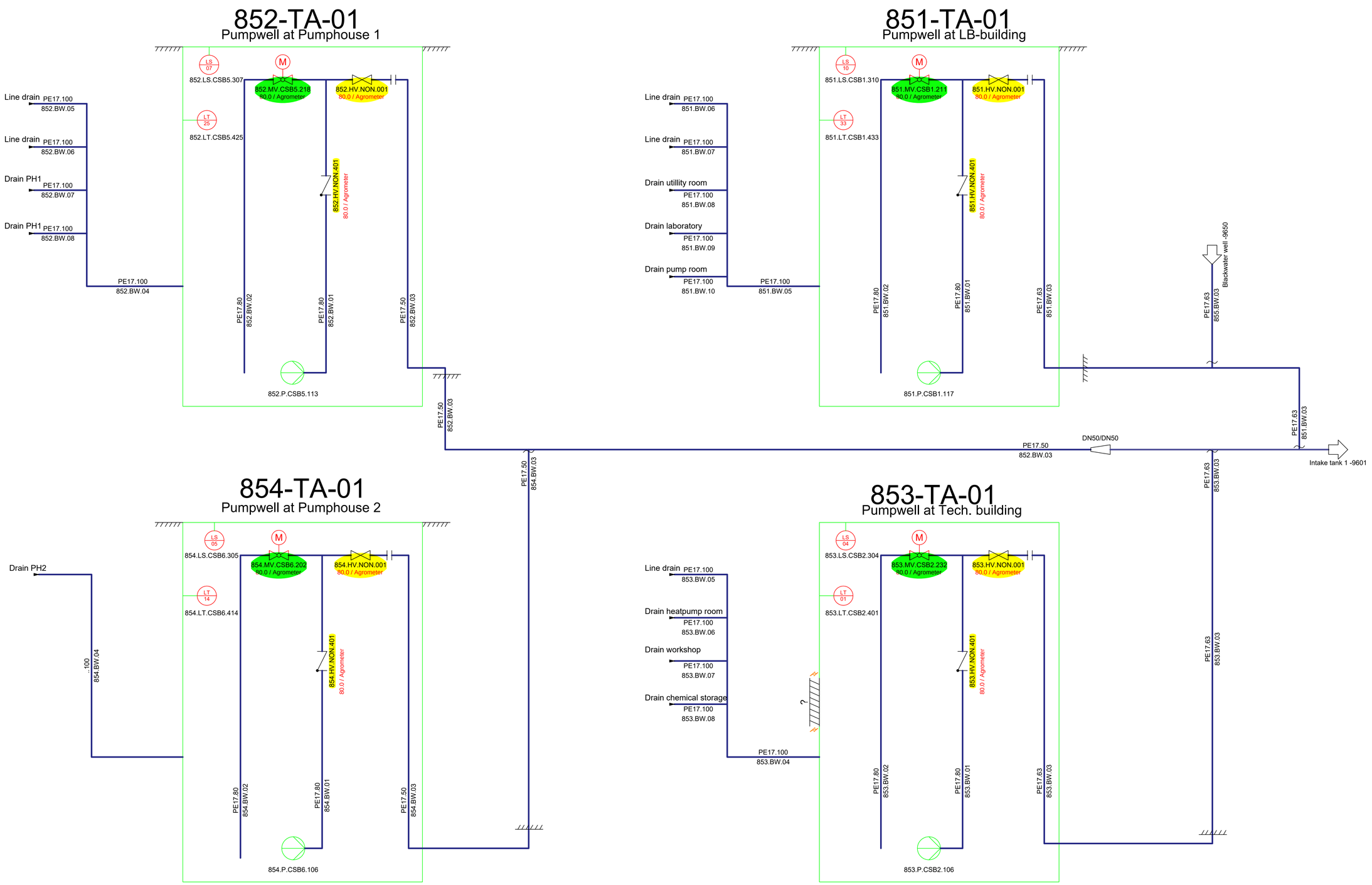

Rev. Nr.:	Rev. Dato:	Rev. Decription:

Builder:	ST1		
Project:	SLK		Project nr..:1768
Subject:	Blackwater wells Rev. 6		Drawing nr..: 9649
Int.: MDC	QC.CM	APP.:	Date: 15-10-2025

LUNDSBY RENEWABLE SOLUTIONS

Lundsby Renewable Solutions A/S, Hjarbækvej 65, 8831 Løgstrup
Tlf.: +45 96 49 43 00 Info@lundsby.dk
This Drawing is subject to copywrite and may not be reproduced without permission from Lundsby Renewable Solutions A/S

FORMAT: A1

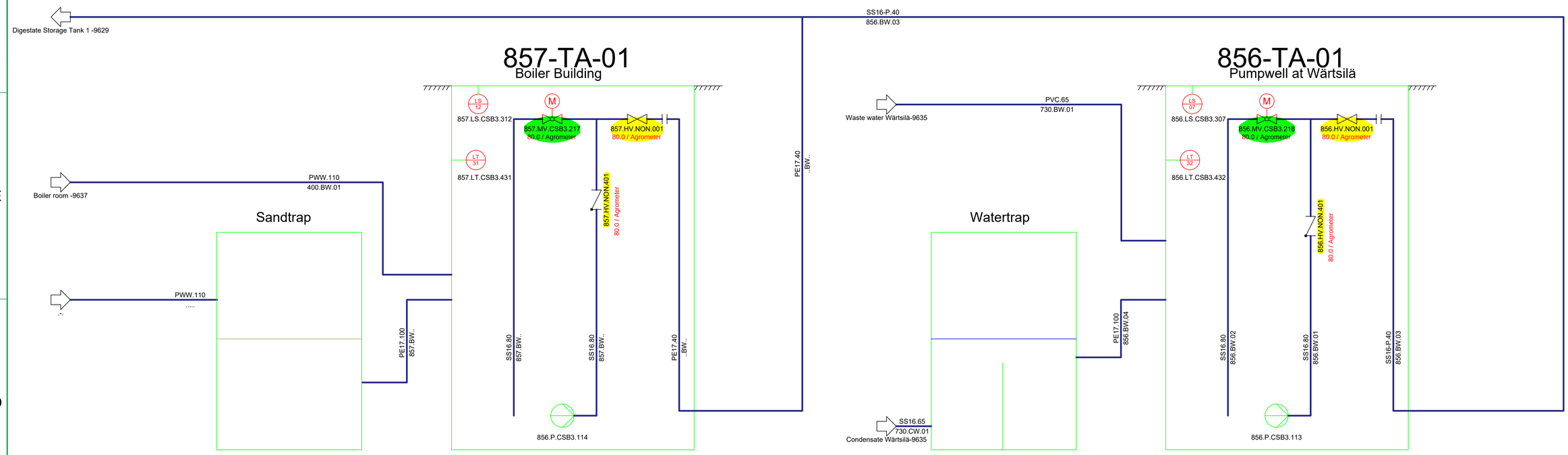

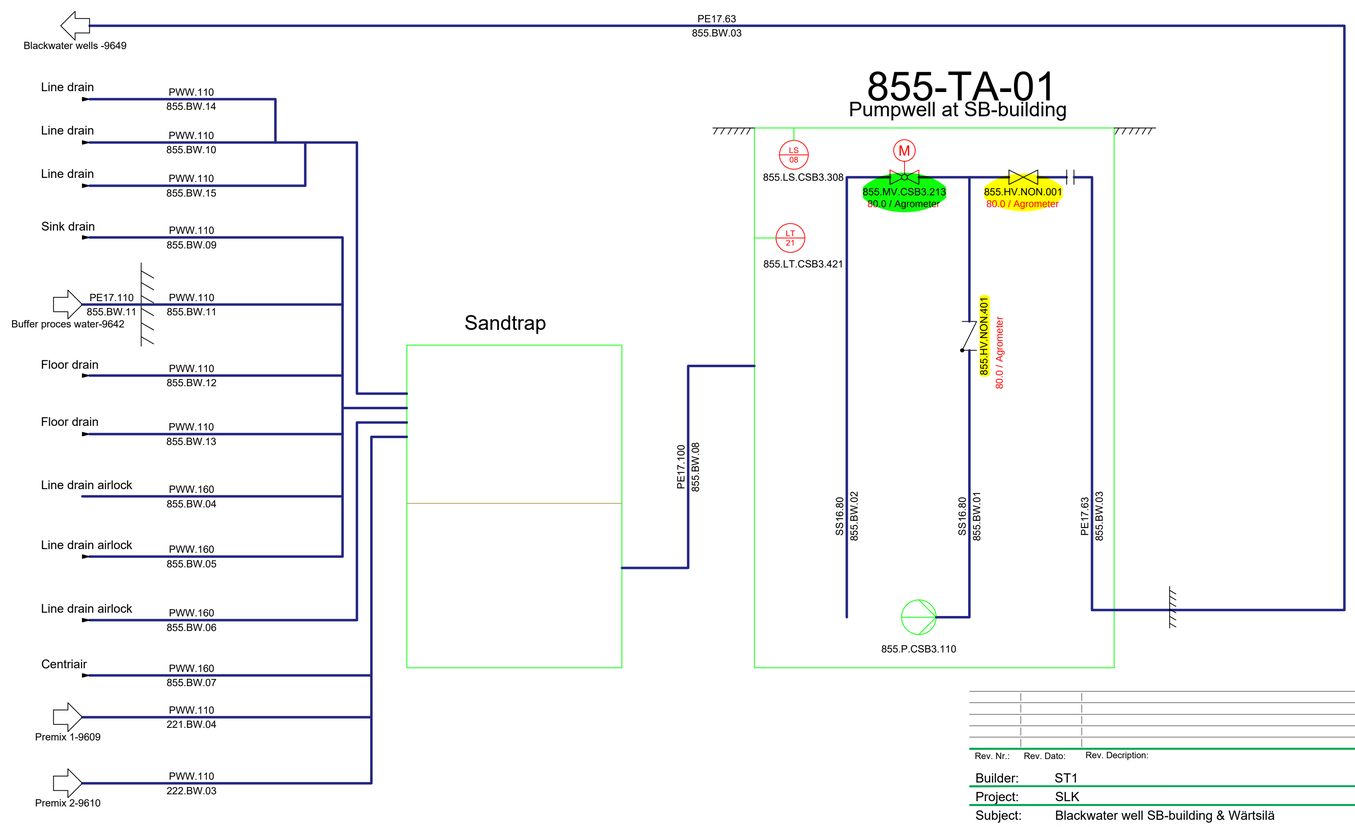

Rev. Nr.:	Rev. Dato:	Rev. Decription:

Builder: ST1

Project: SLK

Subject: Blackwater well SB-building & Wärtsilä
Rev. 6

Int.: MDC | QC.CM | APP.: | Date: 15-10-2025

Project nr..: 1768

Drawing nr..:
9650

FORMAT: A1

LUNDSBY RENEWABLE SOLUTIONS
Lundsby Renewable Solutions A/S, Hjarbækvej 65, 8831 Løgstrup
Tlf.: +45 96 49 43 00 Info@lundsby.dk
This Drawing is subject to copywrite and may not be reproduced without permission from Lundsby Renewable Solutions A/S

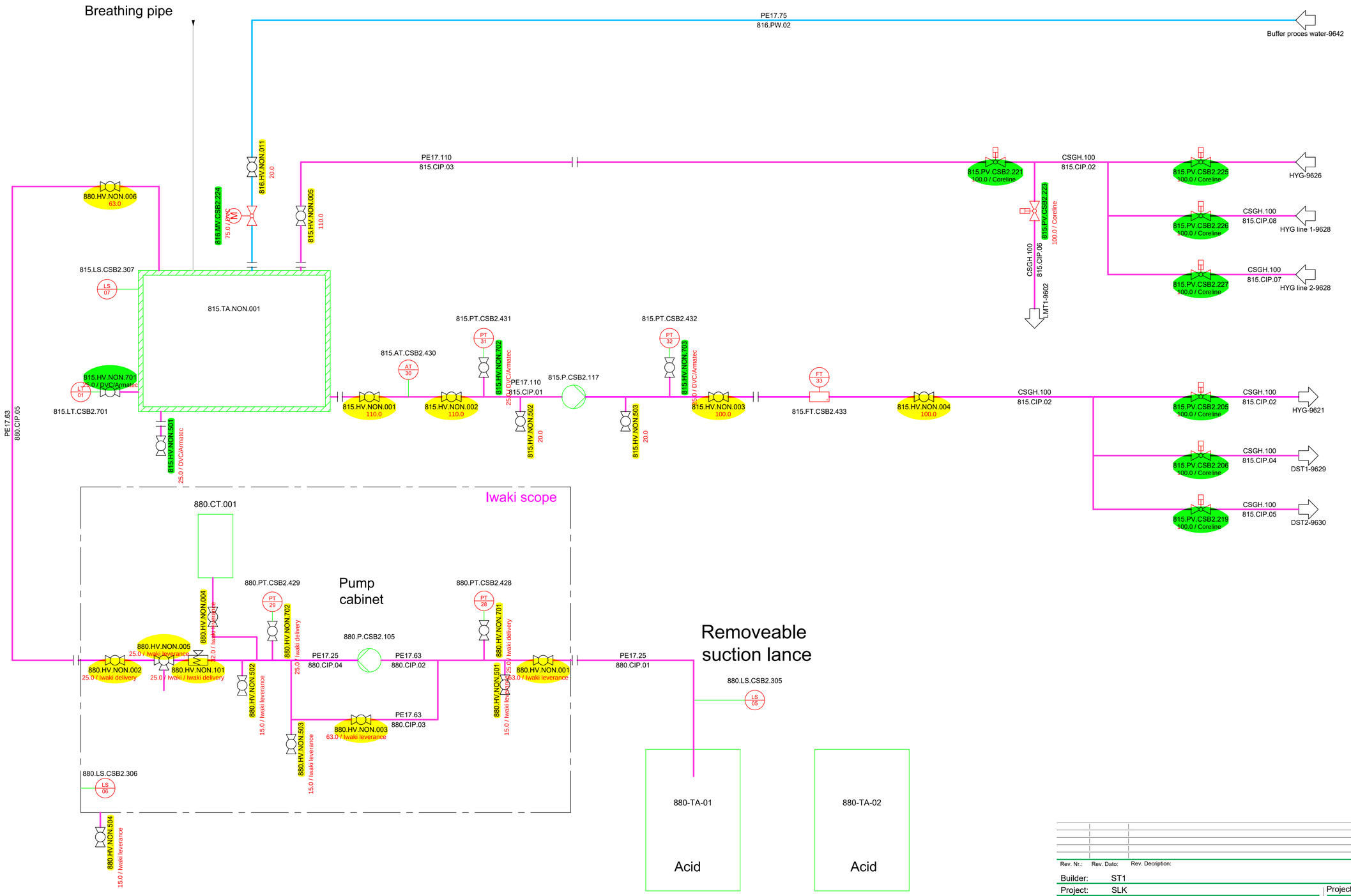

Rev. Nr.:	Rev. Dato:	Rev. Decription:

Builder: ST1

Project: SLK

Subject: CIP facility
Rev. 6

Project nr..:1768

Drawing nr..:
9651

Int.: MDC | QC.CM | APP.: | Date: 15-10-2025

LUNDSBY RENEWABLE SOLUTIONS

Lundsby Renewable Solutions A/S, Hjarbækvej 65, 8831 Løgstrup
Tlf.: +45 96 49 43 00 Info@lundsby.dk
This Drawing is subject to copywrite and may not be reproduced without permission from Lundsby Renewable Solutions A/S

FORMAT: A1

Pumphouse 1
JA Trykluft scope

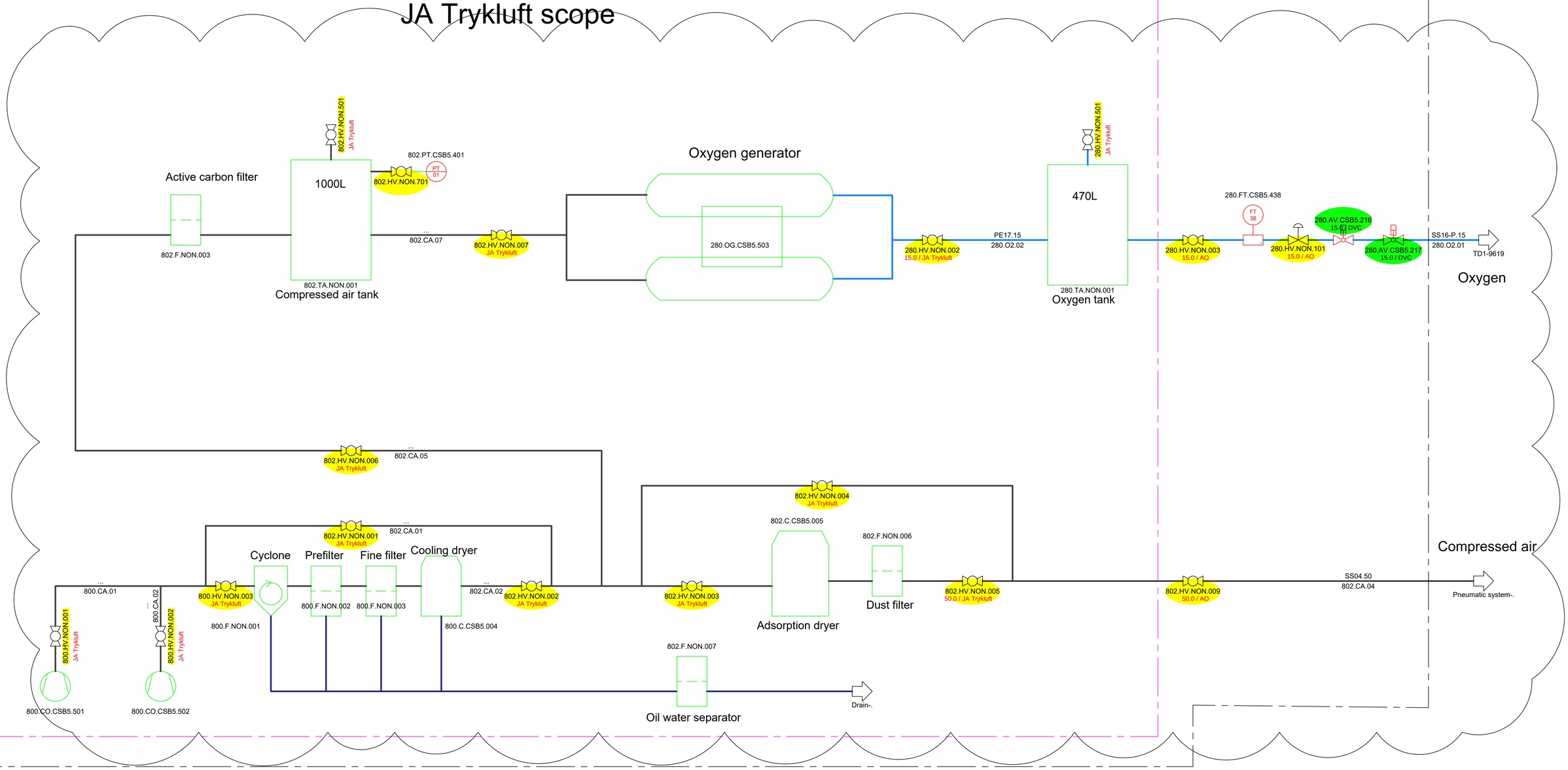

Rev. Nr.:	Rev. Dato:	Rev. Decription:

Builder: ST1
Project: SLK
Subject: Compressed air & Oxygen
Rev. 6

Int.: MDC | QC.CM | APP.: | Date: 15-10-2025

Project nr..: 1768
Drawing nr..: 9652

LUNDSBY RENEWABLE SOLUTIONS
Lundsby Renewable Solutions A/S, Hjarbækvej 65, 8831 Løgstrup
Tlf.: +45 96 49 43 00 Info@lundsby.dk
This Drawing is subject to copywrite and may not be reproduced without permission from Lundsby Renewable Solutions A/S

FORMAT: A1

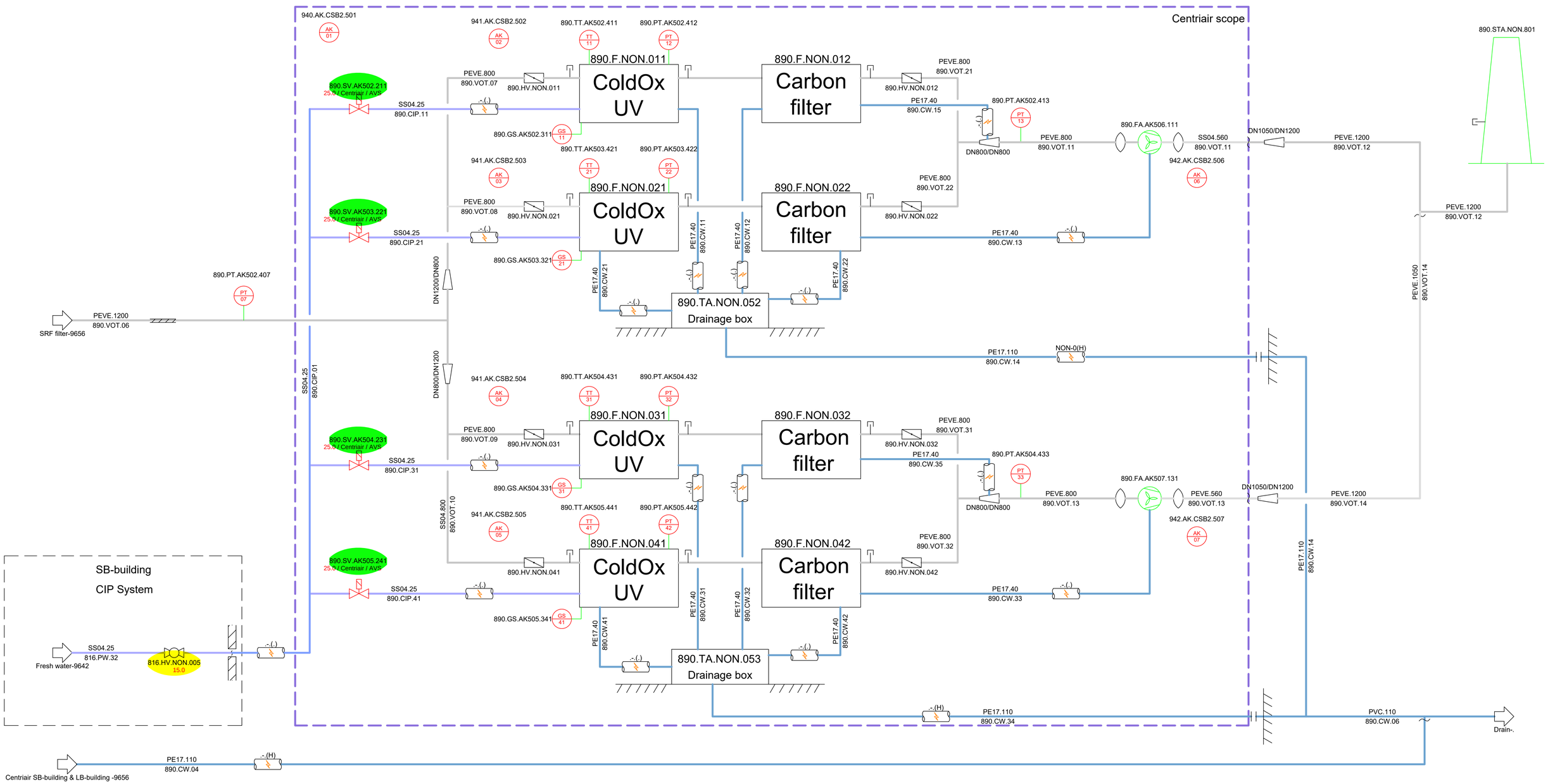

Rev. Nr.:	Rev. Dato:	Rev. Decription:

Builder:	ST1		
Project:	SLK		Project nr..1768
Subject:	Centriair ColdOx system Rev. 6		Drawing nr..: 9655
Int.: MDC	QC.CM	APP.:	Date: 15-10-2025

LUNDSBY RENEWABLE SOLUTIONS

Lundsby Renewable Solutions A/S, Hjarbækvej 65, 8831 Løgstrup
Tlf.: +45 96 49 43 00 Info@lundsby.dk
This Drawing is subject to copywrite and may not be reproduced without permission from Lundsby Renewable Solutions A/S

FORMAT: A1

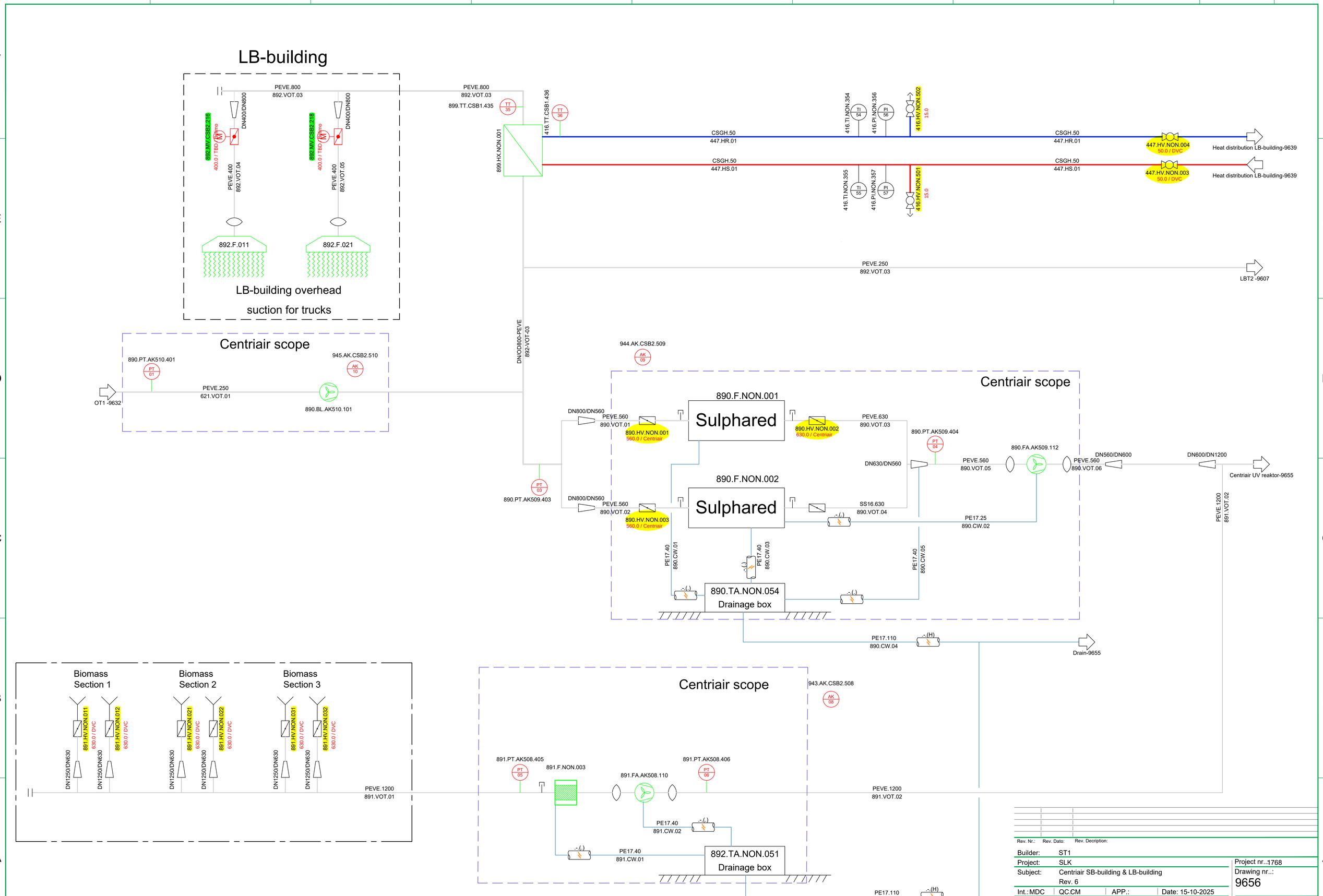

Rev. Nr.:	Rev. Dato:	Rev. Decription:

Builder:	ST1		
Project:	SLK		Project nr..1768
Subject:	Centriair SB-building & LB-building Rev. 6		Drawing nr..: 9656
Int.: MDC	QC.CM	APP.:	Date: 15-10-2025

LUNDSBY RENEWABLE SOLUTIONS

Lundsby Renewable Solutions A/S, Hjarbækvej 65, 8831 Løgstrup
Tlf.: +45 96 49 43 00 Info@lundsby.dk
This Drawing is subject to copywrite and may not be reproduced without permission from Lundsby Renewable Solutions A/S

FORMAT: A1

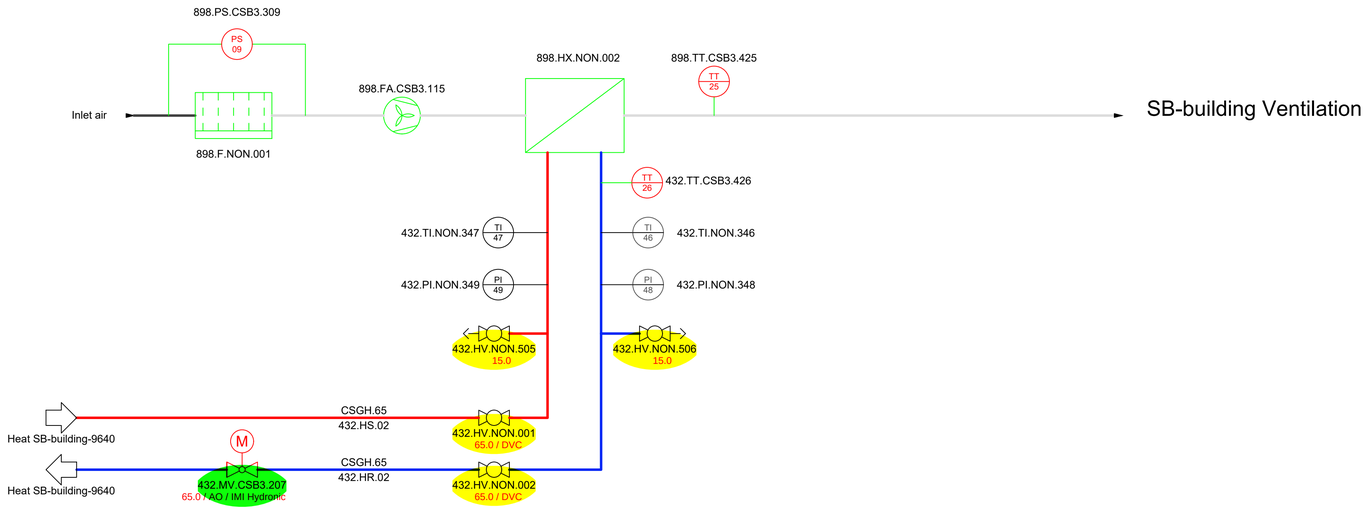

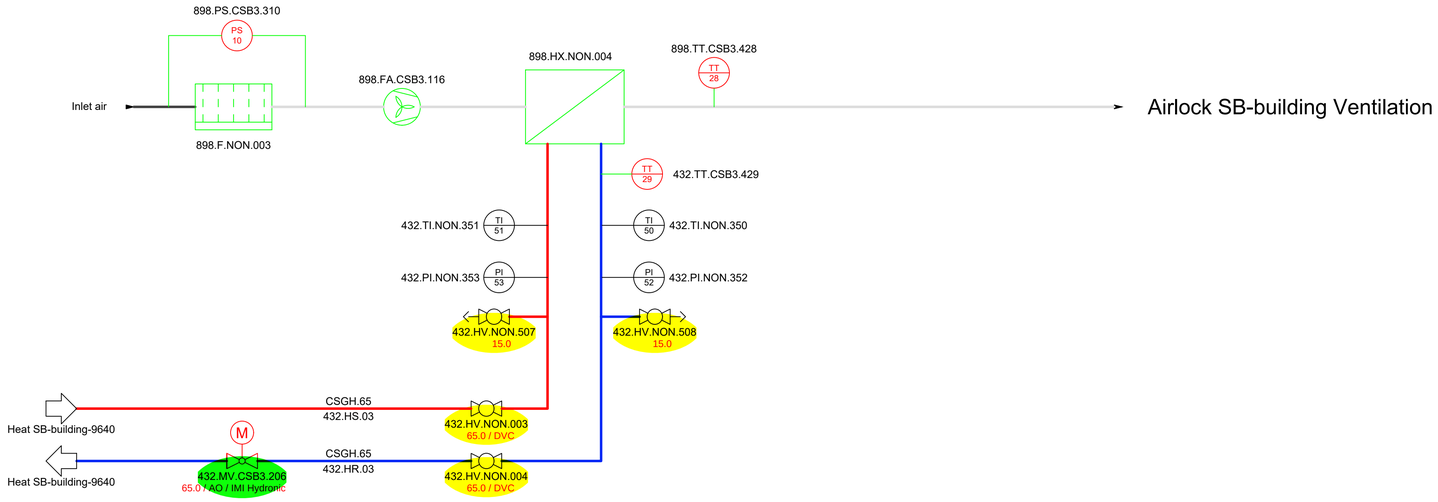

Rev. Nr.:	Rev. Dato:	Rev. Decription:

Builder: ST1

Project: SLK

Subject: Ventilation SB-building
Rev. 6

Int.: MDC | QC.: CM | APP.: | Date: 15-10-2025

Project nr..: 1768

Drawing nr..:
9657

LUNDSBY RENEWABLE SOLUTIONS
Lundsby Renewable Solutions A/S, Hjarbækvej 65, 8831 Løgstrup
Tlf.: +45 96 49 43 00 Info@lundsby.dk
This Drawing is subject to copywrite and may not be reproduced without permission from Lundsby Renewable Solutions A/S

FORMAT: A1