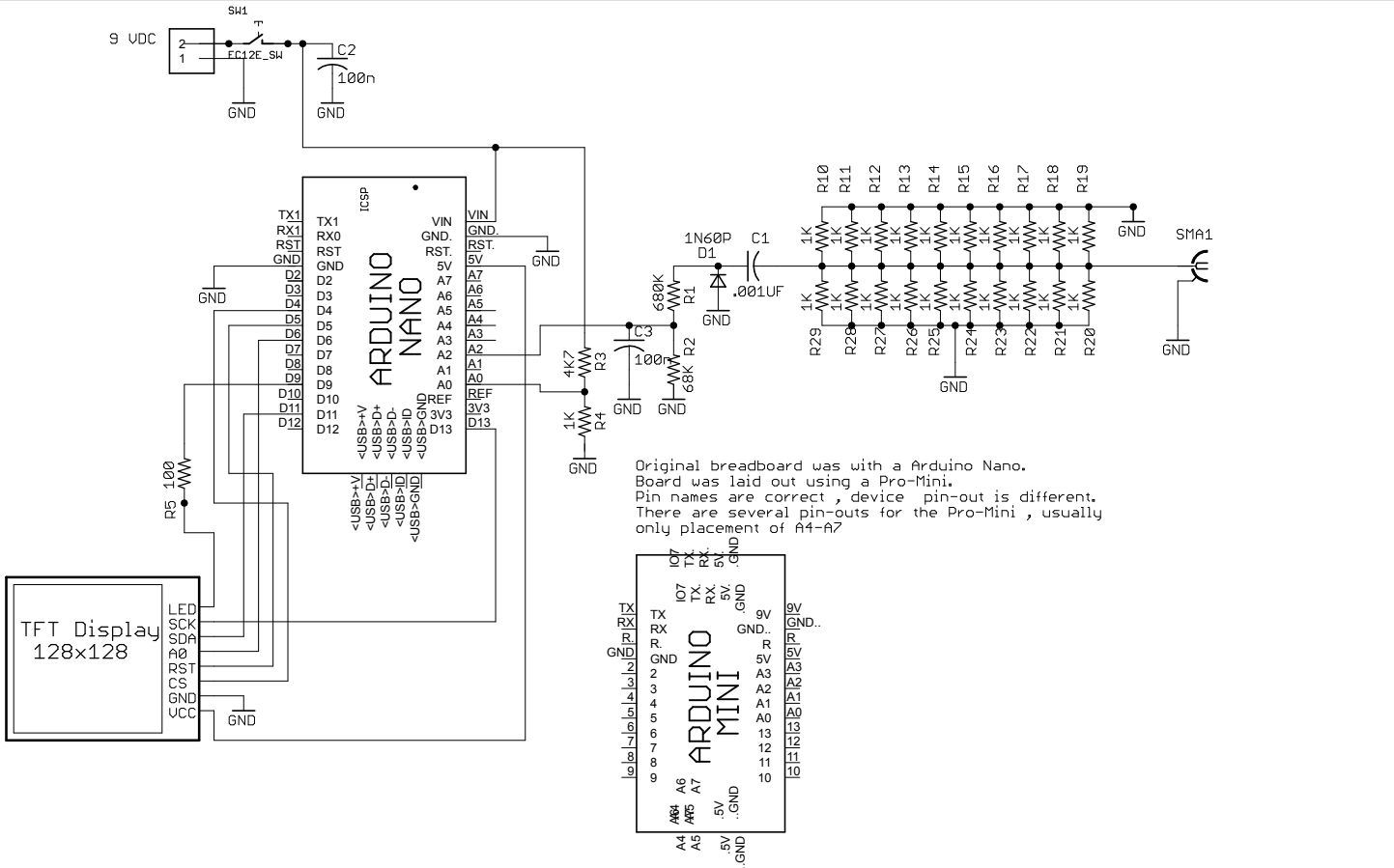

TITLE: KV4QB DL WattMeter

Document Number: REV:

Date: 3/23/2015 6:01:10 PM Sheet: 1/1