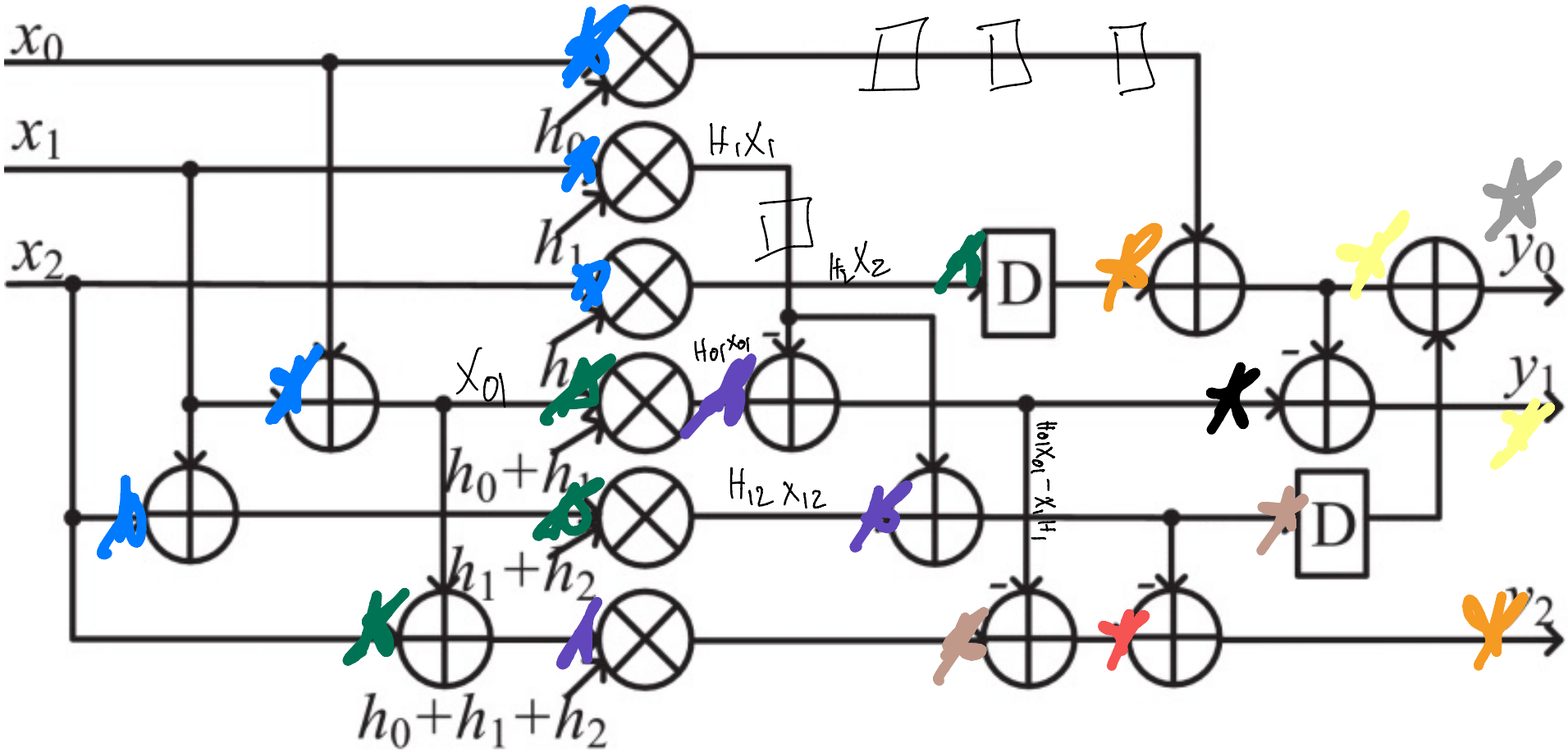

CLOCK STAGES

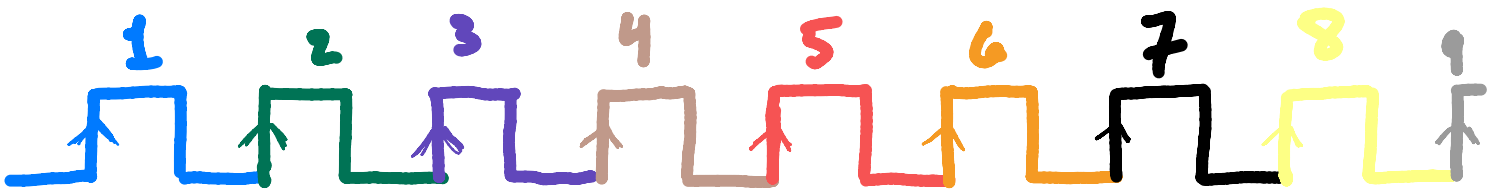

- Assumes each multiply/add op takes one clock cycle
- 8 stage pipeline architecture

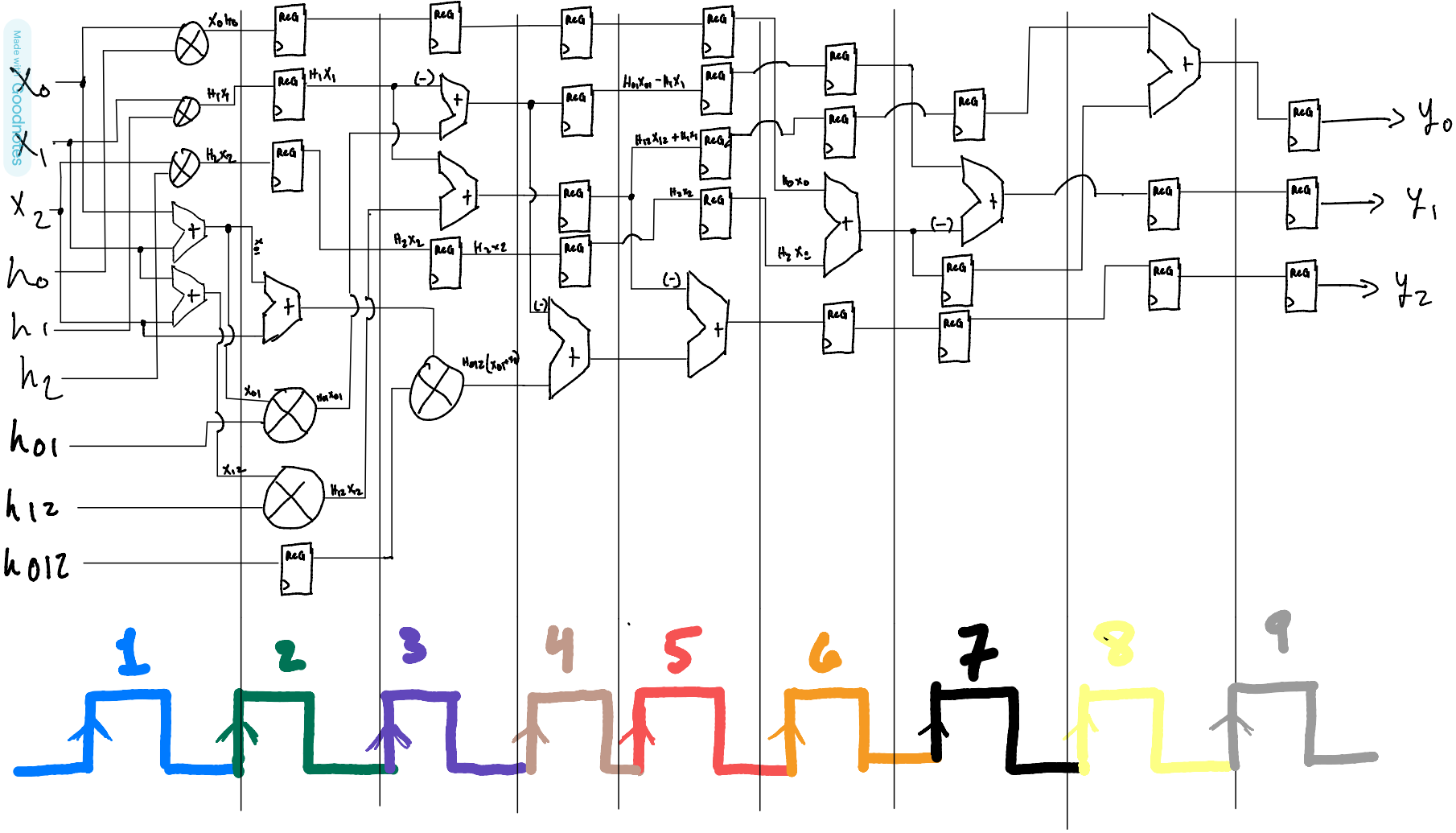

Pipelined Architecture for 3-Parallel Fast Convolution Unit (FCU)