JAYPEE UNIVERSITY OF ENGINEERING & TECHNOLOGY, GUNA

DEPARMENT OF COMPUTER SCIENCE & ENGINEERING

Course: Computer Organization & Architecture Lab

Course Code: CS208/18B17CI474

B. Tech. (CSE IV/VI Sem.)

Experiment # 7

Aim: Design of flip-flops and registers.

A sequential logic circuit is the digital system whose **output depends on its current combination of input values as well as previous values of the output**. All flip-flops, registers, counters are the examples of sequential circuits. Other important features of these circuits are as following:-

- Feedback connections in the circuits.
- Clock signal i.e. time dependent
- Memory elements in the circuit

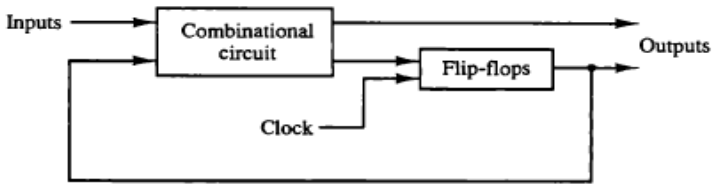

Figure 1: Block diagram of a typical sequential logic circuit

Flip-flops: These are the most elementary building blocks of sequential logic circuit which can store single bit binary data at a time. This name comes from the ability to 'flip' or 'flop' between two stable states either 1 or 0. There are four basic types of flip-flops i.e. SR, JK, T, and D. Out of these, D flip-flop is most commonly used in the design of various sequential circuits.

Flip-flops with their Truth Tables

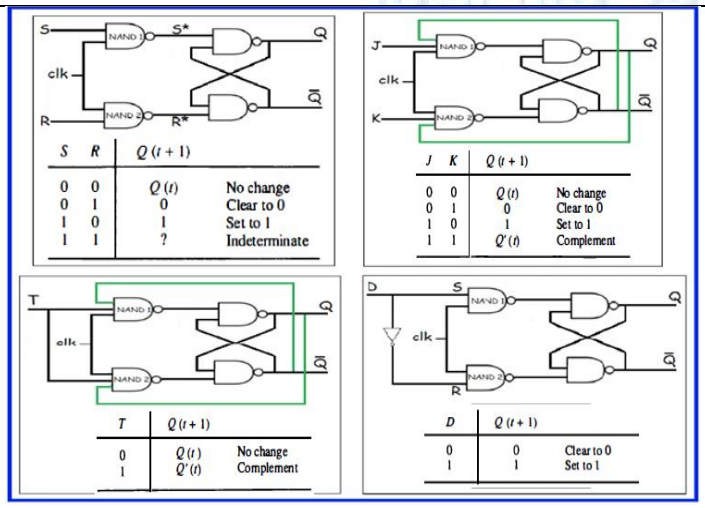

Excitation Tables

SR flip-flop

Q(t)	Q(t + 1)	S	R
0	0	0	x
0	1	1	0
1	0	0	1
1	1	x	0

D flip-flop

Q(t)	Q(t + 1)	D
0	0	0
0	1	1
1	0	0
1	1	1

JK flip-flop

Q(t)	Q(t + 1)	J	K
0	0	0	x
0	1	1	x
1	0	x	1
1	1	x	0

T flip-flop

Q(t)	Q(t + 1)	T
0	0	0
0	1	1
1	0	1
1	1	0

Registers: These are the group of flip-flops. Its basic function is to hold and shift the information within a digital system so as to make it available to the logic units during the computing process. This sequential device loads the data present on its inputs and then moves or "shifts" it to its output once every clock cycle, hence the name **Shift Register**. Data bits may be fed in or out of a shift register serially (SISO: serial in serial out), that is one after the other from either the left or the right direction, or all together at the same time in a parallel configuration (PIPO: parallel in parallel out) as shown in Figure 2. A shift register basically consists of several single bit flip-flops, one for each data bit, connected together.

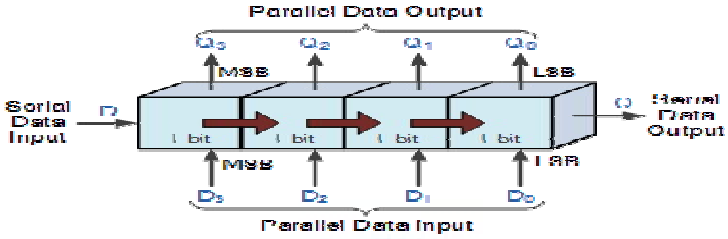

Figure 2: Four configurations (SISO, SIPO, PIPO, and PISO) of a shift register.

Exercise#1: Design D flip-flops with Enable, Clear and Preset control lines as shown in Fig.3. Verify the designs with given truth table and in-blocks of flip-flop.

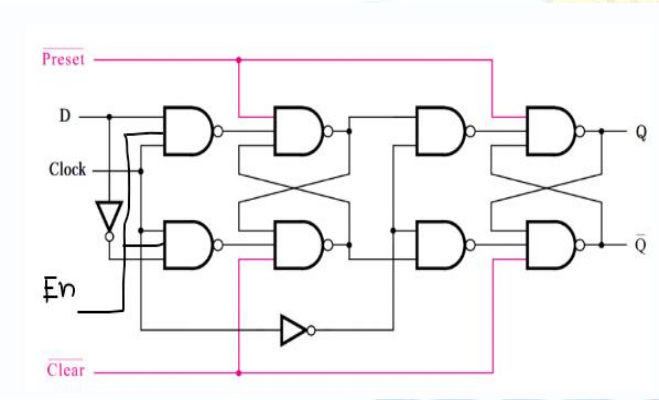

En	Preset	Clear	Clock	D	Q
0	x	x	x	x	N.C.
1	1	0	x	x	1
1	0	1	x	x	0
1	0	0	0	0	N.C
1	0	0	0	1	N.C
1	0	0	1	1	1
1	0	0	1	0	0

N.C. = No Change

Figure 3: Logic diagram of D Flip flop

Exercise#2: Design and verify 4-bit SISO shift register (without in-built block) as using D flip-flops as sub-circuit. Also use preset and enable control lines in the design.

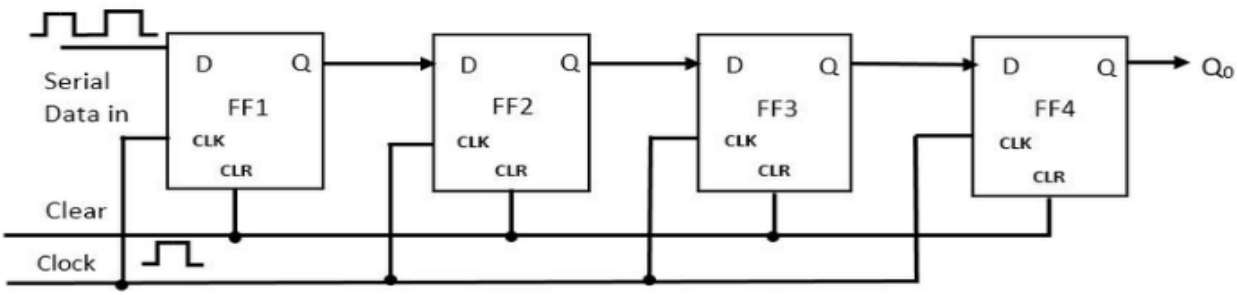

Figure 4: Block diagram of 4-bit SISO register

Exercise#3: Design and verify 4-bit SIPO shift using in built blocks of D flip-flops as sub-circuit. Use all control lines of flip flop in the design.

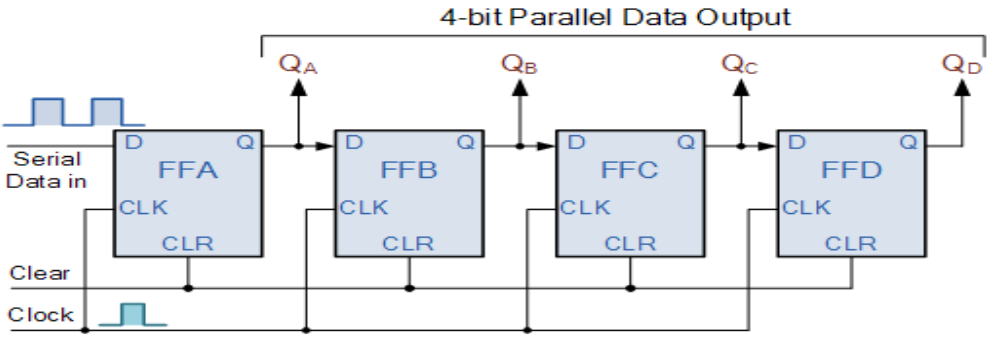

Figure 5: Block diagram of 4-bit SIPO register

Exercise#4: Design and verify 4-bit bidirectional shift register using in built blocks of D flip-flops as sub-circuit. Use all control lines of flip flop in the design.

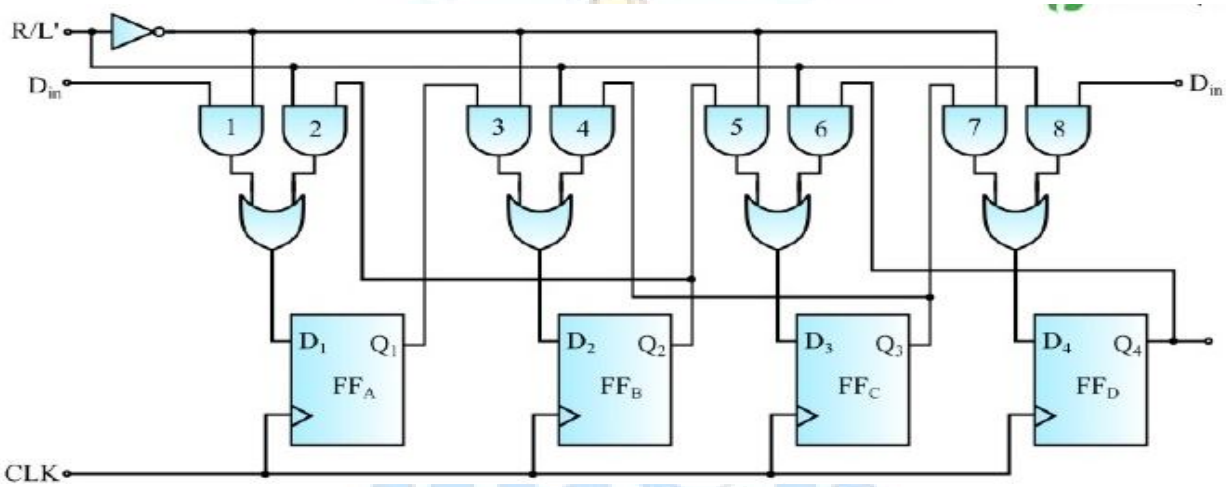

Figure 6: Block diagram of 4-bit bidirectional shift register