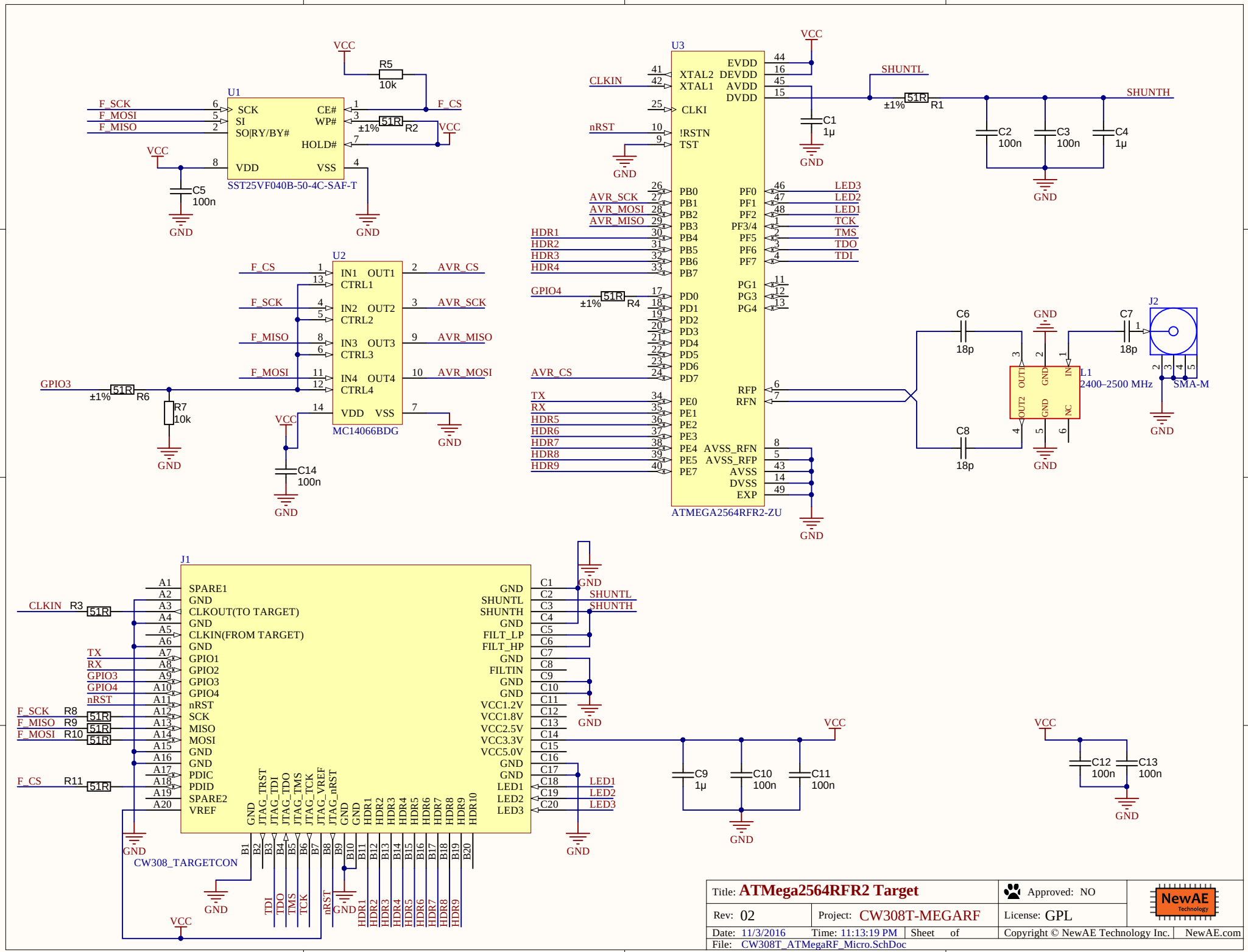

Title: **ATMega2564RFR2 Target**		Approved: NO	NewAE Technology
Rev: 02	Project: CW308T-MEGARF	License: GPL	
Date: 11/3/2016	Time: 11:13:19 PM	Sheet of	Copyright © NewAE Technology Inc. NewAE.com
File: CW308T_ATMegaRF_Micro.SchDoc			