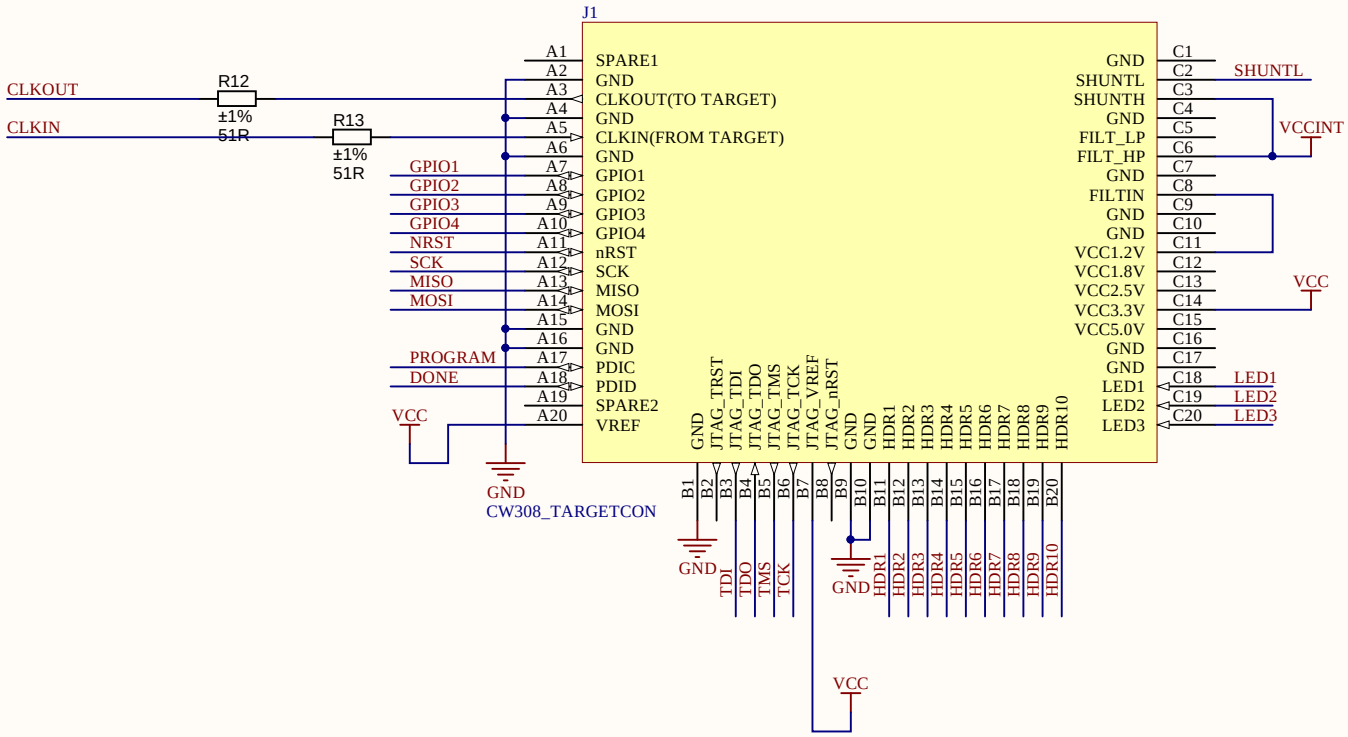

Title: **CW308 Connections**		Approved: NO	NewAE Technology
Rev: 01	Project: CW308T-S6LX9	License: GPL	
Date: 9/24/2016	Time: 10:02:12 AM	Sheet1 of 3	Copyright © NewAE Technology Inc. NewAE.com
File: CW308T_S6LX9_Connector.SchDoc			

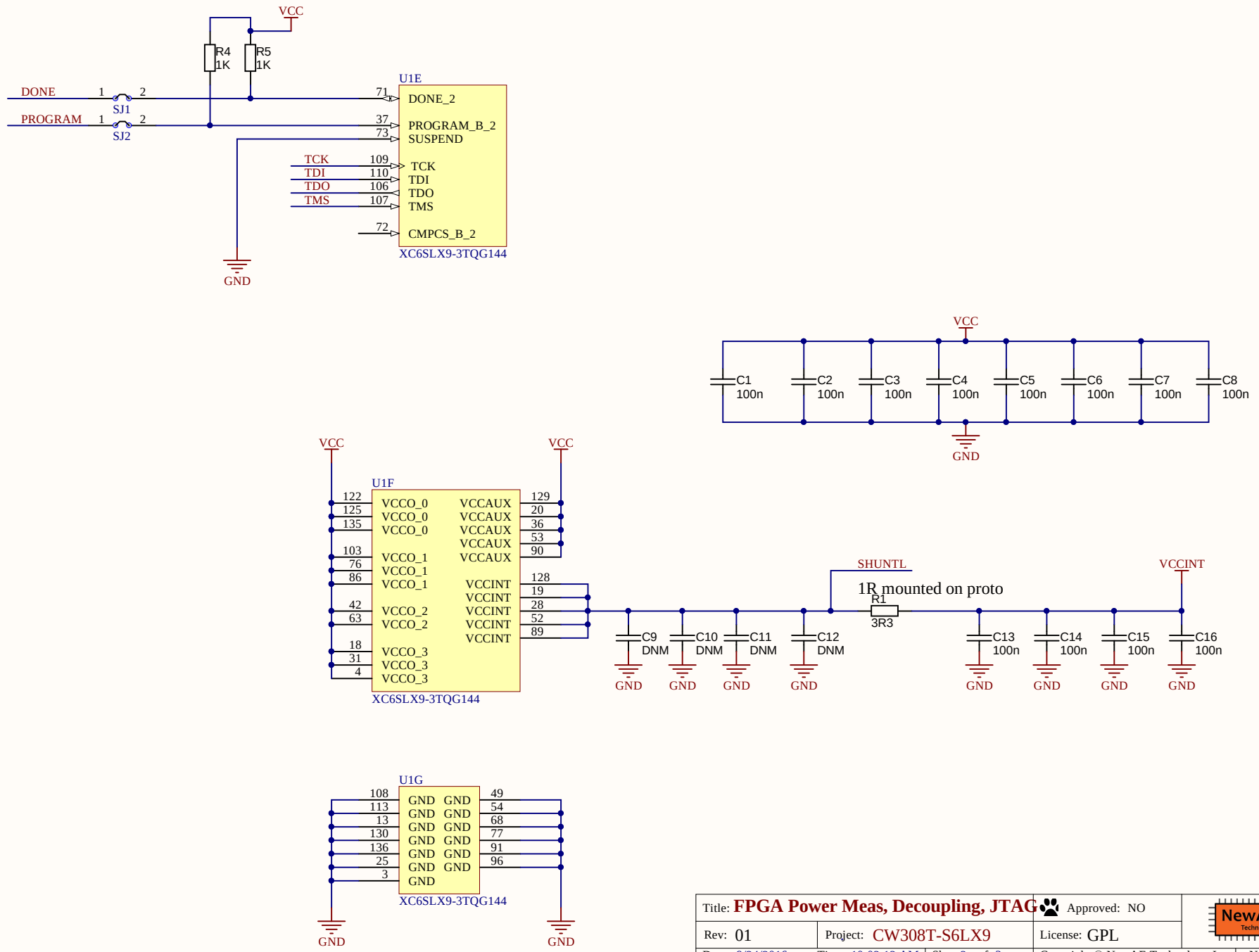

Title: **FPGA Power Meas, Decoupling, JTAG**		Approved: NO	NewAE Technology
Rev: 01	Project: CW308T-S6LX9	License: GPL	
Date: 9/24/2016	Time: 10:02:12 AM	Sheet2 of 3	Copyright © NewAE Technology Inc. NewAE.com
File: CW308T_S6LX9_FPGAMisc.SchDoc			

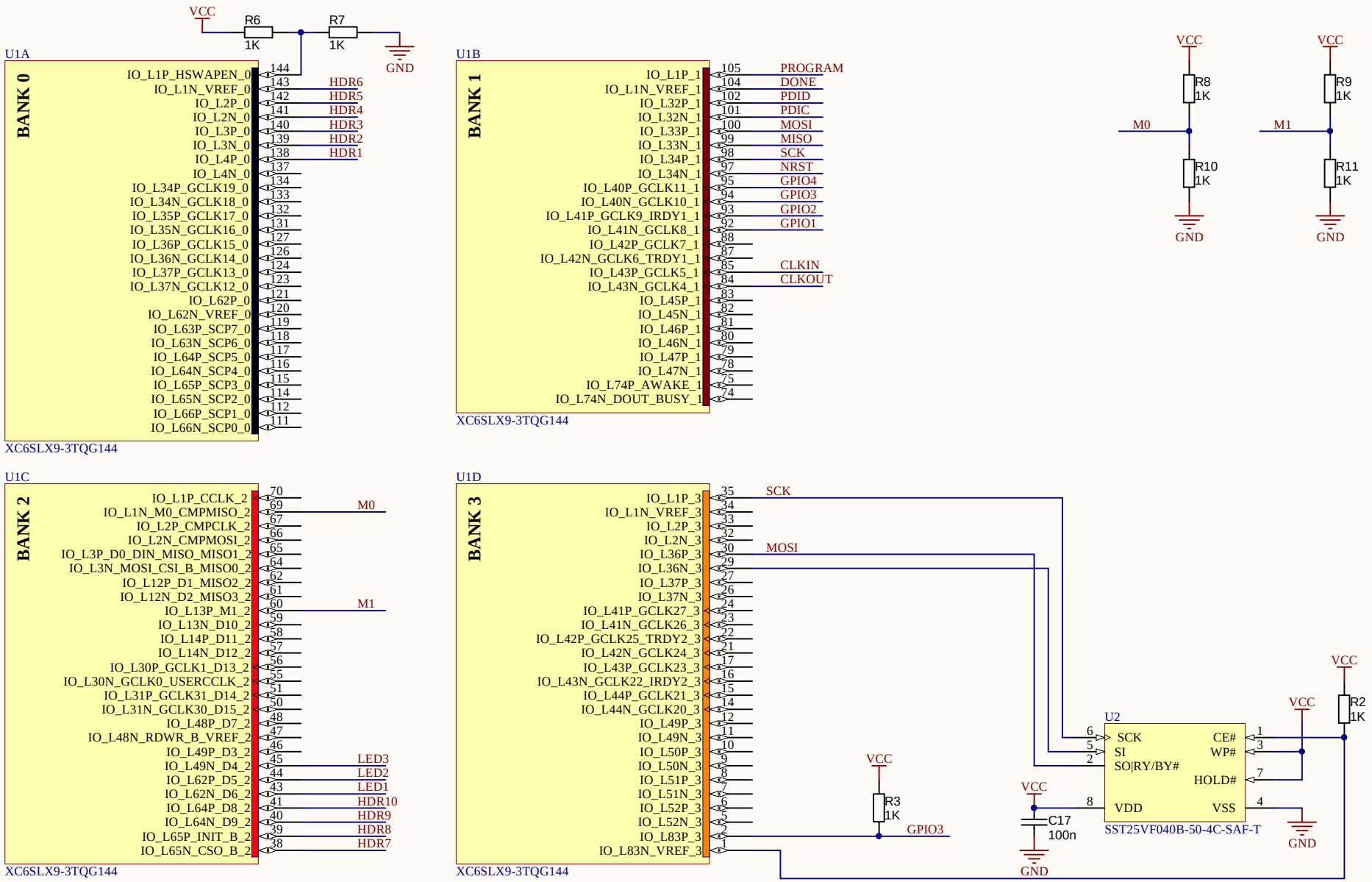

Title: **FPGA I/O Pins, Configuration**		Approved: NO	NewAE Technology
Rev: 01	Project: CW308T-S6LX9	License: GPL	
Date: 9/24/2016	Time: 10:02:12 AM	Sheet3 of 3	Copyright © NewAE Technology Inc. NewAE.com
File: CW308T_S6LX9_FPGAIO.SchDoc			