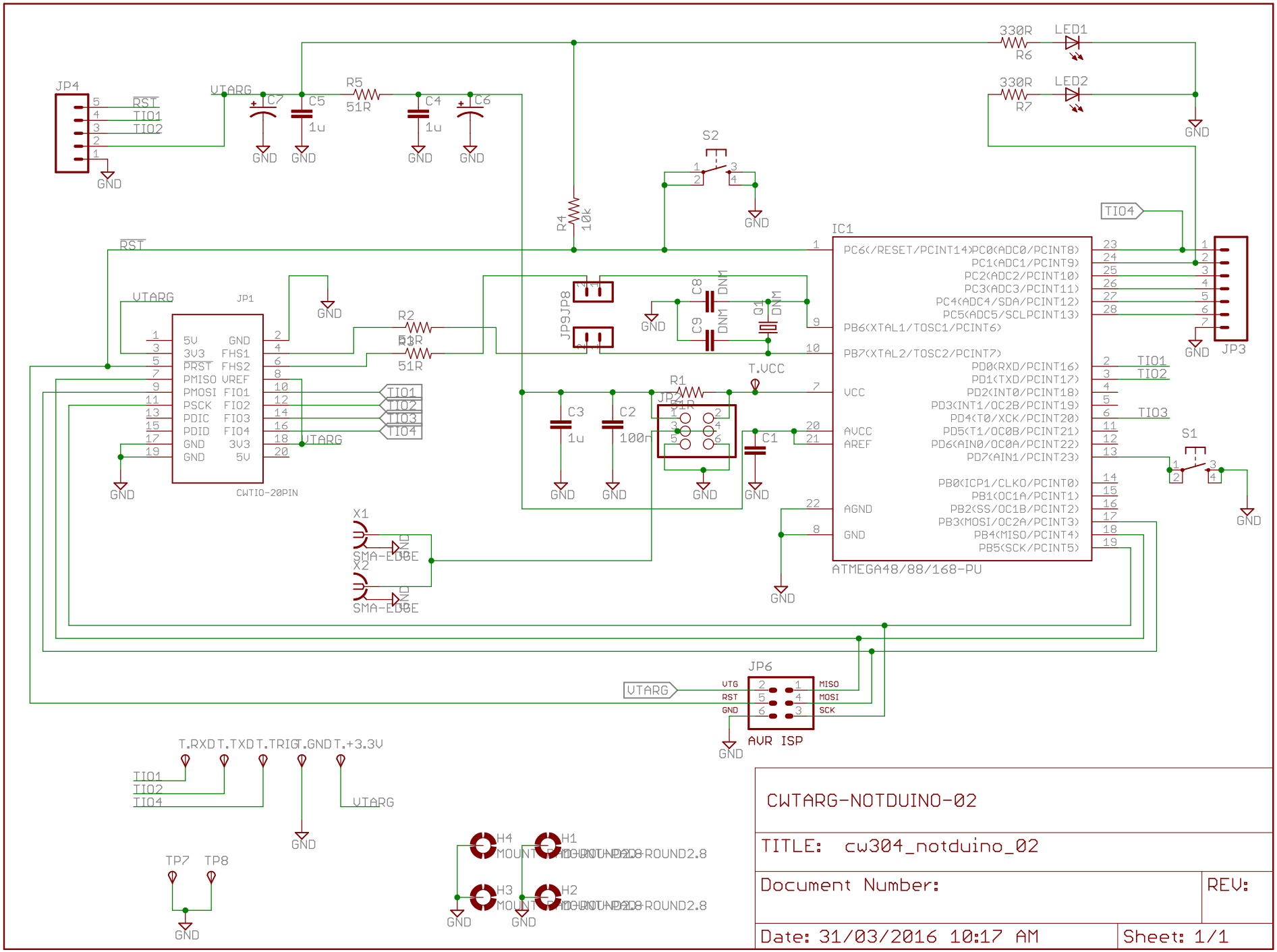

CWTARG-NOTDUINO-02

TITLE: cw304_notduino_02

Document Number:

REV:

Date: 31/03/2016 10:17 AM

Sheet: 1/1