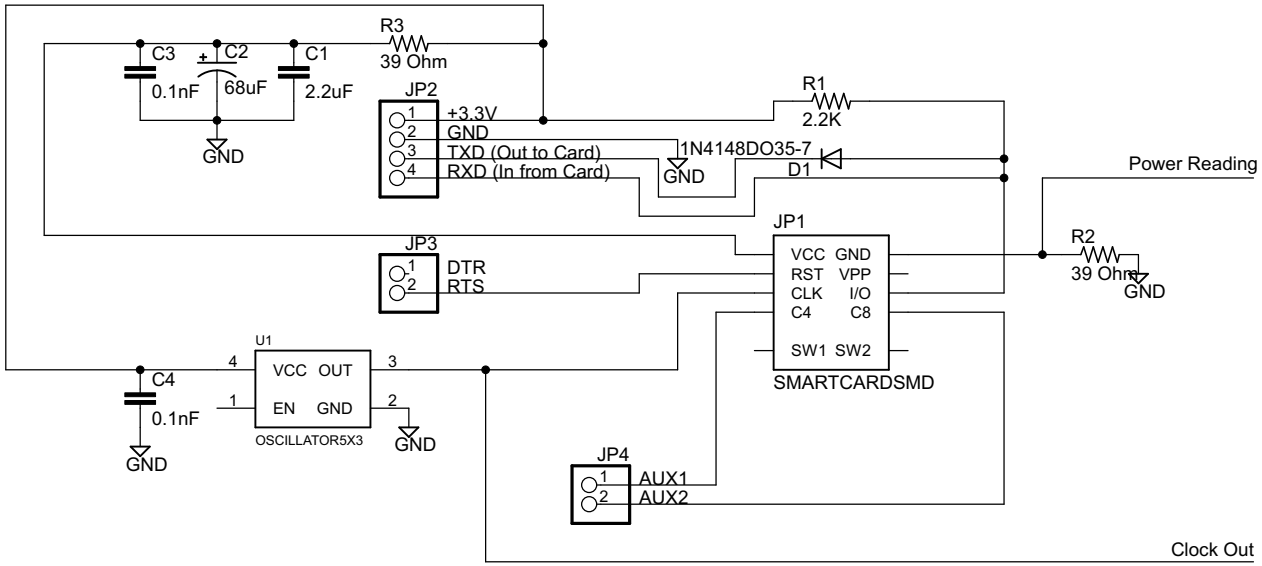

Top View of SmartCard

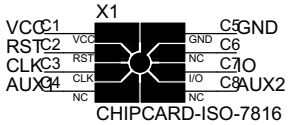

TITLE: scard_serial	
Document Number:	REV:
Date: 04/12/2012 10:25:31 PM	Sheet: 1/1