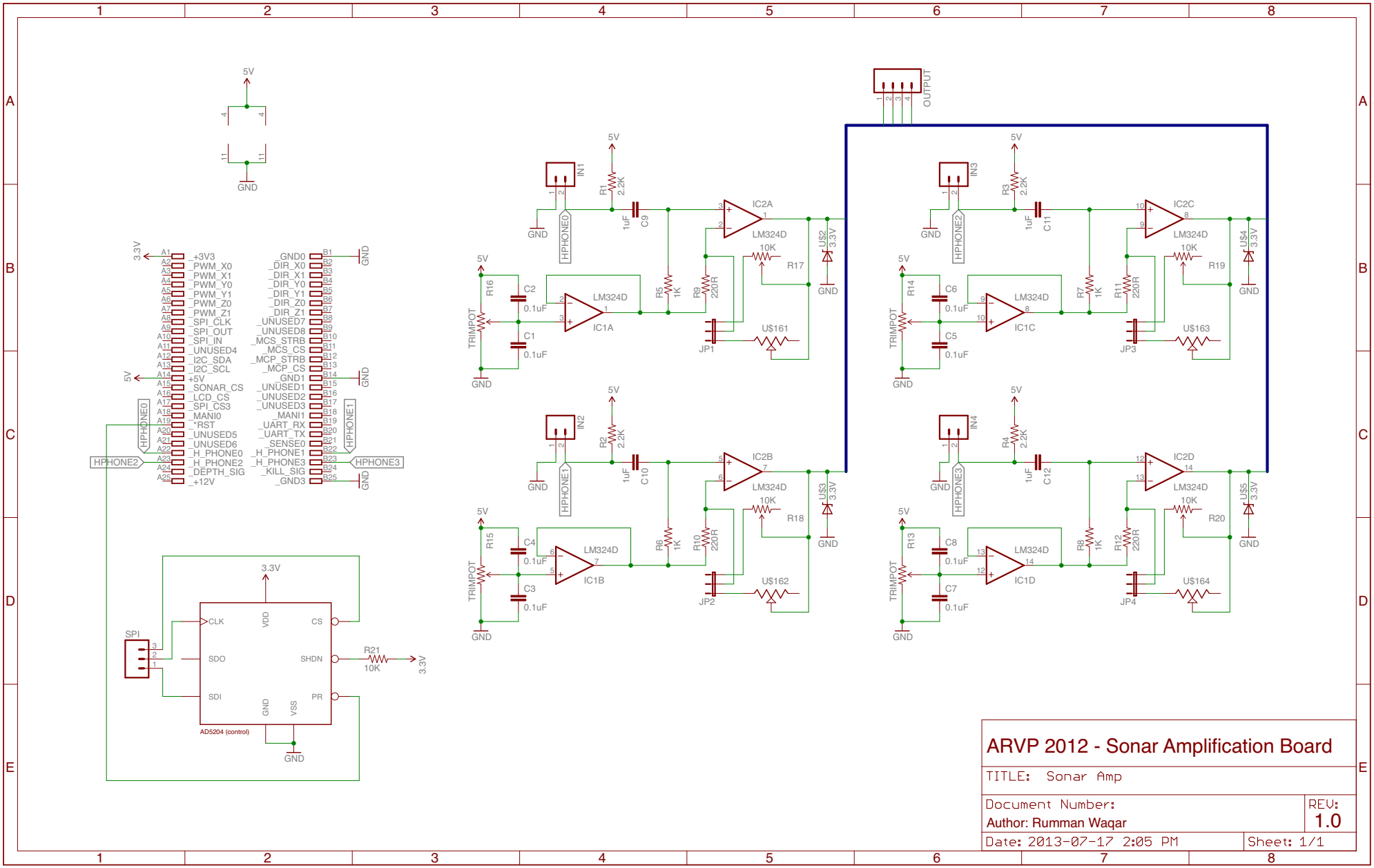
ARVP 2012 - Sonar Amplification Board
TITLE: Sonar Amp
Document Number:
Author: Rumman Waqar
REV: 1.0
Date: 2013-07-17 2:05 PM
Sheet: 1/1
5V
GND
3.3V
OUTPUT
IN1
IN2
IN3
IN4
HPHONE0
HPHONE1
HPHONE2
HPHONE3
IC1A
IC1B
IC1C
IC1D
IC2A
IC2B
IC2C
IC2D
LM324D
TRIMPOT
R1 2.2K
R2 2.2K
R3 2.2K
R4 2.2K
R5 1K
R6 1K
R7 1K
R8 1K
R9 220R
R10 220R
R11 220R
R12 220R
R13
R14
R15
R16
R17 10K
R18 10K
R19 10K
R20 10K
C1 0.1uF
C2 0.1uF
C3 0.1uF
C4 0.1uF
C5 0.1uF
C6 0.1uF
C7 0.1uF
C8 0.1uF
C9 1uF
C10 1uF
C11 1uF
C12 1uF
JP1
JP2
JP3
JP4
U$161
U$162
U$163
U$164
U$2 3.3V
U$3 3.3V
U$4 3.3V
U$5 3.3V
_+3V3
_PWM_X0
_PWM_X1
_PWM_Y0
_PWM_Y1
_PWM_Z0
_PWM_Z1
_SPI_CLK
_SPI_OUT
_SPI_IN
_UNUSED4
_I2C_SDA
_I2C_SCL
+5V
_SONAR_CS
_LCD_CS
_SPI_CS3
_MANI0
_*RST
_UNUSED5
_UNUSED6
_H_PHONE0
_H_PHONE2
_DEPTH_SIG
_+12V
_GND0
_DIR_X0
_DIR_X1
_DIR_Y0
_DIR_Y1
_DIR_Z0
_DIR_Z1
_UNUSED7
_UNUSED8
_MCS_STRB
_MCS_CS
_MCP_STRB
_MCP_CS
_GND1
_UNUSED1
_UNUSED2
_UNUSED3
_MANI1
_UART_RX
_UART_TX
_SENSE0
_H_PHONE1
_H_PHONE3
_KILL_SIG
_GND3
SPI
CLK
SDO
SDI
VDD
CS
SHDN
PR
GND
VSS
AD5204 (control)
R21 10K