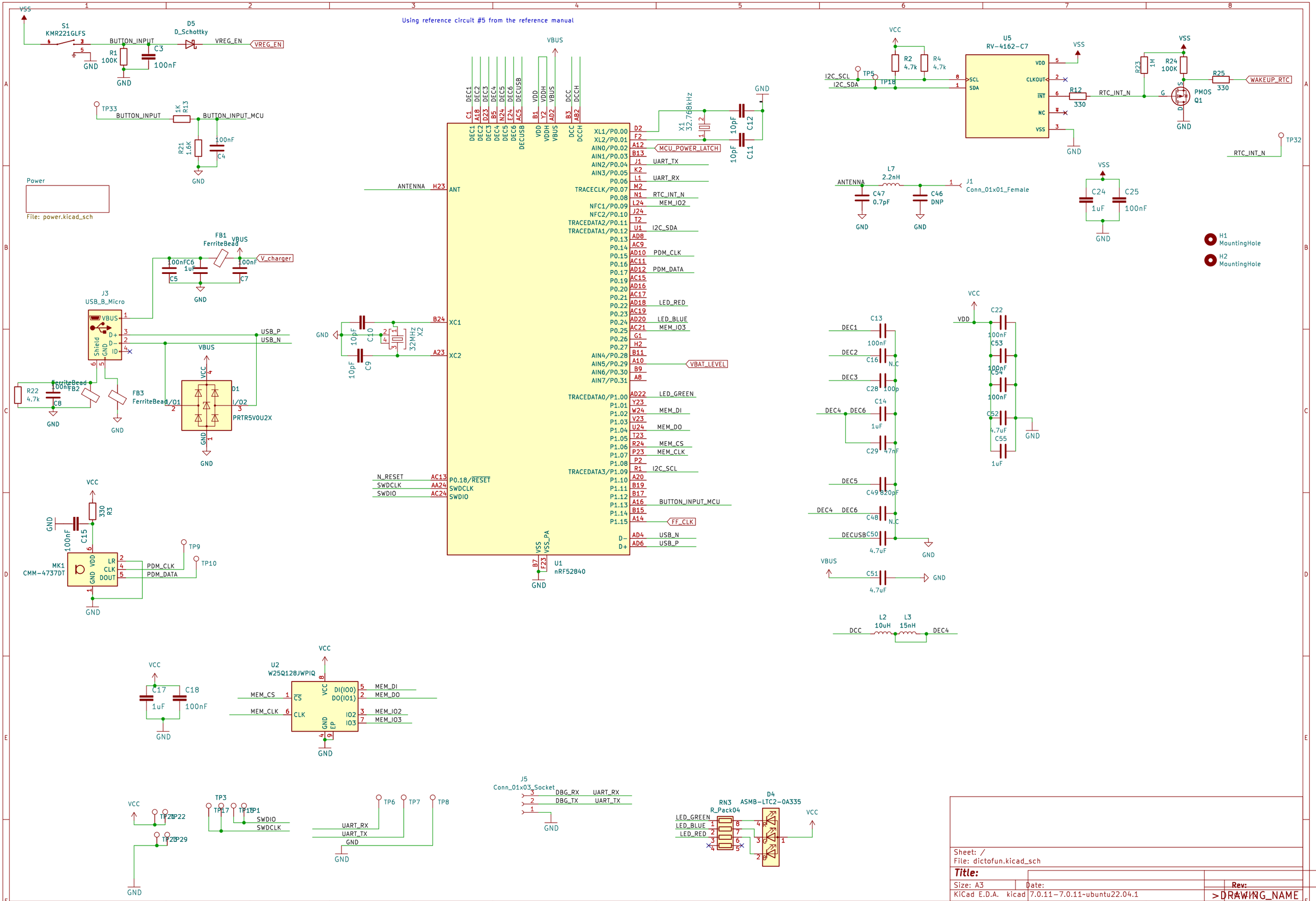
Using reference circuit #5 from the reference manual
S1 KMR221GLFS
D5 D_Schottky
BUTTON_INPUT
VREG_EN
R1 100K
C3 100nF
TP33
BUTTON_INPUT_MCU
R13 1K
R21 1.6K
C4 100nF
Power
File: power.kicad_sch
FB1 FerriteBead
V_charger
C5 100nF
C6 1uF
C7 100nF
J3 USB_B_Micro
USB_P
USB_N
R22 4.7k
C8 100nF
FB2 FerriteBead
FB3 FerriteBead
PRTR5V0U2X
MK1 CMM-4737DT
R3 330
C15 100nF
PDM_CLK
PDM_DATA
TP9
TP10
U2 W25Q128JWPIQ
MEM_CS
MEM_CLK
MEM_DI
MEM_DO
MEM_IO2
MEM_IO3
C17 1uF
C18 100nF
U1 nRF52840
ANTENNA
MCU_POWER_LATCH
UART_TX
UART_RX
RTC_INT_N
MEM_IO2
I2C_SDA
PDM_CLK
PDM_DATA
LED_RED
LED_BLUE
MEM_IO3
VBAT_LEVEL
LED_GREEN
MEM_DI
MEM_DO
MEM_CS
MEM_CLK
I2C_SCL
BUTTON_INPUT_MCU
FF_CLK
USB_N
USB_P
N_RESET
SWDCLK
SWDIO
X1 32.768kHz
C11 10pF
C12 10pF
X2 32MHz
C9 10pF
C10 10pF
U5 RV-4162-C7
R2 4.7k
R4 4.7k
TP5
TP18
R12 330
R23 1M
R24 100K
R25 330
PMOS Q1
WAKEUP_RTC
TP32
L7 2.2nH
C47 0.7pF
C46 DNP
J1 Conn_01x01_Female
C24 1uF
C25 100nF
H1 MountingHole
H2 MountingHole
C13 100nF
C16 N.C
C28 100p
C14 1uF
C29 47nF
C49 820pF
C48 N.C
C50 4.7uF
C51 4.7uF
C22 100nF
C53 100nF
C54 100nF
C52 4.7uF
C55 1uF
L2 10uH
L3 15nH
DCC
DEC4
J5 Conn_01x03_Socket
DBG_RX
DBG_TX
TP3
TP6
TP7
TP8
RN3 R_Pack04
D4 ASMB-LTC2-0A335
Sheet: /
File: dictofun.kicad_sch
Title:
Size: A3
Date:
Rev:
KiCad E.D.A. kicad 7.0.11-7.0.11~ubuntu22.04.1
>DRAWING_NAME
>LAST_DATE_TIME
Sheet: >SHEET

Reference schematic for the DC-DC.
Calculated efficiency: 92%
Calculated using
https://webench.ti.com/wb5/PartDesigner/quickview.jsp,
Vin 2.5..5.5V, target I=0.1A or less

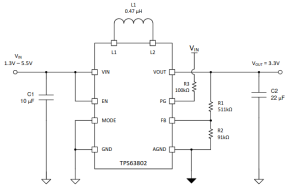

Figure 10-1. 3.3 V_{OUT} Typical Application

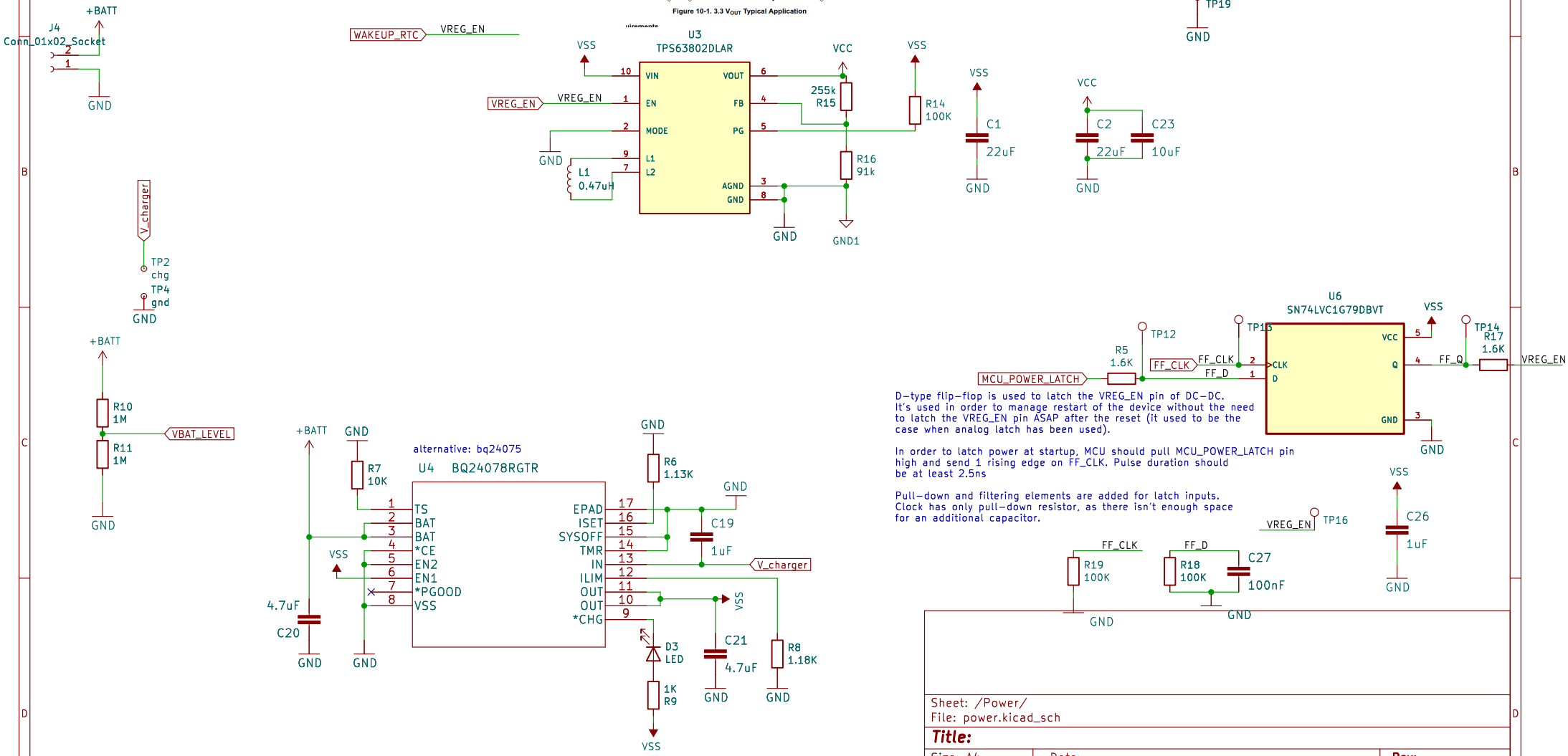

Sheet: /Power/
File: power.kicad_sch

Title:

Size: A4	Date:	Rev:
KiCad E.D.A. kicad 7.0.11-7.0.11~ubuntu22.04.1		Id: 2/2