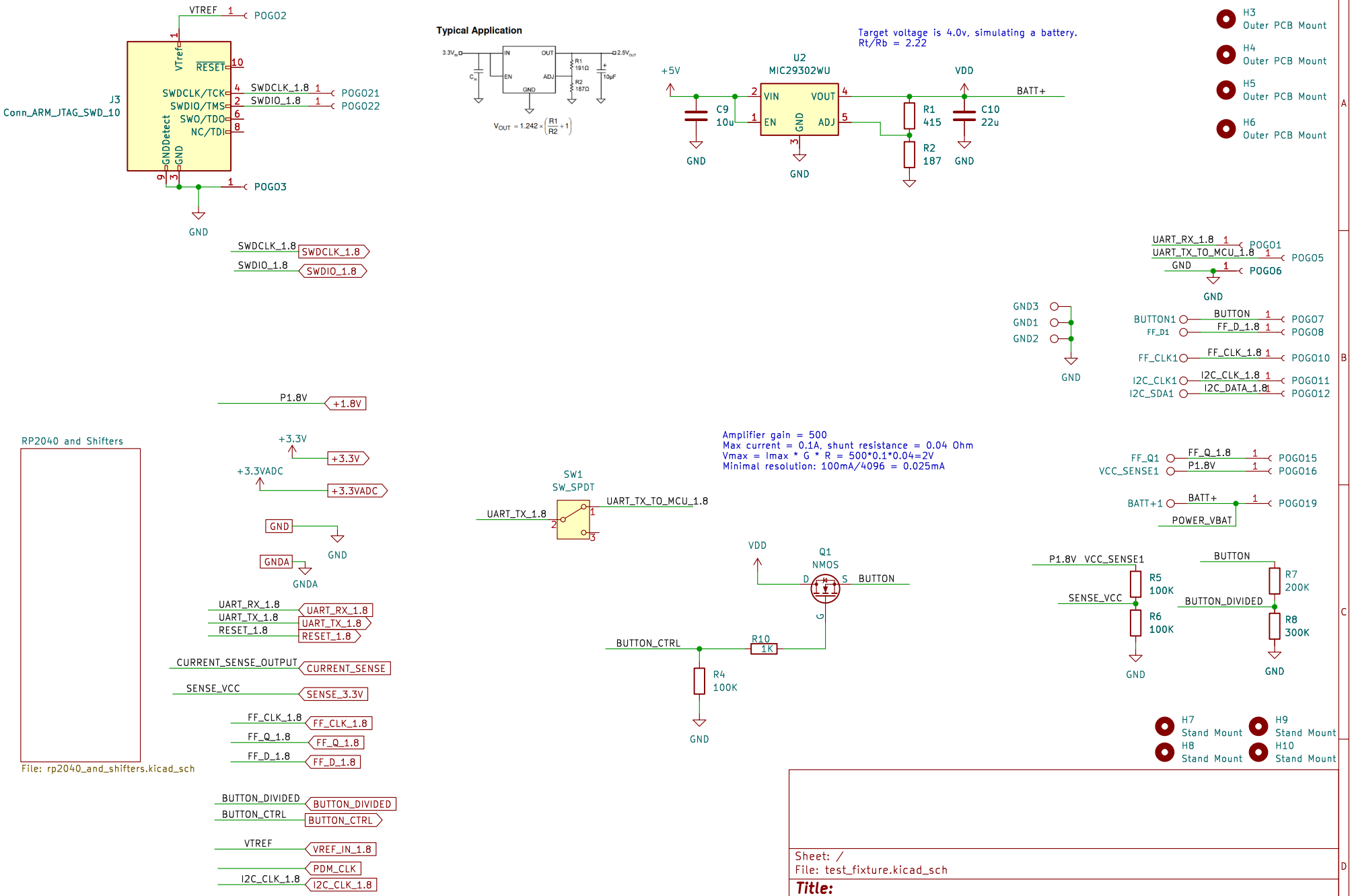
J3
Conn_ARM_JTAG_SWD_10
VTREF
POGO2
VTref
RESET
SWDCLK/TCK
SWDIO/TMS
SWO/TDO
NC/TDI
GNDDetect
GND
SWDCLK_1.8
SWDIO_1.8
POGO21
POGO22
POGO3
Typical Application
U2
MIC29302WU
VIN
VOUT
EN
GND
ADJ
+5V
C9
10u
R1
415
R2
187
C10
22u
VDD
BATT+
Target voltage is 4.0v, simulating a battery.
Rt/Rb = 2.22
H3
Outer PCB Mount
H4
Outer PCB Mount
H5
Outer PCB Mount
H6
Outer PCB Mount
UART_RX_1.8
UART_TX_TO_MCU_1.8
POGO1
POGO5
POGO6
GND3
GND1
GND2
BUTTON1
FF_D1
BUTTON
FF_D_1.8
POGO7
POGO8
FF_CLK1
FF_CLK_1.8
POGO10
I2C_CLK1
I2C_SDA1
I2C_CLK_1.8
I2C_DATA_1.8
POGO11
POGO12
P1.8V
+1.8V
+3.3V
+3.3VADC
GNDA
RP2040 and Shifters
File: rp2040_and_shifters.kicad_sch
UART_RX_1.8
UART_TX_1.8
RESET_1.8
CURRENT_SENSE_OUTPUT
CURRENT_SENSE
SENSE_VCC
SENSE_3.3V
FF_CLK_1.8
FF_Q_1.8
FF_D_1.8
BUTTON_DIVIDED
BUTTON_CTRL
VREF
VREF_IN_1.8
PDM_CLK
I2C_CLK_1.8
Amplifier gain = 500
Max current = 0.1A, shunt resistance = 0.04 Ohm
Vmax = Imax * G * R = 500*0.1*0.04=2V
Minimal resolution: 100mA/4096 = 0.025mA
SW1
SW_SPDT
UART_TX_1.8
UART_TX_TO_MCU_1.8
Q1
NMOS
BUTTON
R10
1K
R4
100K
FF_Q1
VCC_SENSE1
FF_Q_1.8
POGO15
POGO16
BATT+1
POWER_VBAT
POGO19
R5
100K
R6
100K
SENSE_VCC
R7
200K
R8
300K
H7
Stand Mount
H8
Stand Mount
H9
Stand Mount
H10
Stand Mount
Sheet: /
File: test_fixture.kicad_sch
Title:
Size: A4
Date:
Rev:
KiCad E.D.A. kicad 7.0.10-7.0.10~ubuntu22.04.1
Id: 1/2

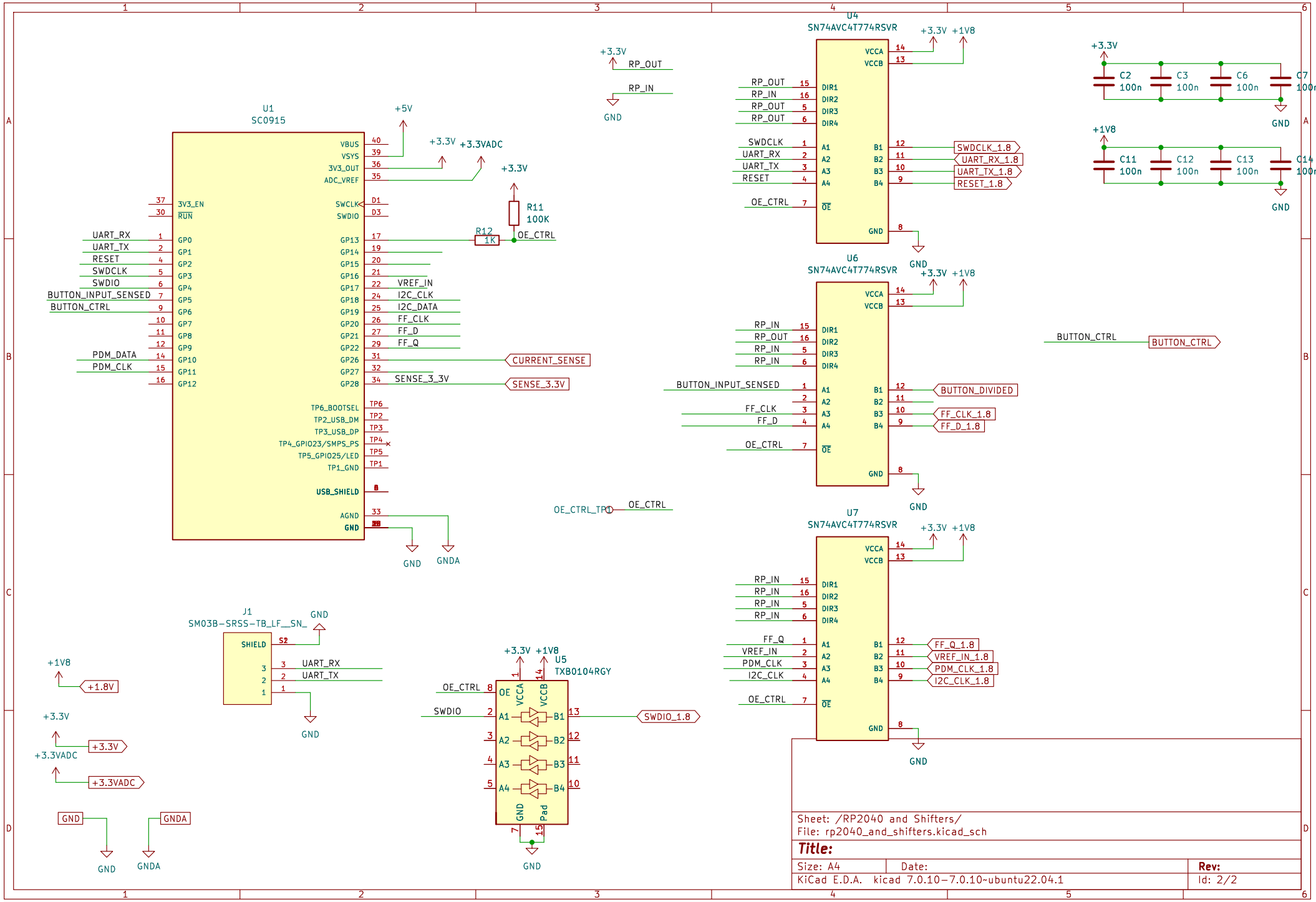
U1
SC0915
VBUS
VSYS
3V3_OUT
ADC_VREF
3V3_EN
RUN
SWCLK
SWDIO
GP0
GP1
GP2
GP3
GP4
GP5
GP6
GP7
GP8
GP9
GP10
GP11
GP12
GP13
GP14
GP15
GP16
GP17
GP18
GP19
GP20
GP21
GP22
GP26
GP27
GP28
TP6_BOOTSEL
TP2_USB_DM
TP3_USB_DP
TP4_GPIO23/SMPS_PS
TP5_GPIO25/LED
TP1_GND
USB_SHIELD
AGND
GND
+5V
+3.3V
+3.3VADC
R11
100K
R12
1K
OE_CTRL
UART_RX
UART_TX
RESET
SWDCLK
SWDIO
BUTTON_INPUT_SENSED
BUTTON_CTRL
PDM_DATA
PDM_CLK
VREF_IN
I2C_CLK
I2C_DATA
FF_CLK
FF_D
FF_Q
CURRENT_SENSE
SENSE_3_3V
GNDA
RP_OUT
RP_IN
U4
SN74AVC4T774RSVR
VCCA
VCCB
DIR1
DIR2
DIR3
DIR4
A1
A2
A3
A4
B1
B2
B3
B4
OE
SWDCLK_1.8
UART_RX_1.8
UART_TX_1.8
RESET_1.8
+1V8
C2
100n
C3
100n
C6
100n
C7
100n
C11
100n
C12
100n
C13
100n
C14
100n
U6
BUTTON_DIVIDED
FF_CLK_1.8
FF_D_1.8
OE_CTRL_TP1
U7
FF_Q_1.8
VREF_IN_1.8
PDM_CLK_1.8
I2C_CLK_1.8
J1
SM03B-SRSS-TB_LF__SN_
SHIELD
S2
+1.8V
U5
TXB0104RGY
SWDIO_1.8
Pad
Sheet: /RP2040 and Shifters/
File: rp2040_and_shifters.kicad_sch
Title:
Size: A4
Date:
Rev:
KiCad E.D.A. kicad 7.0.10-7.0.10~ubuntu22.04.1
Id: 2/2