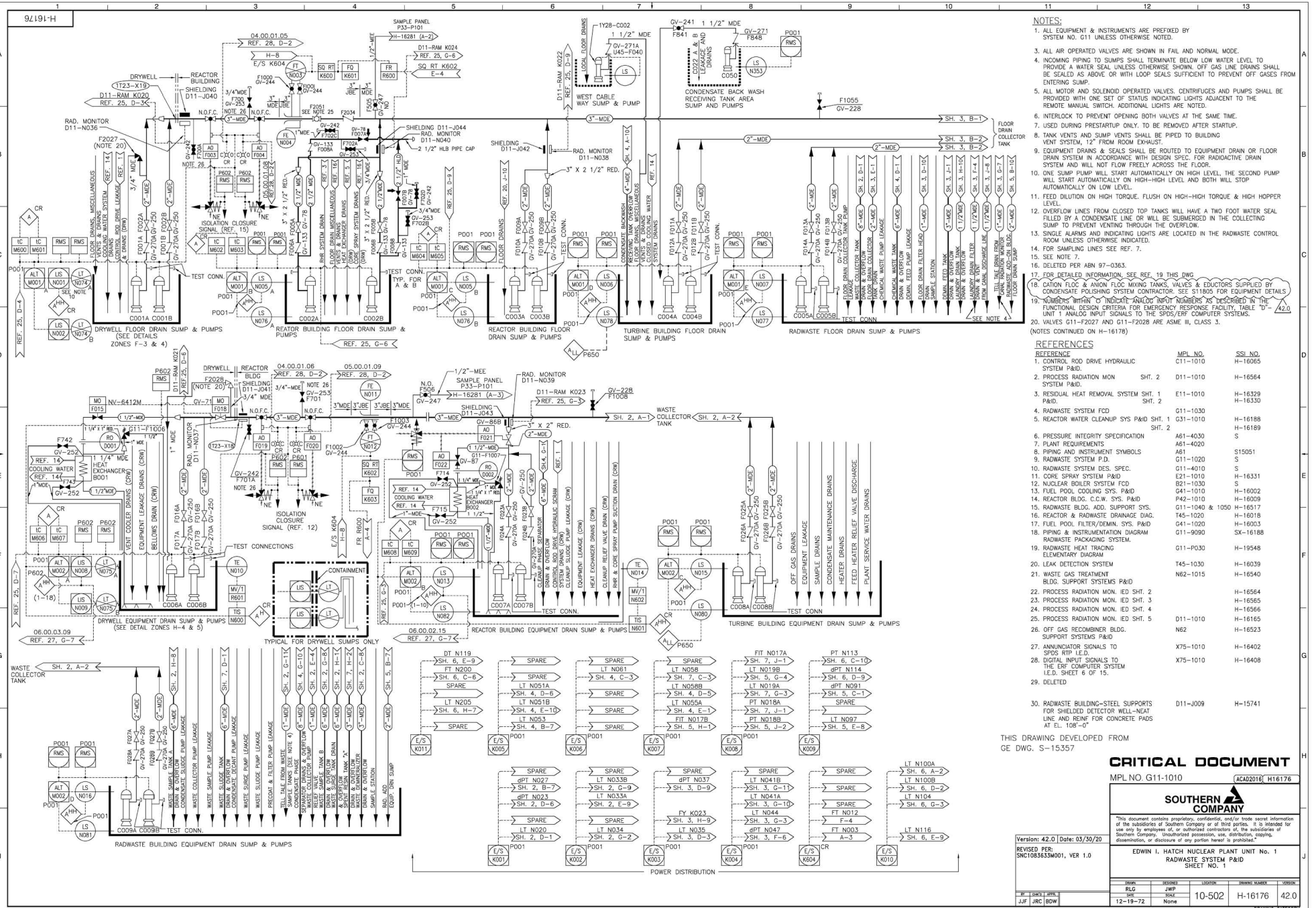
H-16176
NOTES:
1. ALL EQUIPMENT & INSTRUMENTS ARE PREFIXED BY SYSTEM NO. G11 UNLESS OTHERWISE NOTED.
3. ALL AIR OPERATED VALVES ARE SHOWN IN FAIL AND NORMAL MODE.
4. INCOMING PIPING TO SUMPS SHALL TERMINATE BELOW LOW WATER LEVEL TO PROVIDE A WATER SEAL UNLESS OTHERWISE SHOWN. OFF GAS LINE DRAINS SHALL BE SEALED AS ABOVE OR WITH LOOP SEALS SUFFICIENT TO PREVENT OFF GASES FROM ENTERING SUMP.
5. ALL MOTOR AND SOLENOID OPERATED VALVES, CENTRIFUGES AND PUMPS SHALL BE PROVIDED WITH ONE SET OF STATUS INDICATING LIGHTS ADJACENT TO THE REMOTE MANUAL SWITCH. ADDITIONAL LIGHTS ARE NOTED.
6. INTERLOCK TO PREVENT OPENING BOTH VALVES AT THE SAME TIME.
7. USED DURING PRESTARTUP ONLY. TO BE REMOVED AFTER STARTUP.
8. TANK VENTS AND SUMP VENTS SHALL BE PIPED TO BUILDING VENT SYSTEM, 12" FROM ROOM EXHAUST.
9. EQUIPMENT DRAINS & SEALS SHALL BE ROUTED TO EQUIPMENT DRAIN OR FLOOR DRAIN SYSTEM IN ACCORDANCE WITH DESIGN SPEC. FOR RADIOACTIVE DRAIN SYSTEM AND WILL NOT FLOW FREELY ACROSS THE FLOOR.
10. ONE SUMP PUMP WILL START AUTOMATICALLY ON HIGH LEVEL, THE SECOND PUMP WILL START AUTOMATICALLY ON HIGH-HIGH LEVEL AND BOTH WILL STOP AUTOMATICALLY ON LOW LEVEL.
11. FEED DILUTION ON HIGH TORQUE. FLUSH ON HIGH-HIGH TORQUE & HIGH HOPPER LEVEL.
12. OVERFLOW LINES FROM CLOSED TOP TANKS WILL HAVE A TWO FOOT WATER SEAL FILLED BY A CONDENSATE LINE OR WILL BE SUBMERGED IN THE COLLECTING SUMP TO PREVENT VENTING THROUGH THE OVERFLOW.
13. SINGLE ALARMS AND INDICATING LIGHTS ARE LOCATED IN THE RADWASTE CONTROL ROOM UNLESS OTHERWISE INDICATED.
14. FOR SAMPLING LINES SEE REF. 7.
15. SEE NOTE 7.
16. DELETED PER ABN 97-0363.
17. FOR DETAILED INFORMATION, SEE REF. 19 THIS DWG
18. CATION FLOC & ANION FLOC MIXING TANKS, VALVES & EDUCTORS SUPPLIED BY CONDENSATE POLISHING SYSTEM CONTRACTOR. SEE S11805 FOR EQUIPMENT DETAILS.
19. NUMBERS WITHIN ◇ INDICATE ANALOG INPUT NUMBERS AS DESCRIBED IN THE FUNCTIONAL DESIGN CRITERIA FOR EMERGENCY RESPONSE FACILITY, TABLE "D" UNIT 1 ANALOG INPUT SIGNALS TO THE SPDS/ERF COMPUTER SYSTEMS. 42.0
20. VALVES G11-F2027 AND G11-F2028 ARE ASME III, CLASS 3.
(NOTES CONTINUED ON H-16178)
REFERENCES
REFERENCE MPL NO. SSI NO.
1. CONTROL ROD DRIVE HYDRAULIC SYSTEM P&ID. C11-1010 H-16065
2. PROCESS RADIATION MON SYSTEM P&ID. SHT. 2 D11-1010 H-16564
3. RESIDUAL HEAT REMOVAL SYSTEM P&ID. SHT. 1 E11-1010 H-16329
SHT. 2 H-16330
4. RADWASTE SYSTEM FCD G11-1030
5. REACTOR WATER CLEANUP SYS P&ID SHT. 1 G31-1010 H-16188
SHT. 2 H-16189
6. PRESSURE INTEGRITY SPECIFICATION A61-4030 S
7. PLANT REQUIREMENTS A61-4020
8. PIPING AND INSTRUMENT SYMBOLS A61 S15051
9. RADWASTE SYSTEM P.D. G11-1020 S
10. RADWASTE SYSTEM DES. SPEC. G11-4010 S
11. CORE SPRAY SYSTEM P&ID E21-1010 H-16331
12. NUCLEAR BOILER SYSTEM FCD B21-1030 S
13. FUEL POOL COOLING SYS. P&ID G41-1010 H-16002
14. REACTOR BLDG. C.C.W. SYS. P&ID P42-1010 H-16009
15. RADWASTE BLDG. ADD. SUPPORT SYS. G11-1040 & 1050 H-16517
16. REACTOR & RADWASTE DRAINAGE DIAG. T45-1020 H-16018
17. FUEL POOL FILTER/DEMIN. SYS. P&ID G41-1020 H-16003
18. PIPING & INSTRUMENTATION DIAGRAM RADWASTE PACKAGING SYSTEM. G11-9090 SX-16188
19. RADWASTE HEAT TRACING ELEMENTARY DIAGRAM G11-P030 H-19548
20. LEAK DETECTION SYSTEM T45-1030 H-16039
21. WASTE GAS TREATMENT BLDG. SUPPORT SYSTEMS P&ID N62-1015 H-16540
22. PROCESS RADIATION MON. IED SHT. 2 H-16564
23. PROCESS RADIATION MON. IED SHT. 3 H-16565
24. PROCESS RADIATION MON. IED SHT. 4 H-16566
25. PROCESS RADIATION MON. IED SHT. 5 D11-1010 H-16165
26. OFF GAS RECOMBINER BLDG. SUPPORT SYSTEMS P&ID N62 H-16523
27. ANNUNCIATOR SIGNALS TO SPDS RTP I.E.D. X75-1010 H-16402
28. DIGITAL INPUT SIGNALS TO THE ERF COMPUTER SYSTEM I.E.D. SHEET 6 OF 15. X75-1010 H-16408
29. DELETED
30. RADWASTE BUILDING-STEEL SUPPORTS FOR SHIELDED DETECTOR WELL-NEAT LINE AND REINF FOR CONCRETE PADS AT EL. 108'-0" D11-J009 H-15741
THIS DRAWING DEVELOPED FROM GE DWG. S-15357
CRITICAL DOCUMENT
MPL NO. G11-1010
ACAD2016 H16176
SOUTHERN COMPANY
"This document contains proprietary, confidential, and/or trade secret information of the subsidiaries of Southern Company or of third parties. It is intended for use only by employees of, or authorized contractors of, the subsidiaries of Southern Company. Unauthorized possession, use, distribution, copying, dissemination, or disclosure of any portion hereof is prohibited."
EDWIN I. HATCH NUCLEAR PLANT UNIT No. 1
RADWASTE SYSTEM P&ID
SHEET NO. 1
Version: 42.0 Date: 03/30/20
REVISED PER: SNC1083633M001, VER 1.0
BY CHK'D APPR'D
JJF JRC BDW
DRAWN RLG
DESIGNED JWP
DATE 12-19-72
SCALE None
LOCATION 10-502
DRAWING NUMBER H-16176
VERSION 42.0
DRAWING CATEGORY: CRITICAL
DRYWELL FLOOR DRAIN SUMP & PUMPS (SEE DETAILS ZONES F-3 & 4)
REATOR BUILDING FLOOR DRAIN SUMP & PUMPS
REACTOR BUILDING FLOOR DRAIN SUMP & PUMPS
TURBINE BUILDING FLOOR DRAIN SUMP & PUMPS
RADWASTE FLOOR DRAIN SUMP & PUMPS
DRYWELL EQUIPMENT DRAIN SUMP & PUMPS (SEE DETAIL ZONES H-4 & 5)
TYPICAL FOR DRYWELL SUMPS ONLY
REACTOR BUILDING EQUIPMENT DRAIN SUMP & PUMPS
TURBINE BUILDING EQUIPMENT DRAIN SUMP & PUMPS
RADWASTE BUILDING EQUIPMENT DRAIN SUMP & PUMPS
POWER DISTRIBUTION
WEST CABLE WAY SUMP & PUMP
CONDENSATE BACK WASH RECEIVING TANK AREA SUMP AND PUMPS
WASTE COLLECTOR TANK
TEST CONN.
TEST CONNECTIONS
ISOLATION CLOSURE SIGNAL (REF. 15)
ISOLATION CLOSURE SIGNAL (REF. 12)
CONTAINMENT
SAMPLE PANEL P33-P101
H-16281 (A-2)
H-16281 (A-3)
SHIELDING D11-J040
SHIELDING D11-J041
SHIELDING D11-J042
SHIELDING D11-J043
SHIELDING D11-J044
RAD. MONITOR D11-N036
RAD. MONITOR D11-N037
RAD. MONITOR D11-N038
RAD. MONITOR D11-N039
RAD. MONITOR D11-N040
2 1/2" HLB PIPE CAP
REACTOR BUILDING
DRYWELL
FLOOR DRAIN COLLECTOR TANK
WEST CABLE WAY SUMP & PUMP
CONDENSATE BACK WASH RECEIVING TANK AREA SUMP AND PUMPS
TEST CONN
SEE NOTE 4
SEE NOTE 10
SEE NOTE 26
SEE NOTE 20
SEE NOTE 25
SEE NOTE 28
REF. 25, D-4
REF. 25, G-6
REF. 25, D-3
REF. 25, D-7
REF. 25, G-7
REF. 25, H-8
REF. 25, A-4
REF. 25, A-3
REF. 25, D-6
REF. 25, D-3
REF. 25, H-3
REF. 25, H-4
REF. 25, H-5
REF. 25, H-6
REF. 25, H-7
REF. 25, H-8
REF. 25, A-2
REF. 25, A-1
REF. 25, G-3
REF. 25, G-4
REF. 25, G-5
REF. 25, G-7
REF. 25, H-1
REF. 25, H-2

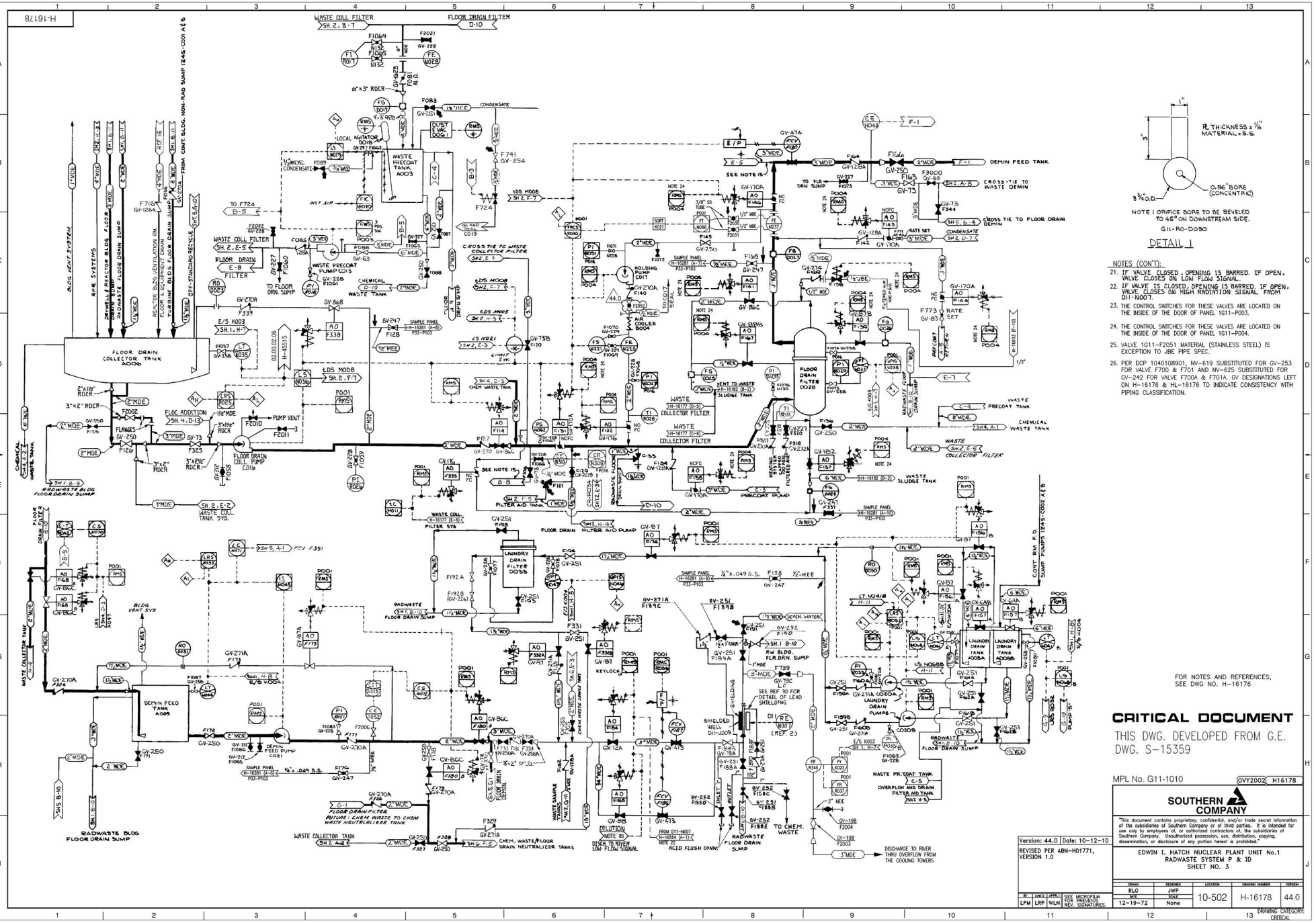
H-16178
WASTE COLL FILTER
SH. 2, B-7
FLOOR DRAIN FILTER
D-10
FROM CONT BLDG. NON-RAD SUMP 1245-C001 A&B
BLDG. VENT SYSTEM
RHR SYSTEMS
DRYWELL REACTOR BLDG. FLOOR DRAIN SUMP
REACTOR BLDG. VENTILATION RM. FLOOR & EQUIPMENT DRAIN
TURBINE BLDG. FLOOR DRAIN SUMP
OFF-STANDARD RECYCLE
CONDENSATE
LOCAL AGITATOR
WASTE PRECOAT TANK A003
INST AIR
TO F724
WASTE COLL FILTER
FLOOR DRAIN FILTER E-8
TO FLOOR DRN. SUMP
WASTE PRECOAT PUMP C013
CHEMICAL WASTE TANK
CROSS TIE TO WASTE COLLECTOR FILTER
FLOOR DRAIN COLLECTOR TANK A006
FLOOR DRAIN COLL. PUMP C016
FLOC ADDITION
PUMP VENT
WASTE COLL TANK SYS.
WASTE COLLECTOR TANK
RADWASTE BLDG FLOOR DRAIN SUMP
FLOOR DRAIN FILTER
FUTURE: CHEM. WASTE TO CHEM WASTE NEUTRALIZER TANK
CHEM. WASTE/FLOOR DRAIN NEUTRALIZER TANKS
DILUTION NOTE 21
DISCH. TO RIVER LOW FLOW SIGNAL
ACID FLUSH CONN.
RADWASTE FLOOR DRAIN SUMP
TO CHEM. WASTE
DISCHARGE TO RIVER THRU OVERFLOW FROM THE COOLING TOWERS
WASTE PRECOAT TANK C-5
OVERFLOW AND DRAIN FILTER AND TANK
LAUNDRY DRAIN TANK A008A
LAUNDRY DRAIN TANK A008B
LAUNDRY DRAIN FILTER D055
LAUNDRY DRAIN PUMPS
RW BLDG. FLR. DRN. SUMP
DEMIN FEED TANK A009
DEMIN FEED PUMP C081
SHIELDED WELL D11-J009
DEMIN. WATER
CONT. RM. F.D. SUMP PUMPS 1245-C002 A&B
WASTE SLUDGE TANK
WASTE COLLECTOR FILTER
WASTE PRECOAT TANK C-4
CHEMICAL WASTE TANK
RADWASTE FLOOR DRAIN SUMP
FILTER AID TANK
FILTER AID PUMP
PRECOAT PUMP
HEATING COIL SLUDGE FILTERED AID
FLOOR DRAIN FILTER D058
FLOOR DRAIN COLLECTOR TANK A006
WASTE COLL. H-16177 (E-6) FILTER SYS
WASTE H-16177 (D-5) COLLECTOR FILTER
WASTE H-16177 (C-6) COLLECTOR FILTER
WASTE H-16182 (B-2) SLUDGE TANK
SEE NOTE 15
SEE REF 30 FOR DETAIL OF LEAD SHIELDING
SEE NOTE 24
SAMPLE PANEL H-16281 (A-7) P33-P103
SAMPLE PANEL H-16281 (A-8) P33-P103
SAMPLE PANEL H-16281 (B-8) P33-P103
SAMPLE PANEL H-16281 (B-10) P33-P103
SAMPLE PANEL H-16281 (A-10) P33-P103
E/S K003
E/S K004
E/S K005
E/S K006
E/S K007
E/S K008
E/S K009
E/S K010
E/S K011
E/S K012
E/S K013
E/S K014
E/S K015
E/S K016
E/S K017
E/S K018
E/S K019
E/S K020
E/S K021
E/S K022
E/S

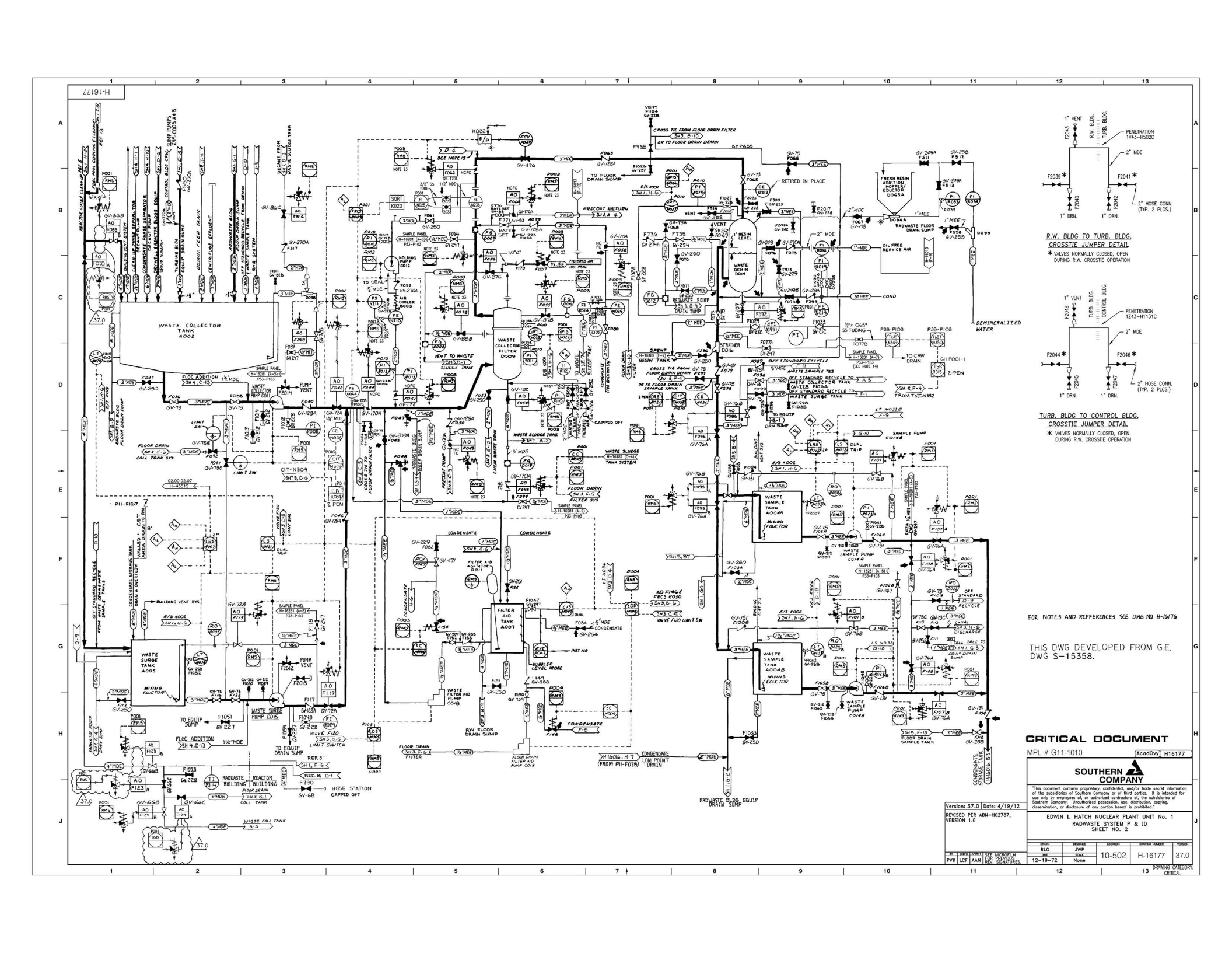
H-16177
WASTE COLLECTOR TANK A002
WASTE SURGE TANK A005
WASTE SAMPLE TANK A004A
WASTE SAMPLE TANK A004B
FILTER AID TANK A007
WASTE COLLECTOR FILTER D005
RADWASTE BUILDING
REACTOR BUILDING
TURBINE BLDG
CONTROL BLDG
RW BLDG
TURB. BLDG
R.W. BLDG TO TURB. BLDG. CROSSTIE JUMPER DETAIL
* VALVES NORMALLY CLOSED, OPEN DURING R.W. CROSSTIE OPERATION
TURB. BLDG TO CONTROL BLDG. CROSSTIE JUMPER DETAIL
* VALVES NORMALLY CLOSED, OPEN DURING R.W. CROSSTIE OPERATION
PENETRATION 1143-H502C
PENETRATION 1243-H113C
2" HOSE CONN. (TYP. 2 PLCS.)
DEMINERALIZED WATER
OIL FREE SERVICE AIR
FRESH RESIN ADDITION HOPPER/EDUCTOR D005A
RADWASTE FLOOR DRAIN SUMP
RETIRED IN PLACE
CROSS TIE FROM FLOOR DRAIN FILTER
OR TO FLOOR DRAIN DEMIN
BYPASS
TO FLOOR DRAIN SUMP
PRECOAT RETURN
SPENT RESIN TANK
STRAINER D016
WASTE SURGE PUMP D015
WASTE FILTER AID PUMP C015
RW FLOOR DRAIN SUMP
FLOOR DRAIN FILTER
FLOOR DRAIN FILTER AID PUMP C019
FLOOR DRAIN SAMPLE TANK
CONDENSATE STORAGE TANK
CONDENSATE LOW POINT DRAIN
RADWASTE BLDG EQUIP DRAIN SUMP
WASTE COLL TANK
HOSE STATION CAPPED OFF
CAPPED OFF
TO EQUIP DRAIN SUMP
TO EQUIP SUMP
TO CRW DRAIN
TO SEAL
VENT TO WASTE SLUDGE TANK
WASTE SLUDGE TANK SYSTEM
FLOOR DRAIN FILTER SYS
WASTE SAMPLE TANK MIXING EDUCTOR
WASTE SAMPLE PUMP C014B
SAMPLE PUMP C014A
OFF STANDARD RECYCLE TO F-1
OFF STANDARD RECYCLE TO 2 A-5
WASTE SAMPLE TES
FROM TOLT-N352
2-PEN
G1 P001-1
SAMPLE PANEL H-16181 (A-5) P33-P103
SAMPLE PANEL H-16181 (A-6) P33-P103 (SEE NOTE 14)
SAMPLE PANEL H-16181 (A-8) P33-P103
SAMPLE PANEL H-16181 (A-9) P33-P103
SAMPLE PANEL H-16181 (A-6)C P33-P103
FOR NOTES AND REFFERENCES SEE DWG NO H-16176
THIS DWG DEVELOPED FROM G.E. DWG S-15358.
CRITICAL DOCUMENT
MPL # G11-1010
AcadOvy H16177
SOUTHERN COMPANY
"This document contains proprietary, confidential, and/or trade secret information of the subsidiaries of Southern Company or of third parties. It is intended for use only by employees of, or authorized contractors of, the subsidiaries of Southern Company. Unauthorized possession, use, distribution, copying, dissemination, or disclosure of any portion hereof is prohibited."
EDWIN I. HATCH NUCLEAR PLANT UNIT No. 1
RADWASTE SYSTEM P & ID
SHEET NO. 2
Version: 37.0 Date: 4/19/12
REVISED PER ABN-H02787, VERSION 1.0
BY CHK'D APPR'D
PVK LCF AAN
SEE MICROFILM FOR PREVIOUS REV. SIGNATURES.
DRAWN RLO
DESIGNED JWP
LOCATION 10-502
DRAWING NUMBER H-16177
VERSION 37.0
DATE 12-19-72
SCALE None
DRAWING CATEGORY: CRITICAL

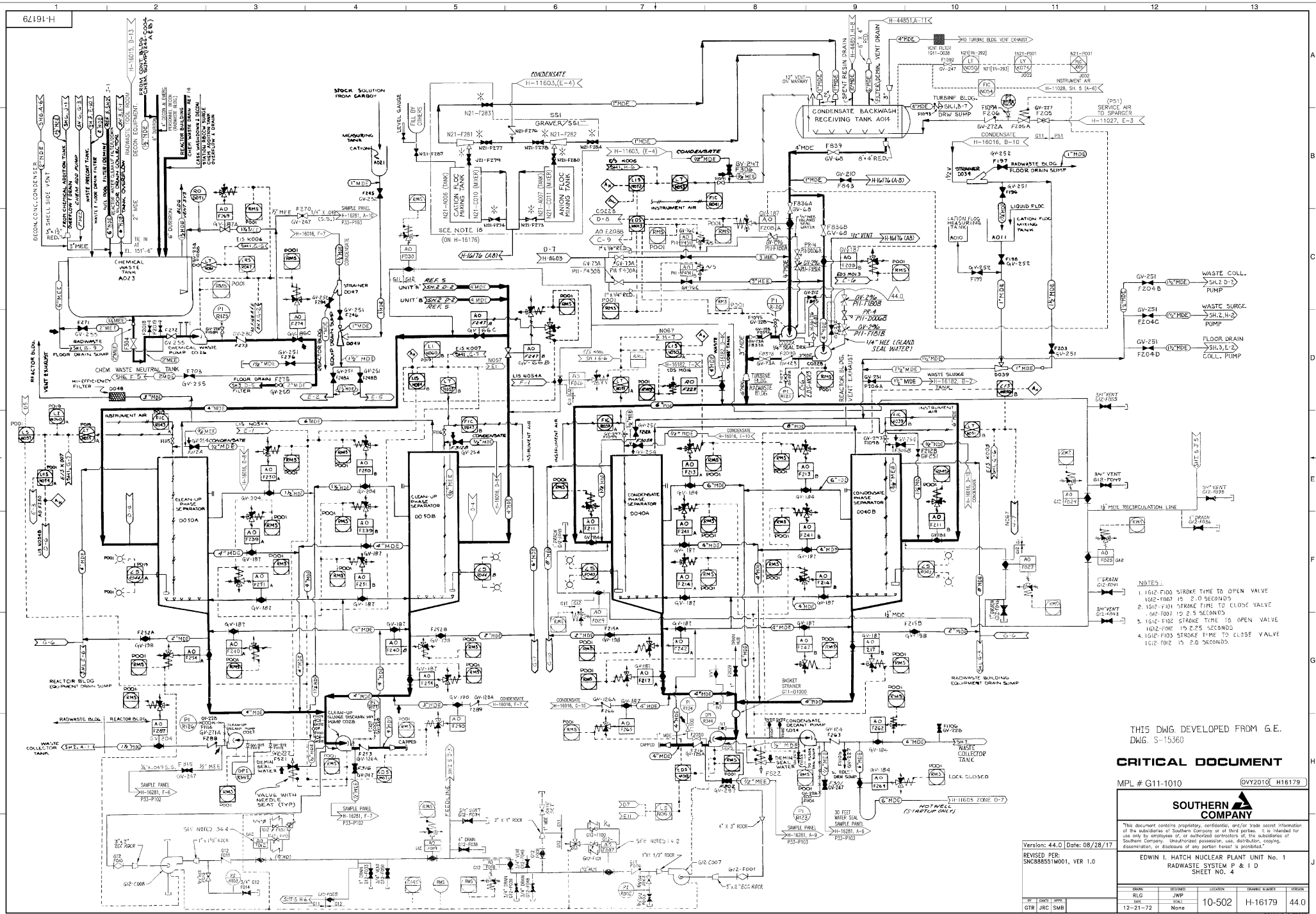

NOTES:

1. 1G12-F100 STROKE TIME TO OPEN VALVE 1G12-F007 IS 2.0 SECONDS
2. 1G12-F101 STROKE TIME TO CLOSE VALVE 1G12-F007 IS 2.5 SECONDS
3. 1G12-F102 STROKE TIME TO OPEN VALVE 1G12-F012 IS 2.25 SECONDS
4. 1G12-F103 STROKE TIME TO CLOSE VALVE 1G12-F012 IS 2.0 SECONDS.

"This document contains proprietary, confidential, and/or trade secret information of the subsidiaries of Southern Company or of third parties. It is intended for use only by employees of, or authorized contractors of, the subsidiaries of Southern Company. Unauthorized possession, use, distribution, copying, dissemination, or disclosure of any portion hereof is prohibited."

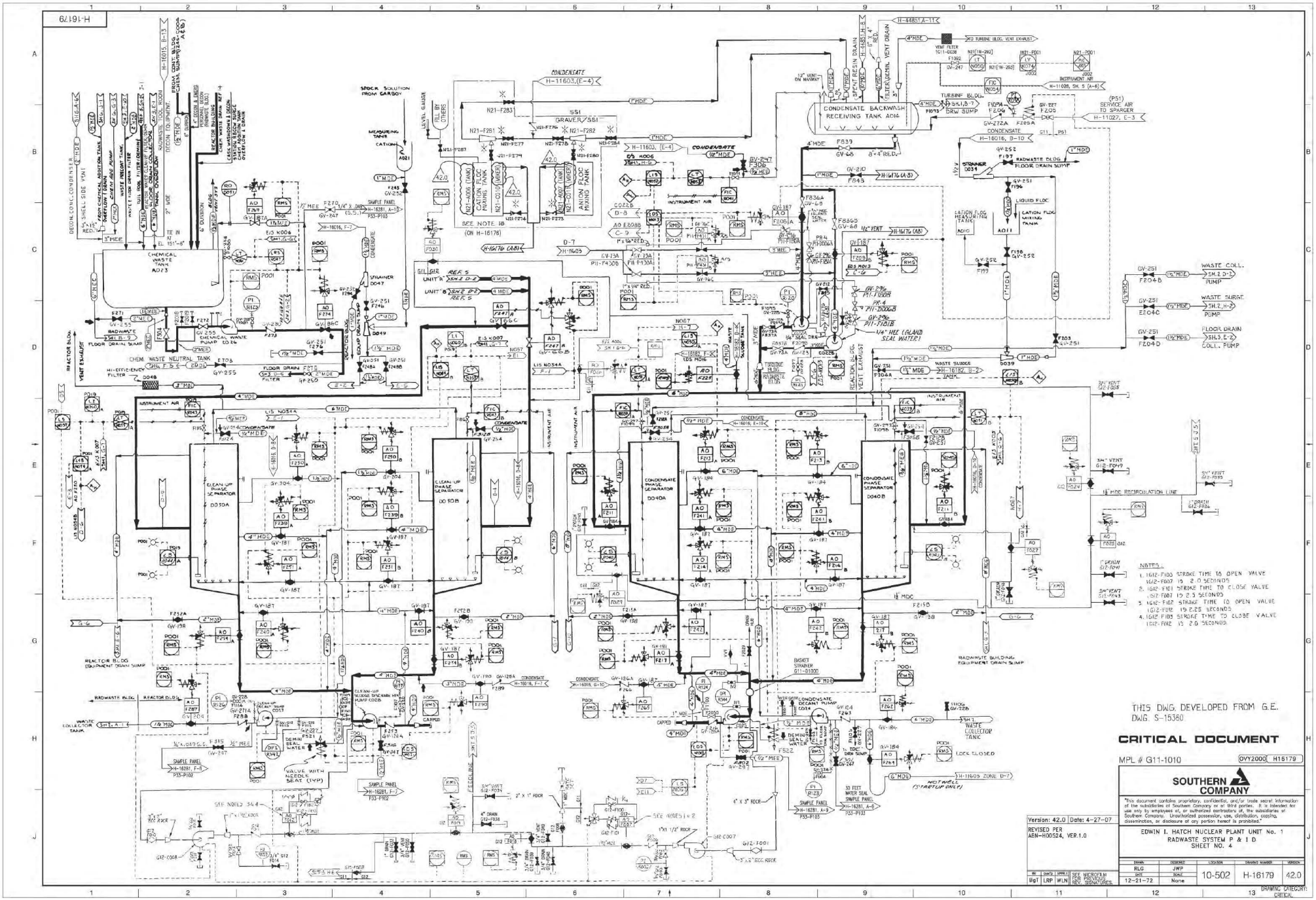

NOTES:

1. 1G12-F100 STROKE TIME TO OPEN VALVE 1G12-F007 IS 2.0 SECONDS
2. 1G12-F101 STROKE TIME TO CLOSE VALVE 1G12-F007 IS 2.5 SECONDS
3. 1G12-F102 STROKE TIME TO OPEN VALVE 1G12-F012 IS 2.25 SECONDS
4. 1G12-F103 STROKE TIME TO CLOSE VALVE 1G12-F012 IS 2.0 SECONDS.

"This document contains proprietary, confidential, and/or trade secret information of the subsidiaries of Southern Company or of third parties. It is intended for use only by employees of, or authorized contractors of, the subsidiaries of Southern Company. Unauthorized possession, use, distribution, copying, dissemination, or disclosure of any portion hereof is prohibited."

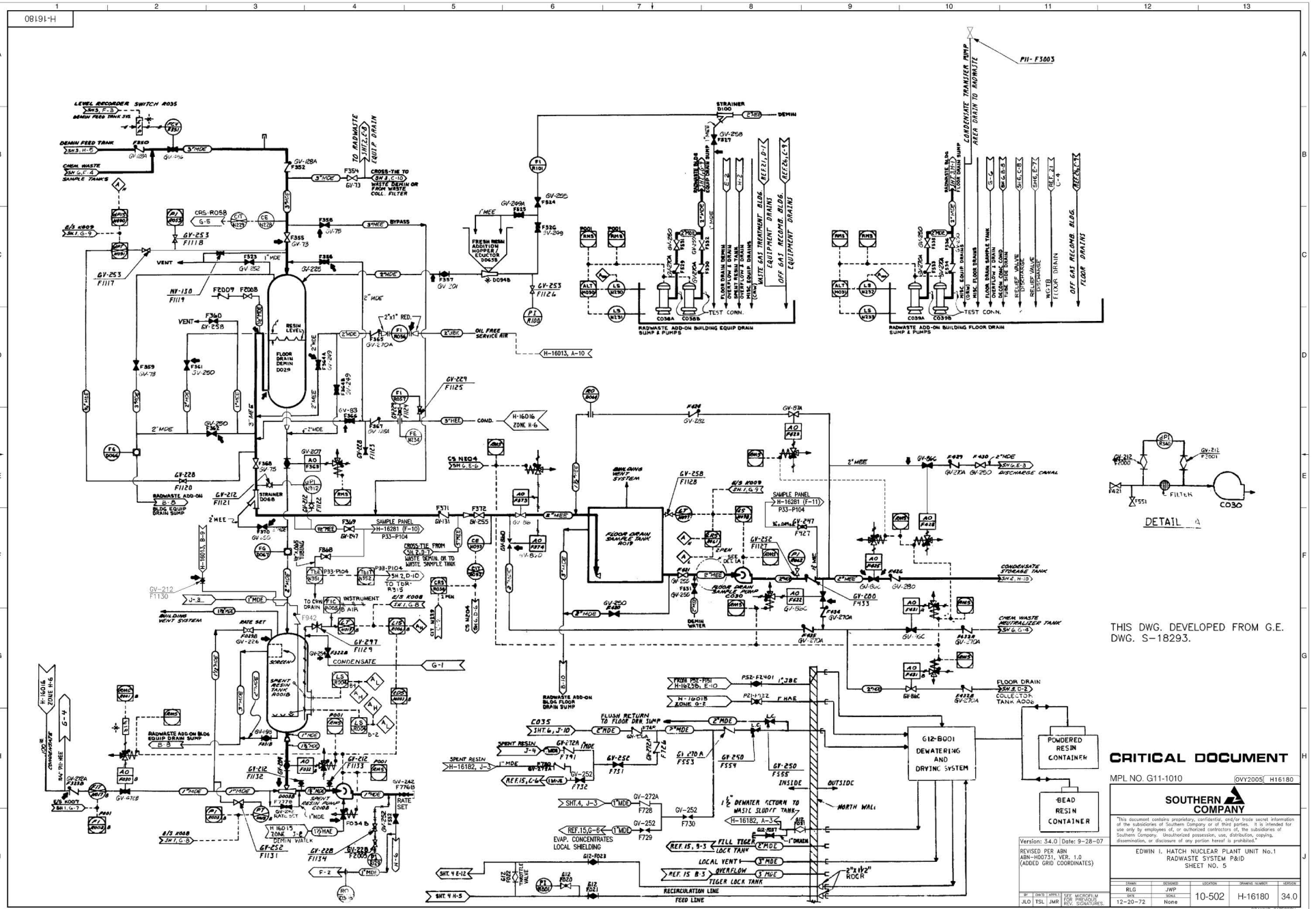
H-16180
DETAIL A
THIS DWG. DEVELOPED FROM G.E. DWG. S-18293.
G12-B001 DEWATERING AND DRYING SYSTEM
POWDERED RESIN CONTAINER
BEAD RESIN CONTAINER
RADWASTE ADD-ON BUILDING EQUIP DRAIN SUMP B-B
RADWASTE ADD-ON BUILDING FLOOR DRAIN SUMP
SAMPLE PANEL H-16281 (F-10) P33-P104
SAMPLE PANEL H-16281 (F-11) P33-P104
FLOOR DRAIN SAMPLE TANK A019
CONDENSATE STORAGE TANK
CHEM. WASTE NEUTRALIZER TANK
COLLECTOR TANK A006
DISCHARGE CANAL
OFF GAS RECOMB. BLDG. FLOOR DRAINS
CONDENSATE TRANSFER PUMP AREA DRAIN TO RADWASTE
RADWASTE ADD-ON BUILDING EQUIP DRAIN SUMP B-A
FLOOR DRAIN DEMIN D029
RESIN TRAP D068
SPENT RESIN TANK A001B
RATE SET
DEMIN WATER
INSTRUMENT AIR
OIL FREE SERVICE AIR
VENT
TEST CONN.
CONDENSATE
SPENT RESIN
EVAP. CONCENTRATES LOCAL SHIELDING
RECIRCULATION LINE
FEED LINE
LOCAL VENT
OVERFLOW
FILL TIGER LOCK TANK
TIGER LOCK TANK
NORTH WALL
OUTSIDE
INSIDE
FILTER
C030
CRITICAL DOCUMENT
MPL NO. G11-1010
OVY2005 H16180
SOUTHERN COMPANY
"This document contains proprietary, confidential, and/or trade secret information of the subsidiaries of Southern Company or of third parties. It is intended for use only by employees of, or authorized contractors of, the subsidiaries of Southern Company. Unauthorized possession, use, distribution, copying, dissemination, or disclosure of any portion hereof is prohibited."
EDWIN I. HATCH NUCLEAR PLANT UNIT No.1
RADWASTE SYSTEM P&ID
SHEET NO. 5
Version: 34.0 | Date: 9-28-07
REVISED PER ABN ABN-H00731, VER. 1.0 (ADDED GRID COORDINATES)
DRAWN RLG | DESIGNED JWP | LOCATION | DRAWING NUMBER 10-502 H-16180 | VERSION 34.0
BY JLO | CHK'D TSL | APPR'D JMR | SEE MICROFILM FOR PREVIOUS REV. SIGNATURES
DATE 12-20-72 | SCALE None
DRAWING CATEGORY: CRITICAL

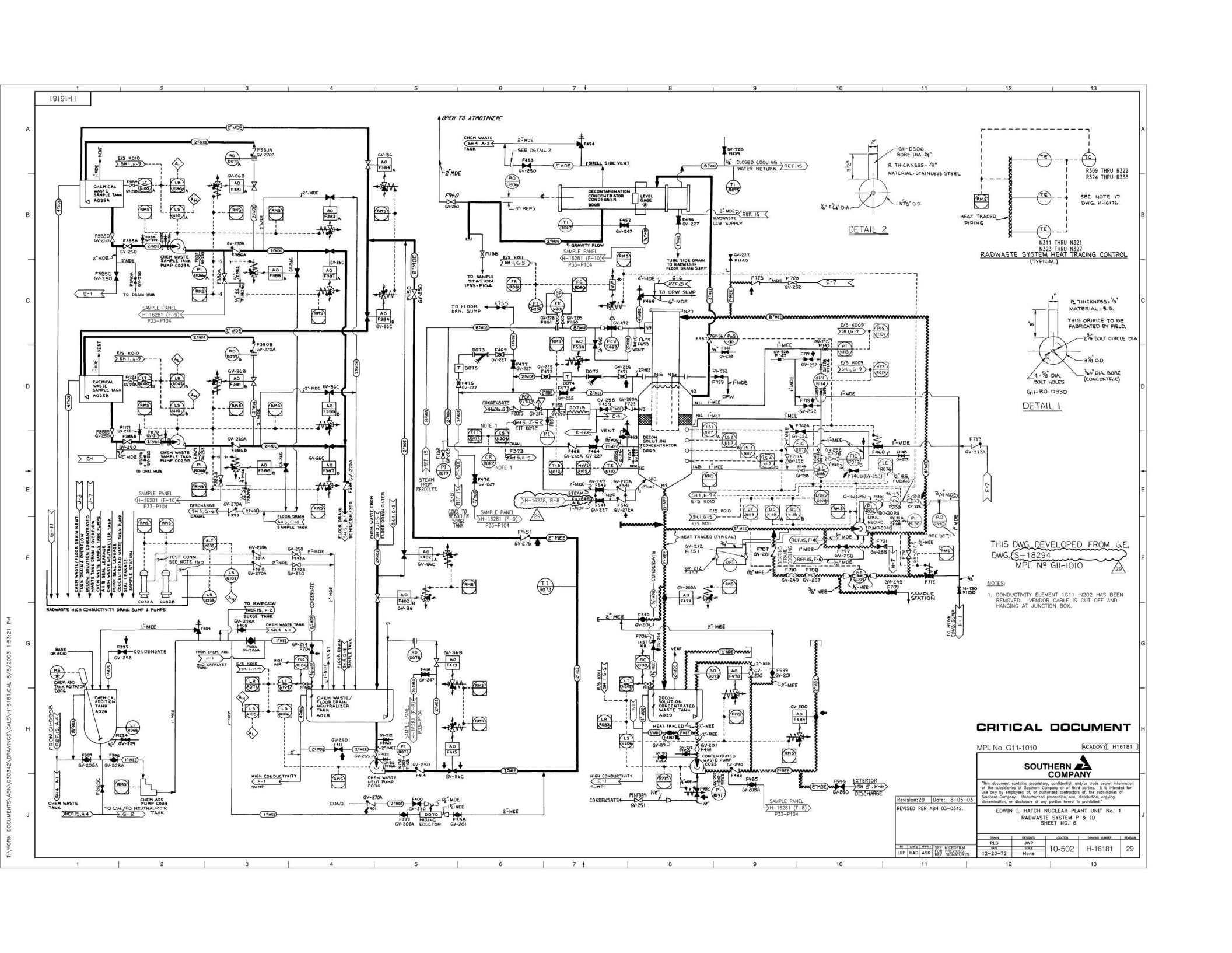
H-16181
OPEN TO ATMOSPHERE
CHEMICAL WASTE SAMPLE TANK A025A
CHEMICAL WASTE SAMPLE TANK A025B
CHEM WASTE SAMPLE TANK PUMP C029A
CHEM WASTE SAMPLE TANK PUMP C029B
SAMPLE PANEL H-16281 (F-9) P33-P104
SAMPLE PANEL H-16281 (F-10) P33-P104
TO DRAIN HUB
DISCHARGE SH 3, G-6 CANAL
FLOOR DRAIN SAMPLE TANK
RADWASTE HIGH CONDUCTIVITY DRAIN SUMP & PUMPS
CHEM WASTE/FLOOR DRAIN NEUT TANK A028
DECON SOLUTION CONCENTRATED WASTE TANK DRAIN & OVERFLOW
CHEM WASTE NEUTRALIZER TANK A/B SEAL LEAKAGE
CHEM WASTE NEUTRALIZER TANK PUMP CONCENTRATED WASTE PUMPS SEAL LEAKAGE
TEST CONN. SEE NOTE 1&2
C032A
C032B
TO RWBCCW SURGE TANK
REF 15, F-2
CHEM WASTE TANK SH 4 A-1
BASE OR ACID
CHEM ADD TANK AGITATOR D076
CHEMICAL ADDITION TANK A026
CHEM WASTE TANK
TO CW/FD NEUTRALIZER TANK
REF 15, A-4
G-2
FROM GIL-D396 REF 15, A-5
FROM CHEM. ADD. AND CATALYST TANK
CHEM WASTE/FLOOR DRAIN NEUTRALIZER TANK A028
CHEM WASTE NEUT PUMP C034
HIGH CONDUCTIVITY E-7 SUMP
COND.
MIXING EDUCTOR
CHEM WASTE FROM SH 3, G-5 FLOOR DRAIN FILTER
FLOOR DRAIN SH 5, B-1 DEMINERALIZER
CHEM WASTE TANK A-2
SEE DETAIL 2
SHELL SIDE VENT
DECONTAMINATION CONCENTRATOR CONDENSER B005
LEVEL GAGE
CLOSED COOLING WATER RETURN REF. 15
RADWASTE CCW SUPPLY
GRAVITY FLOW SAMPLE PANEL H-16281 (F-10) P33-P104
TUBE SIDE DRAIN TO RADWASTE FLOOR DRAIN SUMP
TO SAMPLE STATION P33-P104
TO DRW SUMP
TO FLOOR DRN. SUMP
STEAM FROM REBOILER
CONDENSATE
NOTE 1
DECON SOLUTION CONCENTRATOR D069
STEAM FILTERED AIR
COND TO REBOILER SURGE TANK
SAMPLE PANEL H-16281 (F-9) P33-P104
SH 5, J-5 CIT M092
SH 5, E-6
SH 5, E-10
SH 5, E-12
SH 5, F-6
SH 5, F-8
SH 5, G-6
SH 5, G-7
SH 5, H-7
SH 5, I-6
SH 5, I-9
SH 5, J-9
SH 1, G-5
SH 1, G-9
SH 1, H-7
SH 1, H-9
H-16238, B-8
HEAT TRACED (TYPICAL)
BEARING COOLING FROM CCW
SAMPLE STATION
TO HIGH CONDUCTIVITY SUMP E-7
CONCENTRATED WASTE PUMP C035
CONDENSATE
SAMPLE PANEL H-16281 (F-8) P33-P104
EXTERIOR DISCHARGE
DETAIL 2
DETAIL 1
RADWASTE SYSTEM HEAT TRACING CONTROL (TYPICAL)
HEAT TRACED PIPING
R309 THRU R322
R324 THRU R338
SEE NOTE 17 DWG. H-16176.
N311 THRU N321
N323 THRU N327
G11-D306
G11-RO-D330
THIS DWG DEVELOPED FROM G.E. DWG. S-18294
MPL Nº G11-1010
NOTES:
1. CONDUCTIVITY ELEMENT 1G11-N202 HAS BEEN REMOVED. VENDOR CABLE IS CUT OFF AND HANGING AT JUNCTION BOX.
CRITICAL DOCUMENT
MPL No. G11-1010
ACADOVY H16181
SOUTHERN COMPANY
"This document contains proprietary, confidential, and/or trade secret information of the subsidiaries of Southern Company or of third parties. It is intended for use only by employees of, or authorized contractors of, the subsidiaries of Southern Company. Unauthorized possession, use, distribution, copying, dissemination, or disclosure of any portion hereof is prohibited."
EDWIN I. HATCH NUCLEAR PLANT UNIT No. 1
RADWASTE SYSTEM P & ID
SHEET NO. 6
Revision:29 Date: 8-05-03
REVISED PER ABN 03-0342.
DRAWN RLG
DESIGNED JWP
LOCATION 10-502
DRAWING NUMBER H-16181
REVISION 29
DATE 12-20-72
SCALE None
BY LRP CHK'D HAD APPR'D ASK
SEE MICROFILM FOR PREVIOUS REV. SIGNATURES.
T:\WORK DOCUMENTS\ABN\030342\DRAWINGS\CALS\H16181.CAL 8/5/2003 1:53:21 PM

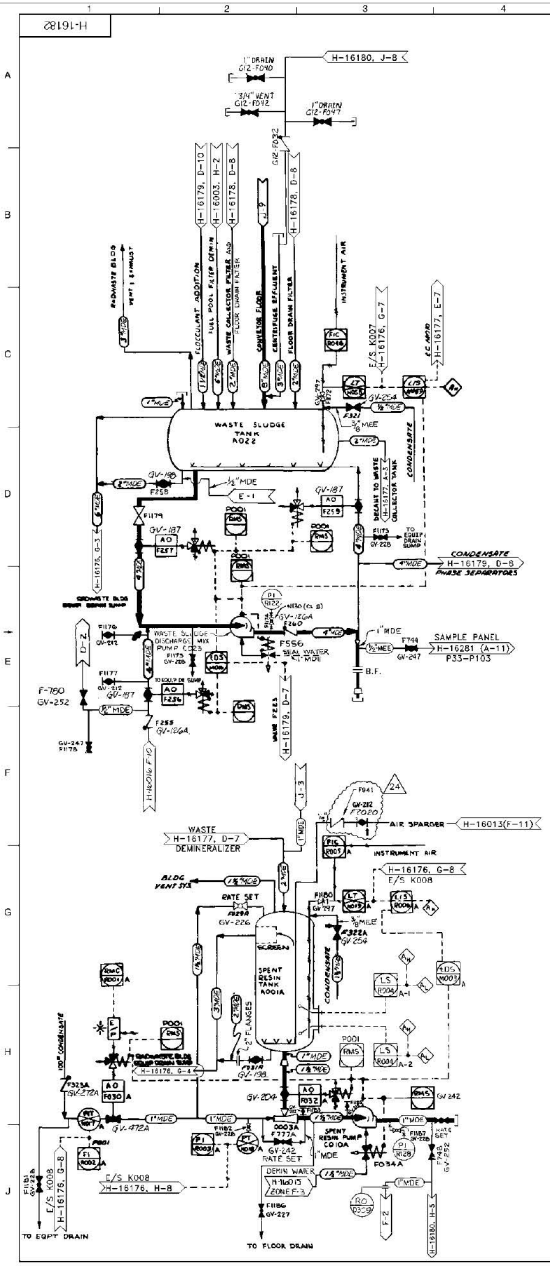

THIS DWG. DEVELOPED FROM G.E. DWG S-15361.

CRITICAL DOCUMENT

MPL No. G11-1010

ACAD(V)Y: H16182

SOUTHERN COMPANY

"This document contains proprietary, confidential, and/or trade secret information of the subsidiaries of Southern Company or of third parties. It is intended for use only by employees of or authorized contractors of, the subsidiaries of Southern Company. Unauthorized possession, use, distribution, copying, dissemination, or disclosure of any portion hereof, is prohibited."

EDWIN I. HATCH NUCLEAR PLANT UNIT No.1
RADWASTE SYSTEM P&ID
SHEET No.7

Revision: 24	Date: 04/20/04
REVISED PER ABN 1039801501-1.	

DESIGN	DRAWN	LOCATION	DRAWING NUMBER	REVISION
RLG	JWF			
SSR	RRJE	10-502	H-16182	24
12-20-72	None			

BY	DATE	APP'D	SEE MICROFILM FOR PREVIOUS REV. SIGNATURES.
JDK	CWM	DEW	

H-16188

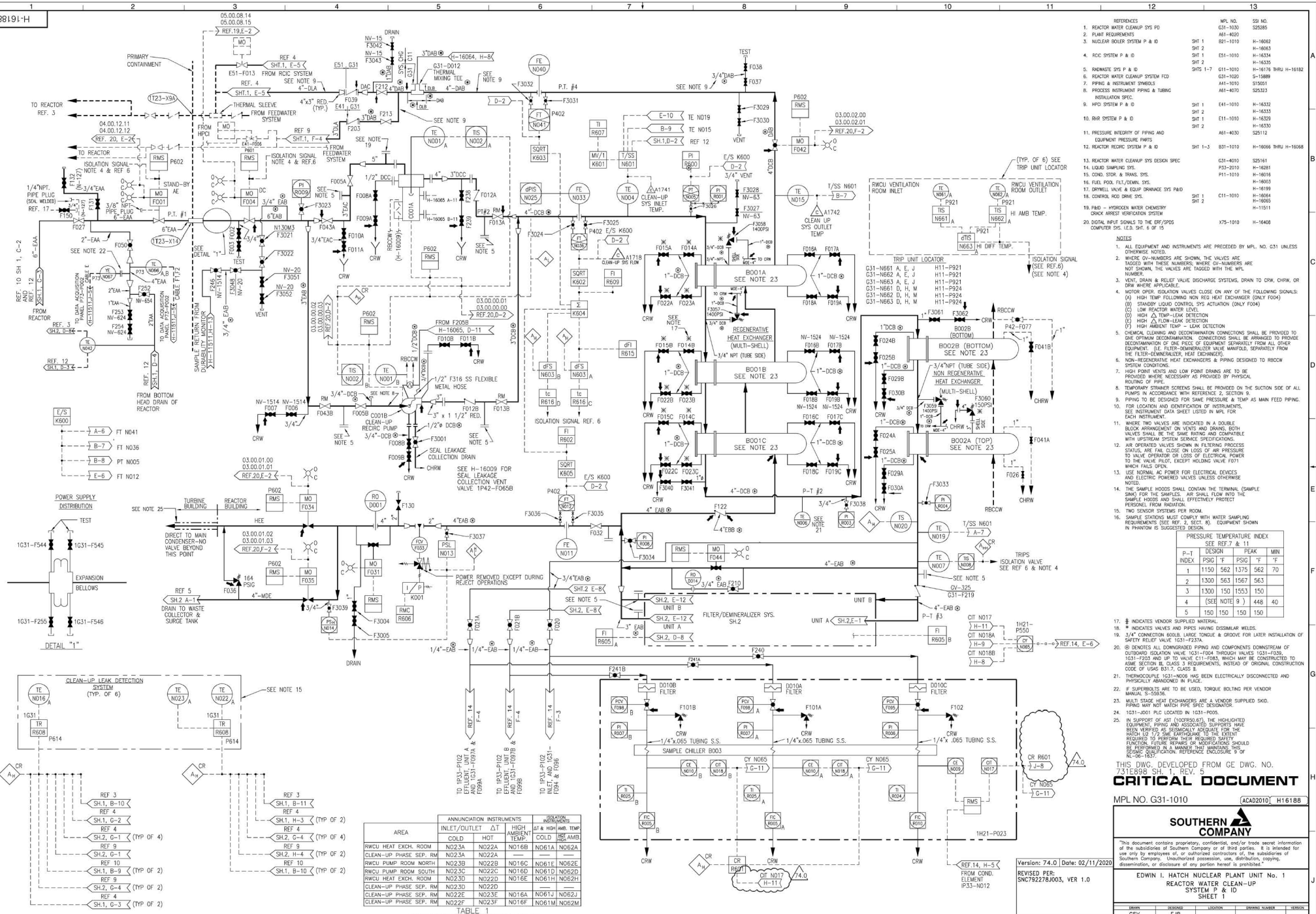

REFERENCES		MPL NO.	SSI NO.
1. REACTOR WATER CLEANUP SYS PD		G31-1030	S25285
2. PLANT REQUIREMENTS		A61-4020	
3. NUCLEAR BOILER SYSTEM P & ID	SHT 1	B21-1010	H-16062
	SHT 2		H-16063
4. RCIC SYSTEM P & ID	SHT 1	E51-1010	H-16334
	SHT 2		H-16335
5. RADWASTE SYS P & ID	SHTS 1-7	G11-1010	H-16176 THRU H-16182
6. REACTOR WATER CLEANUP SYSTEM FCD		G31-1020	S-15889
7. PIPING & INSTRUMENT SYMBOLS		A41-1010	S15001
8. PROCESS INSTRUMENT PIPING & TUBING INSTALLATION SPEC.		A61-4070	S25323
9. HPCI SYSTEM P & ID	SHT 1	E41-1010	H-16332
	SHT 2		H-16333
10. RHR SYSTEM P & ID	SHT 1	E11-1010	H-16329
	SHT 2		H-16330
11. PRESSURE INTEGRITY OF PIPING AND EQUIPMENT PRESSURE PARTS		A61-4030	S25112
12. REACTOR RECIRC SYSTEM P & ID	SHT 1-5	B31-1010	H-16066 THRU H-16068
13. REACTOR WATER CLEANUP SYS DESIGN SPEC		G31-4010	S25161
14. LIQUID SAMPLING SYS.		P33-2010	H-16281
15. COND. STOR. & TRANS. SYS.		P11-1010	H-16016
16. FUEL POOL FILT./DEMIN. SYS.			H-16003
17. DRYWELL VALVE & EQUIP DRAINAGE SYS P&ID			H-16199
18. CONTROL ROD DRIVE SYS.	SHT 1	C11-1010	H-16064
	SHT 2		H-16065
19. P&ID – HYDROGEN WATER CHEMISTRY (CRACK ARREST VERIFICATION SYSTEM			H-11511
20. DIGITAL INPUT SIGNALS TO THE ERF/SPDS COMPUTER SYS. I.E.D. SHT. 6 OF 15		X75-1010	H-16408

NOTES

1. ALL EQUIPMENT AND INSTRUMENTS ARE PRECEDED BY MPL. NO. G31 UNLESS OTHERWISE NOTED.
2. WHERE GV-NUMBERS ARE SHOWN, THE VALVES ARE TAGGED WITH THESE NUMBERS; WHERE GV-NUMBERS ARE NOT SHOWN, THE VALVES ARE TAGGED WITH THE MPL NUMBER.
3. VENT, DRAIN & RELIEF VALVE DISCHARGE SYSTEMS, DRAIN TO CRW, CHRW, OR DRW WHERE APPLICABLE.
4. MOTOR OPER. ISOLATION VALVES CLOSE ON ANY OF THE FOLLOWING SIGNALS:
   (A) HIGH TEMP FOLLOWING NON REG HEAT EXCHANGER (ONLY F004)
   (B) STANDBY LIQUID CONTROL SYS ACTUATION (ONLY F004)
   (C) LOW REACTOR WATER LEVEL
   (D) HIGH △ TEMP–LEAK DETECTION
   (E) HIGH △ FLOW–LEAK DETECTION
   (F) HIGH AMBIENT TEMP – LEAK DETECTION
5. CHEMICAL CLEANING AND DECONTAMINATION CONNECTIONS SHALL BE PROVIDED TO GIVE OPTIMUM DECONTAMINATION. CONNECTIONS SHALL BE ARRANGED TO PROVIDE DECONTAMINATION OF ONE PIECE OF EQUIPMENT SEPARATELY FROM ALL OTHER EQUIPMENT. (I.E. FILTER-DEMINERALIZER VALVE MANIFOLD SEPARATELY FROM THE FILTER–DEMINERALIZER, HEAT EXCHANGER).
6. NON–REGENERATIVE HEAT EXCHANGERS & PIPING DESIGNED TO RBCCW SYSTEM CONDITIONS.
7. HIGH POINT VENTS AND LOW POINT DRAINS ARE TO BE PROVIDED WHERE NECESSARY AS PROVIDED BY PHYSICAL ROUTING OF PIPE.
8. TEMPORARY STRAINER SCREENS SHALL BE PROVIDED ON THE SUCTION SIDE OF ALL PUMPS IN ACCORDANCE WITH REFERENCE 2, SECTION 9.
9. PIPING TO BE DESIGNED FOR SAME PRESSURE & TEMP AS MAIN FEED PIPING.
10. FOR LOCATION AND IDENTIFICATION OF INSTRUMENTS, SEE INSTRUMENT DATA SHEET LISTED IN MPL FOR EACH INSTRUMENT.
11. WHERE TWO VALVES ARE INDICATED IN A DOUBLE BLOCK ARRANGEMENT ON VENTS AND DRAINS, BOTH VALVES SHALL BE THE SAME RATING AND COMPATIBLE WITH UPSTREAM SYSTEM SERVICE SPECIFICATIONS.
12. AIR OPERATED VALVES SHOWN IN FILTERING PROCESS STATUS, ARE FAIL CLOSE ON LOSS OF AIR PRESSURE TO VALVE OPERATOR OR LOSS OF ELECTRICAL POWER TO THE VALVE PILOT, EXCEPT HOLDING VALVE F071 WHICH FAILS OPEN.
13. USE NORMAL AC POWER FOR ELECTRICAL DEVICES AND ELECTRIC POWERED VALVES UNLESS OTHERWISE NOTED.
14. THE SAMPLE HOODS SHALL CONTAIN THE TERMINAL (SAMPLE SINK) FOR THE SAMPLES. AIR SHALL FLOW INTO THE SAMPLE HOODS AND SHALL EFFECTIVELY PROTECT PERSONEL FROM RADIATION.
15. TWO SENSOR SYSTEMS PER ROOM.
16. SAMPLE STATIONS MUST COMPLY WITH WATER SAMPLING REQUIREMENTS (SEE REF. 2, SECT. 8). EQUIPMENT SHOWN IN PHANTOM IS SUGGESTED DESIGN.

PRESSURE TEMPERATURE INDEX SEE REF.7 & 11					
P–T	DESIGN		PEAK		MIN
INDEX	PSIG	°F	PSIG	°F	°F
1	1150	562	1375	562	70
2	1300	563	1567	563	
3	1300	150	1553	150	
4	(SEE NOTE 9)		448	40	
5	150	150	150	150	

17. ‡ INDICATES VENDOR SUPPLIED MATERIAL.
18. * INDICATES VALVES AND PIPES HAVING DISSIMILAR WELDS.
19. 1/4" CONNECTION 6010LB. LARGE TONGUE & GROOVE FOR LATER INSTALLATION OF SAFETY RELIEF VALVE 1C31-F237A.
20. ⑥ DENOTES ALL DOWNGRADED PIPING AND COMPONENTS DOWNSTREAM OF OUTBOARD ISOLATION VALVE 1G31-F004 THROUGH VALVES 1G31-F039, 1G31-F203 AND UP TO VALVE C11-F083, WHICH MAY BE CONSTRUCTED TO ASME SECTION III, CLASS 3 REQUIREMENTS, INSTEAD OF ORIGINAL CONSTRUCTION CODE OF USAS B31.7, CLASS III.
21. THERMOCOUPLE 1G31–N006 HAS BEEN ELECTRICALLY DISCONNECTED AND PHYSICALLY ABANDONED IN PLACE.
22. IF SUPERBOLTS ARE TO BE USED, TORQUE BOLTING PER VENDOR MANUAL S–55936.
23. MULTI STAGE HEAT EXCHANGERS ARE A VENDOR SUPPLIED SKID. PIPING MAY NOT MATCH PIPE SPEC DESIGNATION.
24. 1G31–J001 PLC LOCATED IN 1G31–P005.
25. IN SUPPORT OF AST (10CFR50.67), THE HIGHLIGHTED EQUIPMENT, PIPING AND ASSOCIATED SUPPORTS HAVE BEEN VERIFIED AS SEISMICALLY ADEQUATE FOR THE HATCH 1/2 1/2 SME EARTHQUAKE TO THE EXTENT REQUIRED TO PERFORM THEIR REQUIRED SAFETY FUNCTION. FUTURE REPAIRS OR MODIFICATIONS SHOULD BE PERFORMED IN A MANNER THAT MAINTAINS THIS SEISMIC QUALIFICATION. REFERENCE ENCLOSURE 9 OF NL–06–1837.

AREA	ANNUNCIATION INSTRUMENTS INLET/OUTLET ΔT COLD	HOT	HIGH AMBIENT TEMP.	ISOLATION INSTRUMENTS ΔT & HIGH AMB. TEMP. COLD	HOT HIGH AMB
RWCU HEAT EXCH. ROOM	N023A	N022A	N016B	N061A	N062A
CLEAN–UP PHASE SEP. RM	N023A	N022A	——	——	——
RWCU PUMP ROOM NORTH	N023B	N022B	N016C	N061E	N062E
RWCU PUMP ROOM SOUTH	N023C	N022C	N016D	N061D	N062D
RWCU HEAT EXCH. ROOM	N023D	N022D	N016E	N061H	N062H
CLEAN–UP PHASE SEP. RM	N023D	N022D	——	——	——
CLEAN–UP PHASE SEP. RM	N022E	N023E	N016A	N061J	N062J
CLEAN–UP PHASE SEP. RM	N022F	N023F	N016F	N061M	N062M

TABLE 1
THERMOCOUPLE SENSING AREAS
LEAK DETECTION SENSING INSTRUMENTATION

THIS DWG. DEVELOPED FROM GE DWG. NO. 731E898 SH. 1, REV. 5

CRITICAL DOCUMENT

MPL NO. G31-1010 ACAD2010 H16188

SOUTHERN COMPANY

"This document contains proprietary, confidential, and/or trade secret information of the subsidiaries of Southern Company or of third parties. It is intended for use only by employees of, or authorized contractors of, the subsidiaries of Southern Company. Unauthorized possession, use, distribution, copying, dissemination, or disclosure of any portion hereof is prohibited."

Version: 74.0 Date: 02/11/2020

REVISED PER: SNC79227BJ003, VER 1.0

EDWIN I. HATCH NUCLEAR PLANT UNIT No. 1
REACTOR WATER CLEAN–UP
SYSTEM P & ID
SHEET 1

DRAWN	DESIGNED	LOCATION	DRAWING NUMBER	VERSION
GSV	EJR	10-502	H-16188	74.0
DATE	SCALE			
10–14–72	None			

APP'D GTR | CHK'D HRB | APVD. JMC

DWG CATEGORY: CRITICAL

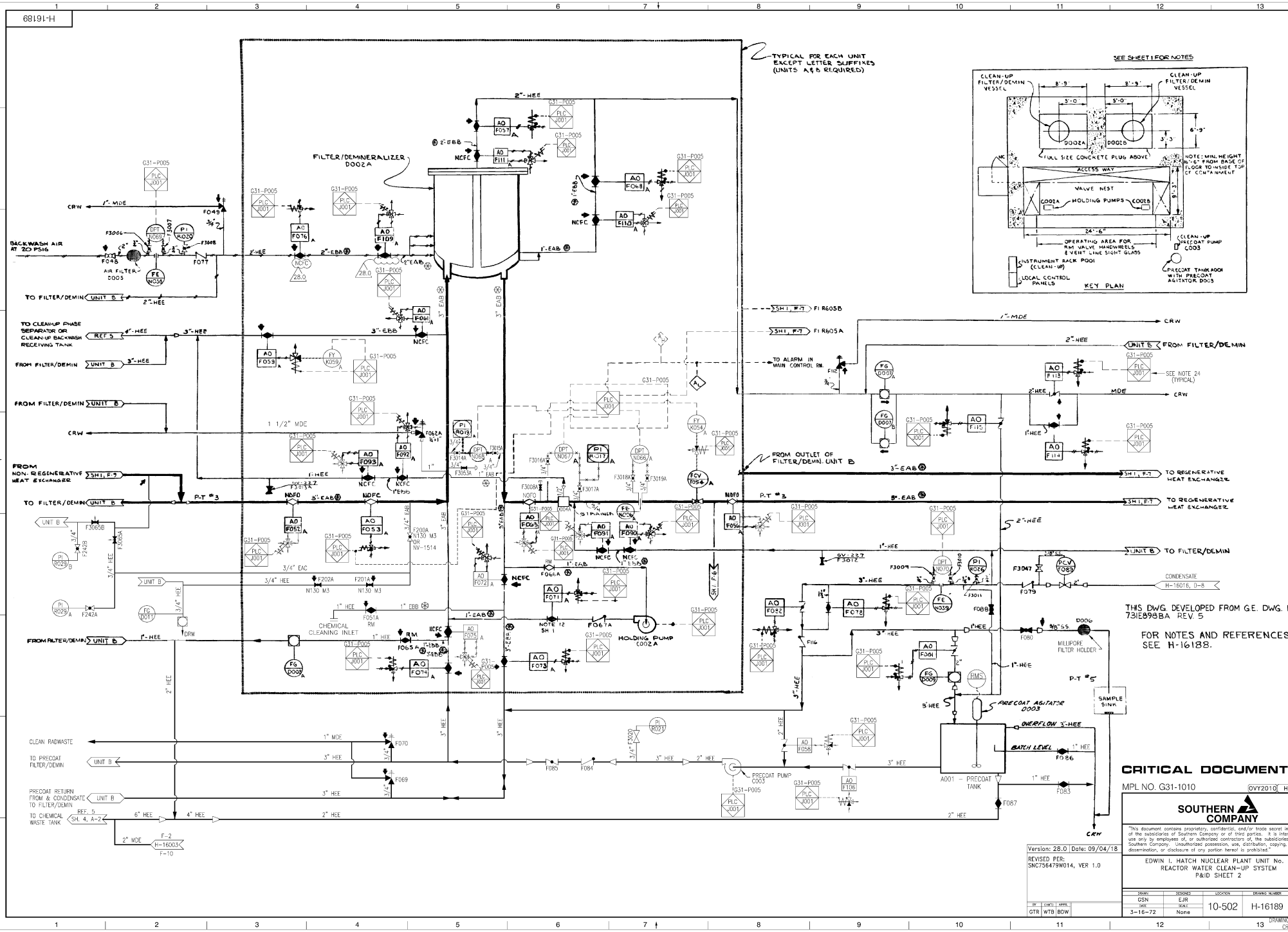
H-16189
TYPICAL FOR EACH UNIT EXCEPT LETTER SUFFIXES (UNITS A & B REQUIRED)
FILTER/DEMINERALIZER D002A
SEE SHEET 1 FOR NOTES
CLEAN-UP FILTER/DEMIN VESSEL
D002A
D002B
FULL SIZE CONCRETE PLUG ABOVE
ACCESS WAY
VALVE NEST
HOLDING PUMPS C002A C002B
OPERATING AREA FOR RM VALVE HANDWHEELS & EVENT LINE SIGHT GLASS
INSTRUMENT RACK P001 (CLEAN-UP)
LOCAL CONTROL PANELS
CLEAN-UP PRECOAT PUMP C003
PRECOAT TANK A001 WITH PRECOAT AGITATOR D003
KEY PLAN
BACKWASH AIR AT 20 PSIG
AIR FILTER D005
TO FILTER/DEMIN UNIT B
TO CLEAN-UP PHASE SEPARATOR OR CLEAN-UP BACKWASH RECEIVING TANK
FROM FILTER/DEMIN UNIT B
CRW
FROM NON-REGENERATIVE HEAT EXCHANGER
TO REGENERATIVE HEAT EXCHANGER
FROM OUTLET OF FILTER/DEMIN. UNIT B
P-T #3
P-T #5
CHEMICAL CLEANING INLET
HOLDING PUMP C002A
PRECOAT AGITATOR D003
PRECOAT PUMP C003
A001 - PRECOAT TANK
MILLIPORE FILTER HOLDER
SAMPLE SINK
CONDENSATE
OVERFLOW
BATCH LEVEL
CLEAN RADWASTE
TO PRECOAT FILTER/DEMIN
PRECOAT RETURN FROM & CONDENSATE TO FILTER/DEMIN
TO CHEMICAL WASTE TANK
THIS DWG. DEVELOPED FROM G.E. DWG. NO. 731E898BA REV. 5
FOR NOTES AND REFERENCES SEE H-16188.
CRITICAL DOCUMENT
MPL NO. G31-1010
QVY2010 H16189
SOUTHERN COMPANY
"This document contains proprietary, confidential, and/or trade secret information of the subsidiaries of Southern Company or of third parties. It is intended for use only by employees of, or authorized contractors of, the subsidiaries of Southern Company. Unauthorized possession, use, distribution, copying, dissemination, or disclosure of any portion hereof is prohibited."
EDWIN I. HATCH NUCLEAR PLANT UNIT No. 1
REACTOR WATER CLEAN-UP SYSTEM
P&ID SHEET 2
Version: 28.0 Date: 09/04/18
REVISED PER: SNC756479W014, VER 1.0
GTR WTB BDW
DRAWN GSN
DESIGNED EJR
DATE 3-16-72
SCALE None
LOCATION 10-502
DRAWING NUMBER H-16189
VERSION 28.0
DRAWING CATEGORY: CRITICAL

H-16239 SHEET 1

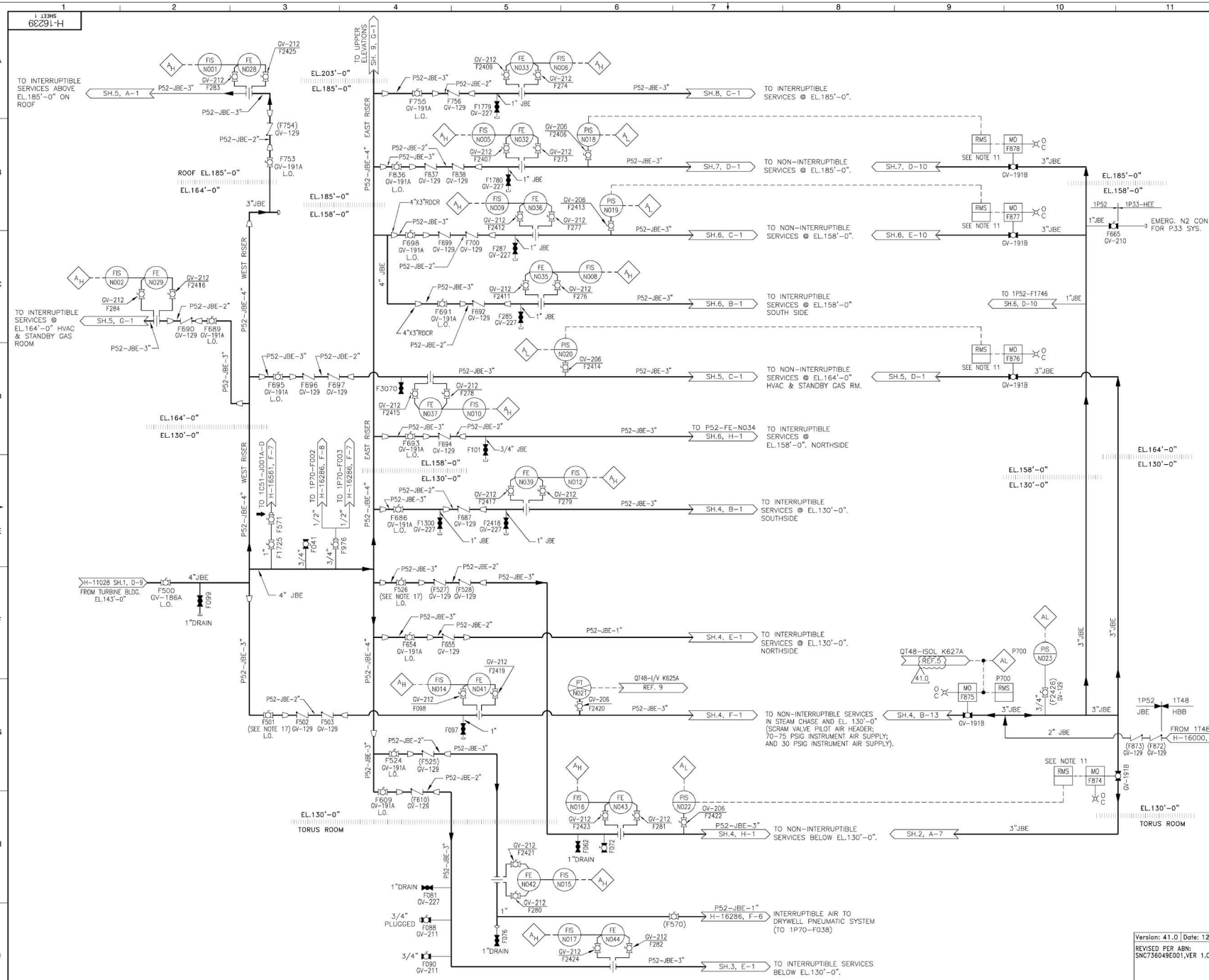

LEGEND:

*-WHERE SHOWN, AIR SUPPLY VALVES "AS#" ARE PREFIXED BY EQUIPMENT MPL NUMBER SERVED. EXAMPLE - 1T41-F002A-AS1.

(FXXX)-PARENTHETICAL MPL NUMBERS DENOTE THAT THOUGH MPL NUMBERS ARE ASSOCIATED WITH THESE VALVES, THEY ARE NOT LABELED IN THE FIELD.

L.O./L.C.-LOCKED OPEN/LOCKED CLOSED

LWO/LWC-LOCK WIRED OPEN/LOCK WIRED CLOSED

H.R.-HANDLE REMOVED

NOTES

1. ALL EQUIPMENT AND INSTRUMENT NUMBERS ON THIS DRAWING ARE PRECEDED BY MPL P52 UNLESS OTHERWISE NOTED. EXAMPLE: P52-F500.
2. ALL CHECK VALVES ARE SPRING LOADED LIFT CHECKS WITH HARD SEAT & SOFT DISC INSERT, WITH 1/2 LB. CRACKING PRESSURE.
3. ANNUNCIATORS FOR HIGH FLOW ALARMS & LOW PRESSURE ALARMS ARE LOCATED IN THE MAIN CONTROL ROOM.
4. IF AIR IS NOT AVAILABLE FROM THE COMPRESSORS, THE AIR RECEIVERS WILL SUPPLY AIR TO EVOLVE THE NON-INTERRUPTIBLE SERVICE VALVES TO MAKE UP VALVE AIR-OPERATOR LEAKAGE, & PROVIDE A MOTIVE AIR SOURCE.
5. DELETED
6. *DELETED*
7. PIPE OR TUBE DOWNSTREAM OF THE SPEC. CHANGE SHALL CONFORM TO SHEET 604 OF DWG. # A-11000 WHERE NOTED.
8. *DELETED*
9. *DELETED*
10. *DELETED*
11. MOTOR OPERATED VALVES ON NITROGEN BACK-UP SUPPLY LINES OPEN ON NON-INTERRUPTIBLE INST. AIR HEADER LOW PRESSURE.
12. *DELETED*
13. *DELETED*
14. ALTHOUGH NOT A DESIGN REQUIREMENT, THESE VALVES ARE CONNECTED TO AND SUPPLIED BY A NON-INTERRUPTIBLE AIR SUPPLY.
15. INSTRUMENT AIR TO CRD SYSTEM VALVE POSITIONS ARE SHOWN AS NOTED IN SYSTEM OPERATING PROCEDURES. OPERATIONS TO DETERMINE VALVE LINEUP AS NEEDED.
16. INSTRUMENT AIR ISOLATION VALVES IN THE G31 AND G41 DEMIN VALVE NESTS AND C.U.P.S. MIXING PUMP ROOM ARE NOT TAGGED AND THE SEQUENCE SHOWN ON THE AIR HEADERS IS UNVERIFIED. CAUTION SHOULD BE USED IF THESE VALVE POSITIONS ARE CHANGED. USE OF EQUIPMENT AIR SUPPLY VALVES ("AS1") IS RECOMMENDED.
17. FOR LOCATIONS 1P52-F501 AND 1P52-F526, ITEM NUMBER 601354, CAN BE USED IN LIEU OF THE GV-191A VALVE.

REFERENCES

REFERENCE	MPL. NO.	S.S. NO.
1. REACTOR BLDG. INSTRUMENT AIR SYSTEM P&ID	P52-1020	H-16239 SH.1-9
2. PIPING & INSTRUMENT SYMBOLS	A41-1010	S-15051
3. PLANT INSTRUMENT AIR SYSTEM DIAGRAM	P52-1010	H-11028
4. INSTRUMENT INSTALLATION DETAILS		A-16237
5. MISC. AIR INSTRUMENT SERVICE SYSTEM P51 AND P52 ELEMENTARY DIAGRAM.		H-17092

WORK WITH SHEETS 2 THROUGH 9

CRITICAL DOCUMENT

MPL No. P52-1020

ACAD2010 H1623901

SOUTHERN COMPANY

"This document contains proprietary, confidential, and/or trade secret information of the subsidiaries of Southern Company or of third parties. It is intended for use only by employees of, or authorized contractors of, the subsidiaries of Southern Company. Unauthorized possession, use, distribution, copying, dissemination, or disclosure of any portion hereof is prohibited."

EDWIN I. HATCH NUCLEAR PLANT UNIT No. 1
REACTOR BUILDING
INSTRUMENT AIR SYSTEM P&ID
Sheet 1

Version: 41.0 Date: 12/15/15

REVISED PER ABN: SNC736049E001,VER 1.0

BY	CHK'D	APPR.
GTR	FOB	JTL

DRAWN	DESIGNED	LOCATION	DRAWING NUMBER	VERSION
CED	RCB	10-502	H-16239 SHEET 1	41.0
DATE 5-18-71	SCALE NONE			

DWG CATEGORY: CRITICAL

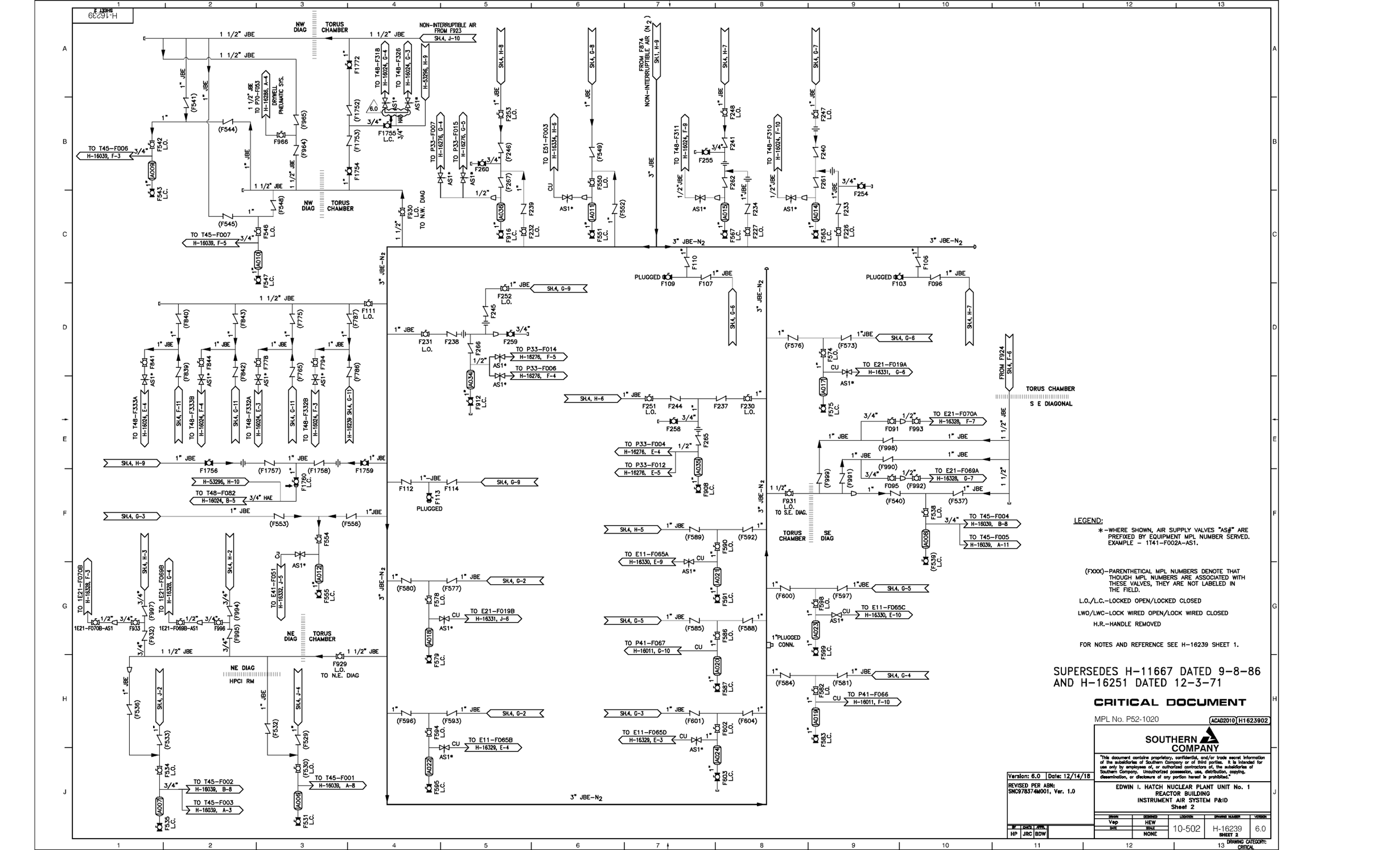
H-16239 SHEET 2
NW DIAG
TORUS CHAMBER
NON-INTERRUPTIBLE AIR FROM F923
SH.4, J-10
1 1/2" JBE
1" JBE
TO T45-F006 H-16039, F-3
TO T45-F007 H-16039, F-5
NW DIAG
TORUS CHAMBER
1 1/2" JBE
3" JBE-N2
PLUGGED
F109
F107
F110
F103
F096
F106
SH.4, G-6
SH.4, H-7
SH.4, G-9
SH.4, H-6
SH.4, H-9
SH.4, G-3
SH.4, H-5
SH.4, G-5
SH.4, G-2
SH.4, G-4
SH.4, H-2
SH.4, J-4
SH.4, H-3
TO P33-F014 H-16276, F-5
TO P33-F006 H-16276, F-4
TO P33-F004 H-16276, E-4
TO P33-F012 H-16276, E-5
TO E21-F019A H-16331, G-6
TO E21-F070A H-16328, F-7
TO E21-F069A H-16328, G-7
TO T45-F004 H-16039, B-8
TO T45-F005 H-16039, A-11
TO E11-F065A H-16330, E-9
TO E21-F019B H-16331, J-6
TO E11-F065C H-16330, E-10
TO P41-F067 H-16011, G-10
TO P41-F066 H-16011, F-10
TO E11-F065B H-16329, E-4
TO E11-F065D H-16329, E-3
TO T45-F002 H-16039, B-8
TO T45-F003 H-16039, A-3
TO T45-F001 H-16039, A-8
TO 1E21-F070B H-16328, F-3
TO 1E21-F069B H-16328, G-4
TO T48-F082 H-16024, B-5
TO E41-F051 H-16332, J-5
FROM F874 NON-INTERRUPTIBLE AIR (N2)
SH.1, H-9
FROM F924
SH.4, F-6
TORUS CHAMBER S E DIAGONAL
TORUS CHAMBER SE DIAG
NE DIAG
TORUS CHAMBER
NE DIAG HPCI RM
F929 L.O. TO N.E. DIAG
F931 L.O. TO S.E. DIAG.
F930 L.O. TO N.W. DIAG
1 1/2" JBE TO P70-F003 H-16286, A-4 DRYWELL PNEUMATIC SYS.
TO T48-F318 H-16024, G-4
TO T48-F326 H-16024, G-3
H-53296, H-9
TO T48-F311 H-16024, F-9
TO T48-F310 H-16024, F-10
TO E51-F003 H-16334, H-6
TO P33-F007 H-16276, G-4
TO P33-F015 H-16276, G-5
H-53296, H-10
H-16239 SH.4, C-11
1E21-F070B
1E21-F069B-AS1
1E21-F069B
1E21-F070B-AS1
AS1*
HAE
CU
LEGEND:
*-WHERE SHOWN, AIR SUPPLY VALVES "AS#" ARE PREFIXED BY EQUIPMENT MPL NUMBER SERVED. EXAMPLE - 1T41-F002A-AS1.
(FXXX)-PARENTHETICAL MPL NUMBERS DENOTE THAT THOUGH MPL NUMBERS ARE ASSOCIATED WITH THESE VALVES, THEY ARE NOT LABELED IN THE FIELD.
L.O./L.C.-LOCKED OPEN/LOCKED CLOSED
LWO/LWC-LOCK WIRED OPEN/LOCK WIRED CLOSED
H.R.-HANDLE REMOVED
FOR NOTES AND REFERENCE SEE H-16239 SHEET 1.
SUPERSEDES H-11667 DATED 9-8-86 AND H-16251 DATED 12-3-71
CRITICAL DOCUMENT
MPL No. P52-1020
ACAD2010 H1623902
SOUTHERN COMPANY
"This document contains proprietary, confidential, and/or trade secret information of the subsidiaries of Southern Company or of third parties. It is intended for use only by employees of, or authorized contractors of, the subsidiaries of Southern Company. Unauthorized possession, use, distribution, copying, dissemination, or disclosure of any portion hereof is prohibited."
EDWIN I. HATCH NUCLEAR PLANT UNIT No. 1
REACTOR BUILDING
INSTRUMENT AIR SYSTEM P&ID
Sheet 2
Version: 6.0 Date: 12/14/18
REVISED PER ABN: SNC978374M001, Ver. 1.0
BY HP CHK'D JRC APP'D BDW
DRAWN Vap
DESIGNED HEW
DATE
SCALE NONE
LOCATION 10-502
DRAWING NUMBER H-16239 SHEET 2
VERSION 6.0
DRAWING CATEGORY: CRITICAL

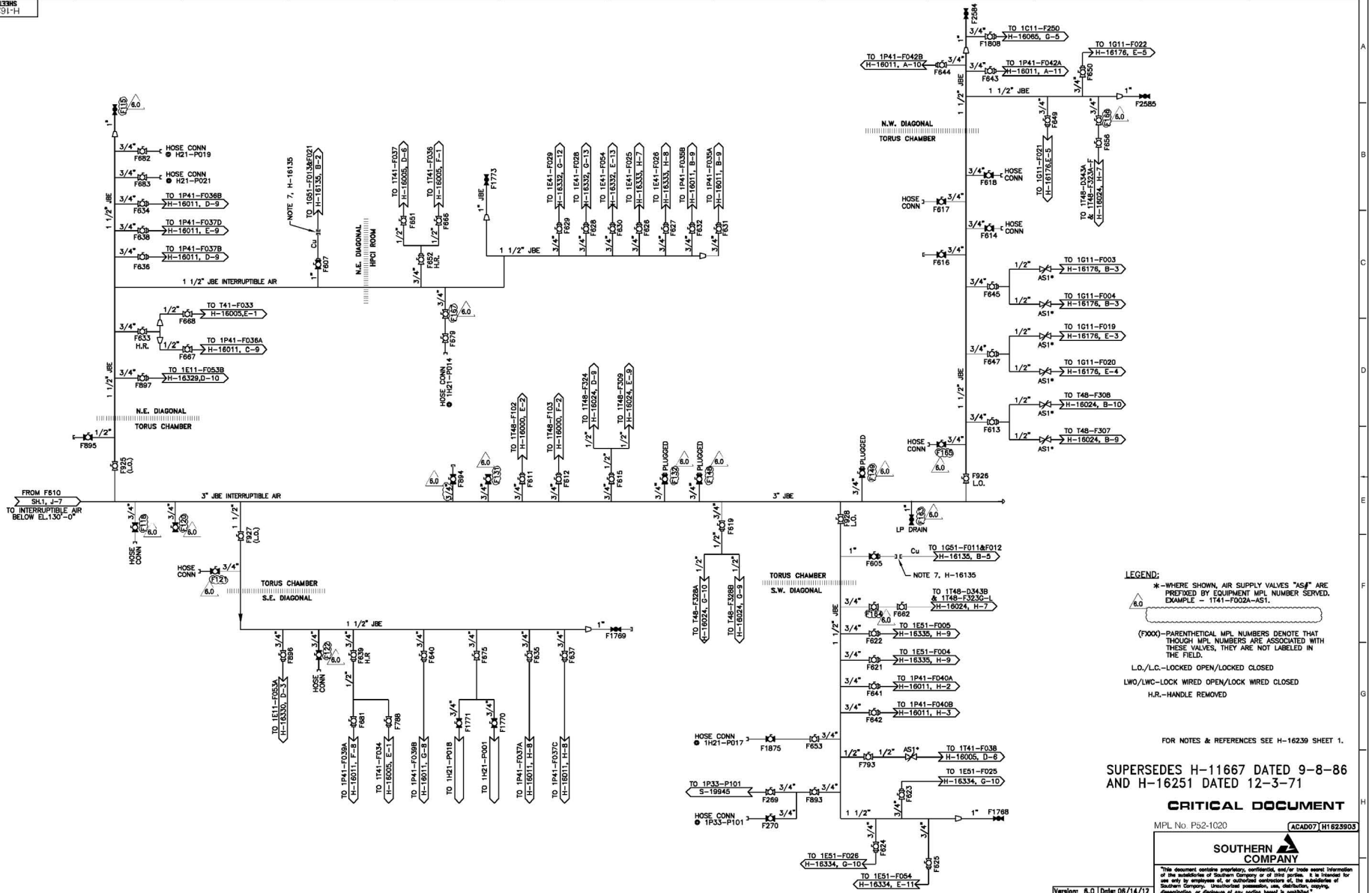
SHEET 3
H-16239
FROM F610
SH.1, J-7
TO INTERRUPTIBLE AIR BELOW EL.130'-0"
3" JBE INTERRUPTIBLE AIR
3" JBE
1 1/2" JBE INTERRUPTIBLE AIR
1 1/2" JBE
N.E. DIAGONAL TORUS CHAMBER
N.E. DIAGONAL HPCI ROOM
N.W. DIAGONAL TORUS CHAMBER
S.E. DIAGONAL TORUS CHAMBER
S.W. DIAGONAL TORUS CHAMBER
HOSE CONN @ H21-P019
HOSE CONN @ H21-P021
TO 1P41-F036B H-16011, D-9
TO 1P41-F037D H-16011, E-9
TO 1P41-F037B H-16011, D-9
TO 1G51-F013&F021 H-16135, B-2
NOTE 7, H-16135
TO 1T41-F037 H-16005, D-6
TO 1T41-F035 H-16005, F-1
TO 1E41-F028 H-16332, G-12
TO 1E41-F028 H-16332, G-13
TO 1E41-F054 H-16332, E-13
TO 1E41-F025 H-16333, H-7
TO 1E41-F026 H-16333, H-8
TO 1P41-F035B H-16011, B-9
TO 1P41-F035A H-16011, B-9
TO T41-F033 H-16005,E-1
TO 1P41-F036A H-16011, C-9
TO 1E11-F053B H-16329,D-10
HOSE CONN @ 1H21-P014
TO T48-F102 H-16000, E-2
TO T48-F103 H-16000, F-2
TO T48-F324 H-16024, D-9
TO T48-F309 H-16024, E-9
PLUGGED
TO 1E11-F053A H-16330, D-3
TO 1P41-F039A H-16011, F-8
TO 1T41-F034 H-16005, E-1
TO 1P41-F039B H-16011, G-8
TO 1H21-P018
TO 1H21-P001
TO 1P41-F037A H-16011, H-8
TO 1P41-F037C H-16011, H-8
TO T48-F328A H-16024, G-10
TO T48-F328B H-16024, G-9
HOSE CONN @ 1H21-P017
TO 1P33-P101 S-19945
HOSE CONN @ 1P33-P101
TO 1T41-F038 H-16005, D-8
TO 1E51-F025 H-16334, G-10
TO 1E51-F026 H-16334, G-10
TO 1E51-F054 H-16334, E-11
TO 1C11-F250 H-16065, G-5
TO 1P41-F042B H-16011, A-10
TO 1P41-F042A H-16011, A-11
TO 1G11-F022 H-16176, E-5
TO 1G11-F021 H-16176,E-5
TO T48-F343A & T48-F323A-F H-16024, H-7
HOSE CONN
TO 1G11-F003 H-16176, B-3
TO 1G11-F004 H-16176, B-3
TO 1G11-F019 H-16176, E-3
TO 1G11-F020 H-16176, E-4
TO T48-F308 H-16024, B-10
TO T48-F307 H-16024, B-9
AS1*
LP DRAIN
TO 1G51-F011&F012 H-16135, B-5
NOTE 7, H-16135
TO T48-F343B & T48-F323C-I H-16024, H-7
TO 1E51-F005 H-16335, H-9
TO 1E51-F004 H-16335, H-9
TO 1P41-F040A H-16011, H-2
TO 1P41-F040B H-16011, H-3
TO 1T41-F038 H-16005, D-8
TO 1E51-F025 H-16334, G-10
TO 1E51-F026 H-16334, G-10
TO 1E51-F054 H-16334, E-11
LEGEND:
*-WHERE SHOWN, AIR SUPPLY VALVES "AS#" ARE PREFIXED BY EQUIPMENT MPL NUMBER SERVED. EXAMPLE - 1T41-F002A-AS1.
6.0
(FXXX)-PARENTHETICAL MPL NUMBERS DENOTE THAT THOUGH MPL NUMBERS ARE ASSOCIATED WITH THESE VALVES, THEY ARE NOT LABELED IN THE FIELD.
L.O./L.C.-LOCKED OPEN/LOCKED CLOSED
LWO/LWC-LOCK WIRED OPEN/LOCK WIRED CLOSED
H.R.-HANDLE REMOVED
FOR NOTES & REFERENCES SEE H-16239 SHEET 1.
SUPERSEDES H-11667 DATED 9-8-86 AND H-16251 DATED 12-3-71
CRITICAL DOCUMENT
MPL No. P52-1020
ACAD07 H1623903
SOUTHERN COMPANY
This document contains proprietary, confidential, and/or trade secret information of the subsidiaries of Southern Company or of third parties. It is intended for use only by employees of, or authorized contractors of, the subsidiaries of Southern Company. Unauthorized possession, use, distribution, copying, dissemination, or disclosure of any portion hereof is prohibited.
EDWIN I. HATCH NUCLEAR PLANT UNIT No. 1
REACTOR BUILDING
INSTRUMENT AIR SYSTEM P&ID
Sheet 3 of 9
Version: 6.0 Date: 06/14/12
REVISED PER ABN-H02682, VER. 1.0
BgThgpn
HEW
No Scale
10-502
H-16239
SHEET 3
6.0
DRAWING CATEGORY: CRITICAL

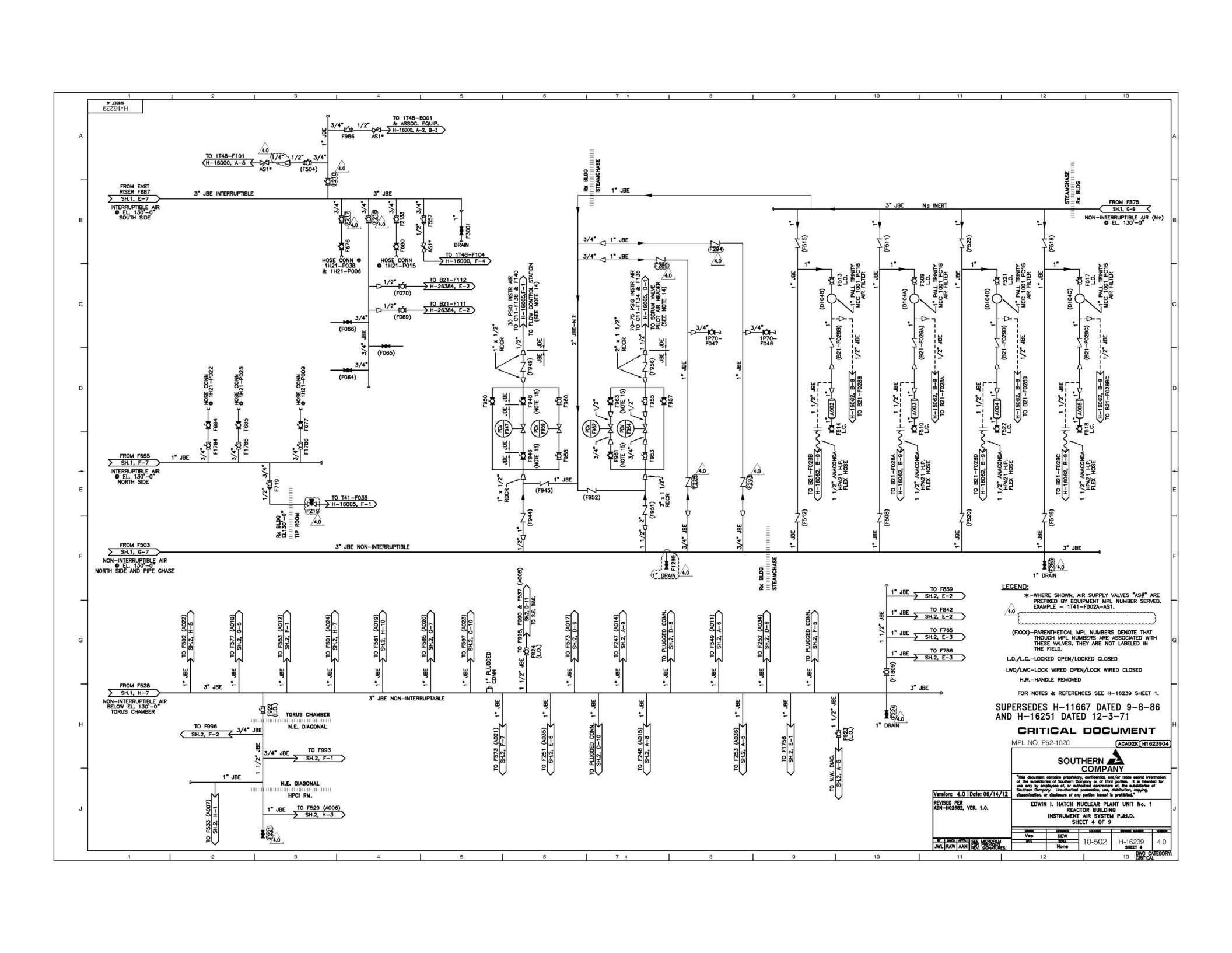
H-16239
SHEET 4
FROM EAST RISER F687
SH.1, E-7
INTERRUPTIBLE AIR
EL. 130'-0"
SOUTH SIDE
3" JBE INTERRUPTIBLE
TO 1T48-B001 & ASSOC. EQUIP. H-16000, A-2, B-3
TO 1T48-F101 H-16000, A-5
TO 1T48-F104 H-16000, F-4
HOSE CONN 1H21-P038 & 1H21-P006
HOSE CONN 1H21-P015
DRAIN
TO B21-F112 H-26384, E-2
TO B21-F111 H-26384, E-2
FROM F655
SH.1, F-7
INTERRUPTIBLE AIR
EL. 130'-0"
NORTH SIDE
HOSE CONN 1H21-P022
HOSE CONN 1H21-P025
HOSE CONN 1H21-P009
Rx BLDG EL 130'-0"
TIP ROOM
TO T41-F035 H-16005, F-1
FROM F503
SH.1, G-7
NON-INTERRUPTIBLE AIR
EL. 130'-0"
NORTH SIDE AND PIPE CHASE
3" JBE NON-INTERRUPTIBLE
FROM F528
SH.1, H-7
NON-INTERRUPTIBLE AIR
BELOW EL. 130'-0"
TORUS CHAMBER
3" JBE NON-INTERRUPTABLE
TORUS CHAMBER
N.E. DIAGONAL
HPCI RM.
N.E. DIAGONAL
TO F996 SH.2, F-2
TO F993 SH.2, F-1
TO F529 (A006) SH.2, H-3
TO F533 (A007) SH.2, H-1
30 PSIG INSTR AIR TO C11-F138 & F140 FROM 1H16-P045(F-1)
TO SCRAM VALVE PILOT AIR HEADER (SEE NOTE 14)
70-75 PSIG INSTR AIR TO C11-F134 & F136 FROM 1H16-P045(D-1)
TO SCRAM VALVE PILOT AIR HEADER (SEE NOTE 14)
2" JBE-N2
Rx BLDG STEAMCHASE
1" JBE
3" JBE N2 INERT
FROM F875
SH.1, G-9
NON-INTERRUPTIBLE AIR (N2)
EL. 130'-0"
STEAMCHASE Rx BLDG
TO B21-F028B H-16082, B-9
TO B21-F028A H-16082, B-9
TO B21-F028D H-16082, B-9
TO B21-F028C H-16082, B-9
1 1/2" ANACONDA HPA21 H.P. FLEX HOSE
1" PALL TRINITY MICRO TPC16 AIR FILTER
1" DRAIN
TO F839 SH.2, E-2
TO F842 SH.2, E-2
TO F765 SH.2, E-3
TO F786 SH.2, E-3
TO F592 (A022) SH.2, H-5
TO F577 (A019) SH.2, G-5
TO F553 (A012) SH.2, F-1
TO F601 (A024) SH.2, H-7
TO F581 (A019) SH.2, H-10
TO F585 (A020) SH.2, G-7
TO F597 (A023) SH.2, G-10
1" PLUGGED CONN
TO F398, F990 & F537 (A008) SH.2, D-11
TO S.E. DIAG.
TO F573 (A017) SH.2, D-9
TO F247 (A014) SH.2, A-9
TO PLUGGED CONN. SH.2, D-8
TO F549 (A011) SH.2, A-6
TO F256 (A034) SH.2, D-6
TO PLUGGED CONN. SH.2, F-5
TO F573 (A021) SH.2, F-7
TO F251 (A035) SH.2, E-6
TO PLUGGED CONN. SH.2, D-10
TO F248 (A015) SH.2, A-8
TO F253 (A036) SH.2, A-5
TO F1756 SH.2, E-1
TO N.W. DIAG. SH.2, A-5
LEGEND:
*-WHERE SHOWN, AIR SUPPLY VALVES "AS#" ARE PREFIXED BY EQUIPMENT MPL NUMBER SERVED. EXAMPLE - 1T41-F002A-AS1.
(FXXX)-PARENTHETICAL MPL NUMBERS DENOTE THAT THOUGH MPL NUMBERS ARE ASSOCIATED WITH THESE VALVES, THEY ARE NOT LABELED IN THE FIELD.
L.O./L.C.-LOCKED OPEN/LOCKED CLOSED
LWO/LWC-LOCK WIRED OPEN/LOCK WIRED CLOSED
H.R.-HANDLE REMOVED
FOR NOTES & REFERENCES SEE H-16239 SHEET 1.
SUPERSEDES H-11667 DATED 9-8-86 AND H-16251 DATED 12-3-71
CRITICAL DOCUMENT
MPL NO P52-1020
ACAD2K H1623904
SOUTHERN COMPANY
This document contains proprietary, confidential, and/or trade secret information of the subsidiaries of Southern Company or of third parties. It is intended for use only by employees of, or authorized contractors of, the subsidiaries of Southern Company. Unauthorized possession, use, distribution, copying, dissemination, or disclosure of any portion hereof is prohibited.
EDWIN I. HATCH NUCLEAR PLANT UNIT No. 1
REACTOR BUILDING
INSTRUMENT AIR SYSTEM P.&I.D.
SHEET 4 OF 9
Version: 4.0 Date: 06/14/12
REVISED PER ABN-H02682, VER. 1.0.
JWL RAW AAH
SEE MICROFILM FOR PREVIOUS REV. SIGNATURES.
Vep HEW
MPL None
10-502
H-16239
SHEET 4
4.0
DWG CATEGORY: CRITICAL

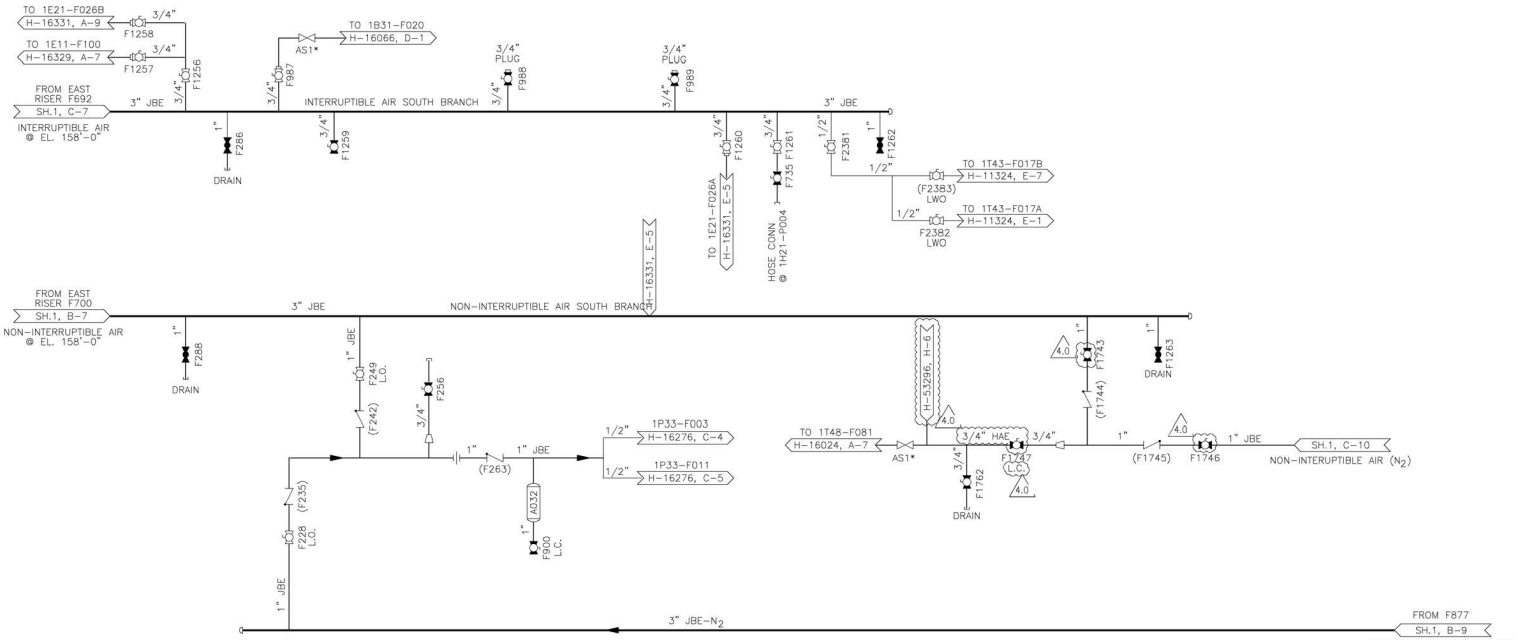

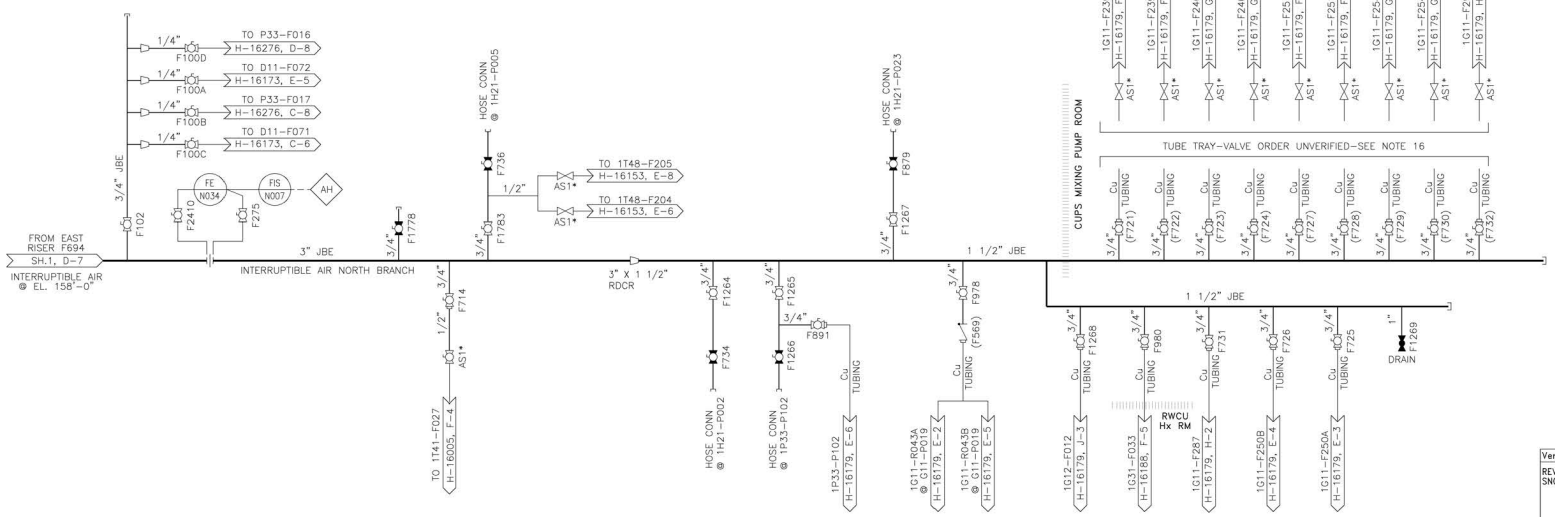

LEGEND:

*-WHERE SHOWN, AIR SUPPLY VALVES "AS#" ARE PREFIXED BY EQUIPMENT MPL NUMBER SERVED. EXAMPLE - 1T41-F002A-AS1.

(FXXX)-PARENTHETICAL MPL NUMBERS DENOTE THAT THOUGH MPL NUMBERS ARE ASSOCIATED WITH THESE VALVES, THEY ARE NOT LABELED IN THE FIELD.

L.O./L.C.-LOCKED OPEN/LOCKED CLOSED

LWO/LWC-LOCK WIRED OPEN/LOCK WIRED CLOSED

H.R.-HANDLE REMOVED

FOR NOTES & REFERENCES SEE H-16239 SHEET 1.

SUPERSEDES H-11667 DATED 9-8-86
AND H-16251 DATED 12-3-71

CRITICAL DOCUMENT

MPL NO. P52-1020 ACAD2010 H1623906

Version: 4.0	Date: 02/23/16
REVISED PER ABN: SNC539300M005, VER 1.0	

BY	CHK'D	APPR.
GTR	DLV	JTL

SOUTHERN COMPANY

"This document contains proprietary, confidential, and/or trade secret information of the subsidiaries of Southern Company or of third parties. It is intended for use only by employees of, or authorized contractors of, the subsidiaries of Southern Company. Unauthorized possession, use, distribution, copying, dissemination, or disclosure of any portion hereof is prohibited."

EDWIN I. HATCH NUCLEAR PLANT UNIT No. 1
REACTOR BUILDING
INSTRUMENT AIR SYSTEM P.&I.D.
SHEET 6

DRAWN	DESIGNED	LOCATION	DRAWING NUMBER	VERSION
Vep	HEW	10-502	H-16239 SHEET 6	4.0
DATE	SCALE: None			

DWG. CATEGORY: CRITICAL

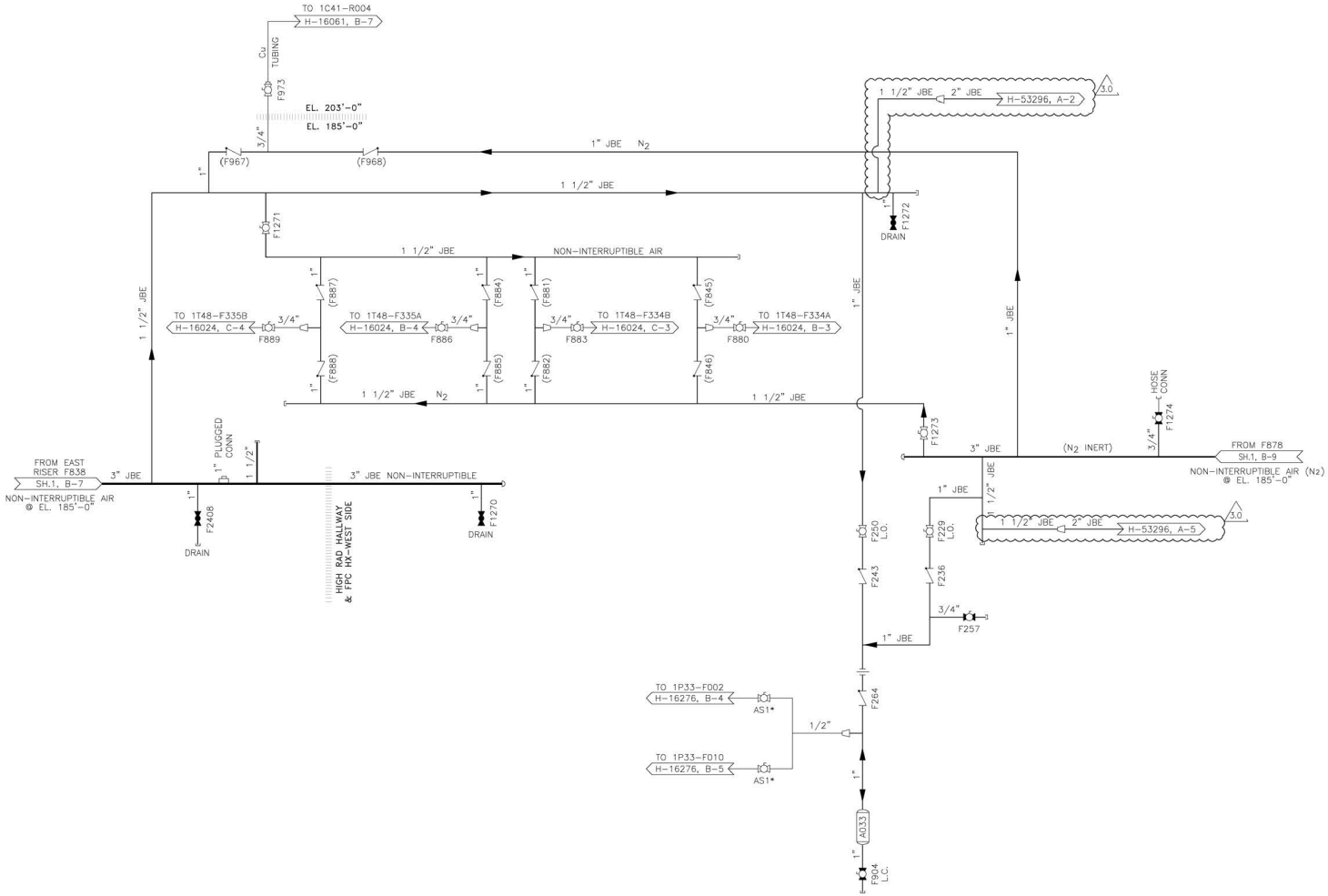

LEGEND:

*-WHERE SHOWN, AIR SUPPLY VALVES "AS#" ARE PREFIXED BY EQUIPMENT MPL NUMBER SERVED. EXAMPLE - 1T41-F002A-AS1.

(FXXX)-PARENTHETICAL MPL NUMBERS DENOTE THAT THOUGH MPL NUMBERS ARE ASSOCIATED WITH THESE VALVES, THEY ARE NOT LABELED IN THE FIELD.

L.O./L.C.-LOCKED OPEN/LOCKED CLOSED

LWO/LWC-LOCK WIRED OPEN/LOCK WIRED CLOSED

H.R.-HANDLE REMOVED

FOR NOTES & REFERENCES SEE H-16239 SHEET 1.

SUPERSEDES H-11667 DATED 9-8-86
AND H-16251 DATED 12-3-71

CRITICAL DOCUMENT

MPL NO. P52-1020 ACAD2010 H1623907

SOUTHERN COMPANY

"This document contains proprietary, confidential, and/or trade secret information of the subsidiaries of Southern Company or of third parties. It is intended for use only by employees of, or authorized contractors of, the subsidiaries of Southern Company. Unauthorized possession, use, distribution, copying, dissemination, or disclosure of any portion hereof is prohibited."

Version: 3.0	Date: 01/15/16
REVISED PER ABN; SNC539900M003, VER 1.0	

BY	CHK'D	APPR.
GTR	DLV	JTL

EDWIN I. HATCH NUCLEAR PLANT UNIT No. 1
REACTOR BUILDING
INSTRUMENT AIR SYSTEM P.&I.D.
SHEET 7 OF 9

DRAWN	DESIGNED	LOCATION	DRAWING NUMBER	VERSION
Vep	HEW	10-502	H-16239 SHEET 7	3.0
DATE	SCALE: None			

DWG. CATEGORY: CRITICAL

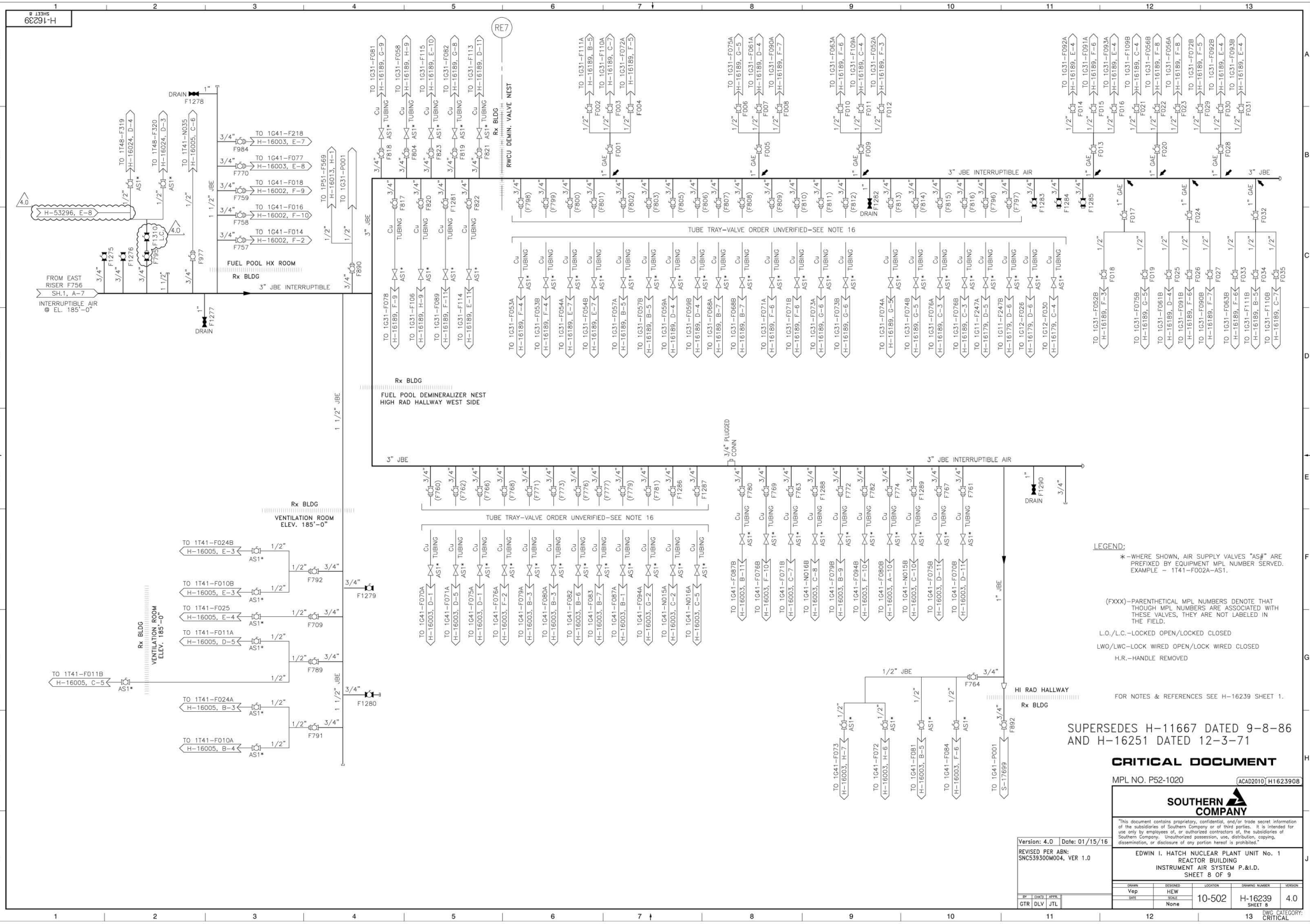
H-16239 SHEET 8
RE7
Rx BLDG
RWCU DEMIN. VALVE NEST
DRAIN F1278
FUEL POOL HX ROOM
Rx BLDG
FROM EAST RISER F756
SH.1, A-7
INTERRUPTIBLE AIR @ EL. 185'-0"
3" JBE INTERRUPTIBLE
DRAIN F1277
3" JBE INTERRUPTIBLE AIR
TUBE TRAY-VALVE ORDER UNVERIFIED-SEE NOTE 16
FUEL POOL DEMINERALIZER NEST
HIGH RAD HALLWAY WEST SIDE
3" PLUGGED CONN
DRAIN F1290
Rx BLDG
VENTILATION ROOM
ELEV. 185'-0"
HI RAD HALLWAY
Rx BLDG
LEGEND:
*-WHERE SHOWN, AIR SUPPLY VALVES "AS#" ARE PREFIXED BY EQUIPMENT MPL NUMBER SERVED. EXAMPLE - 1T41-F002A-AS1.
(FXXX)-PARENTHETICAL MPL NUMBERS DENOTE THAT THOUGH MPL NUMBERS ARE ASSOCIATED WITH THESE VALVES, THEY ARE NOT LABELED IN THE FIELD.
L.O./L.C.-LOCKED OPEN/LOCKED CLOSED
LWO/LWC-LOCK WIRED OPEN/LOCK WIRED CLOSED
H.R.-HANDLE REMOVED
FOR NOTES & REFERENCES SEE H-16239 SHEET 1.
SUPERSEDES H-11667 DATED 9-8-86
AND H-16251 DATED 12-3-71
CRITICAL DOCUMENT
MPL NO. P52-1020
ACAD2010 H1623908
SOUTHERN COMPANY
"This document contains proprietary, confidential, and/or trade secret information of the subsidiaries of Southern Company or of third parties. It is intended for use only by employees of, or authorized contractors of, the subsidiaries of Southern Company. Unauthorized possession, use, distribution, copying, dissemination, or disclosure of any portion hereof is prohibited."
Version: 4.0 Date: 01/15/16
REVISED PER ABN: SNC539300M004, VER 1.0
EDWIN I. HATCH NUCLEAR PLANT UNIT No. 1
REACTOR BUILDING
INSTRUMENT AIR SYSTEM P.&I.D.
SHEET 8 OF 9
DRAWN Vep
DESIGNED HEW
DATE
SCALE None
LOCATION 10-502
DRAWING NUMBER H-16239 SHEET 8
VERSION 4.0
BY GTR CHK'D DLV APPR. JTL
DWG CATEGORY: CRITICAL

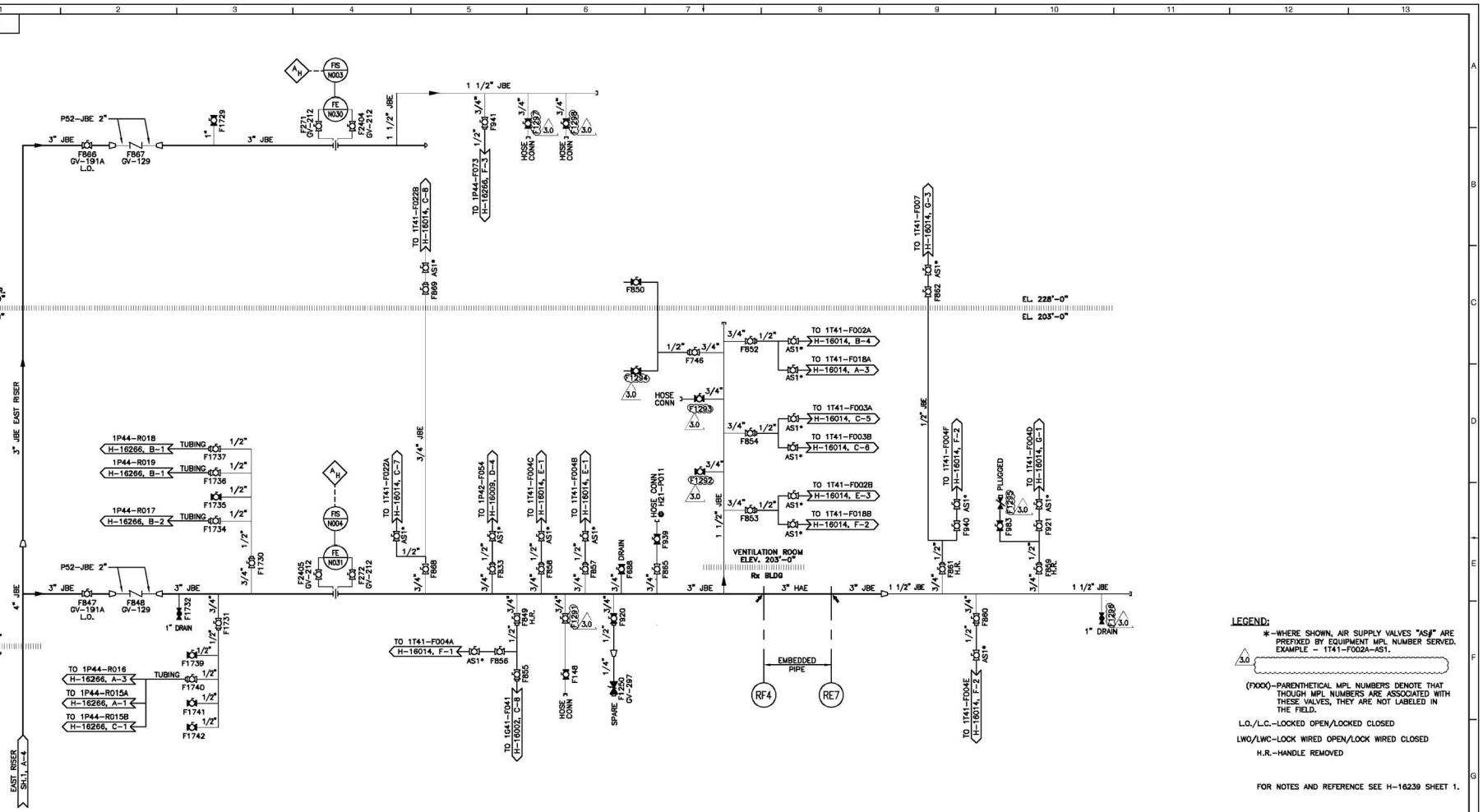

LEGEND:

*-WHERE SHOWN, AIR SUPPLY VALVES "AS#" ARE PREFIXED BY EQUIPMENT MPL NUMBER SERVED. EXAMPLE - 1T41-F002A-AS1.

3.0

(FXXX)-PARENTHETICAL MPL NUMBERS DENOTE THAT THOUGH MPL NUMBERS ARE ASSOCIATED WITH THESE VALVES, THEY ARE NOT LABELED IN THE FIELD.

L.O./L.C.-LOCKED OPEN/LOCKED CLOSED

LWO/LWC-LOCK WIRED OPEN/LOCK WIRED CLOSED

H.R.-HANDLE REMOVED

FOR NOTES AND REFERENCE SEE H-16239 SHEET 1.

SUPERSEDES H-11667 DATED 9-8-86
AND H-16251 DATED 12-3-71

CRITICAL DOCUMENT

MPL NO. P52-1020 ACAD2K H1623909

SOUTHERN COMPANY

This document contains proprietary, confidential, and/or trade secret information of the subsidiaries of Southern Company or of third parties. It is intended for use only by employees of, or authorized contractors of, the subsidiaries of Southern Company. Unauthorized possession, use, distribution, copying, dissemination, or disclosure of any portion hereof is prohibited.

Version: 3.0 Date: 08/14/12

REVISED PER ABN-H02682, VER. 1.0

BY	CHECK	APPR
JWL	RAW	AAN

SEE MICROFILM FOR PREVIOUS REV. SIGNATURES.

EDWIN I. HATCH NUCLEAR PLANT UNIT No. 1
REACTOR BUILDING
INSTRUMENT AIR SYSTEM P&ID
SHEET 9 OF 9

DRAWN	ENGINEER	LOCATION	DRAWING NUMBER	VERSION
KB	HEW	10-502	H-16239 SHEET 9	3.0
DATE	APPR.			
	None			

DRAWING CATEGORY: CRITICAL

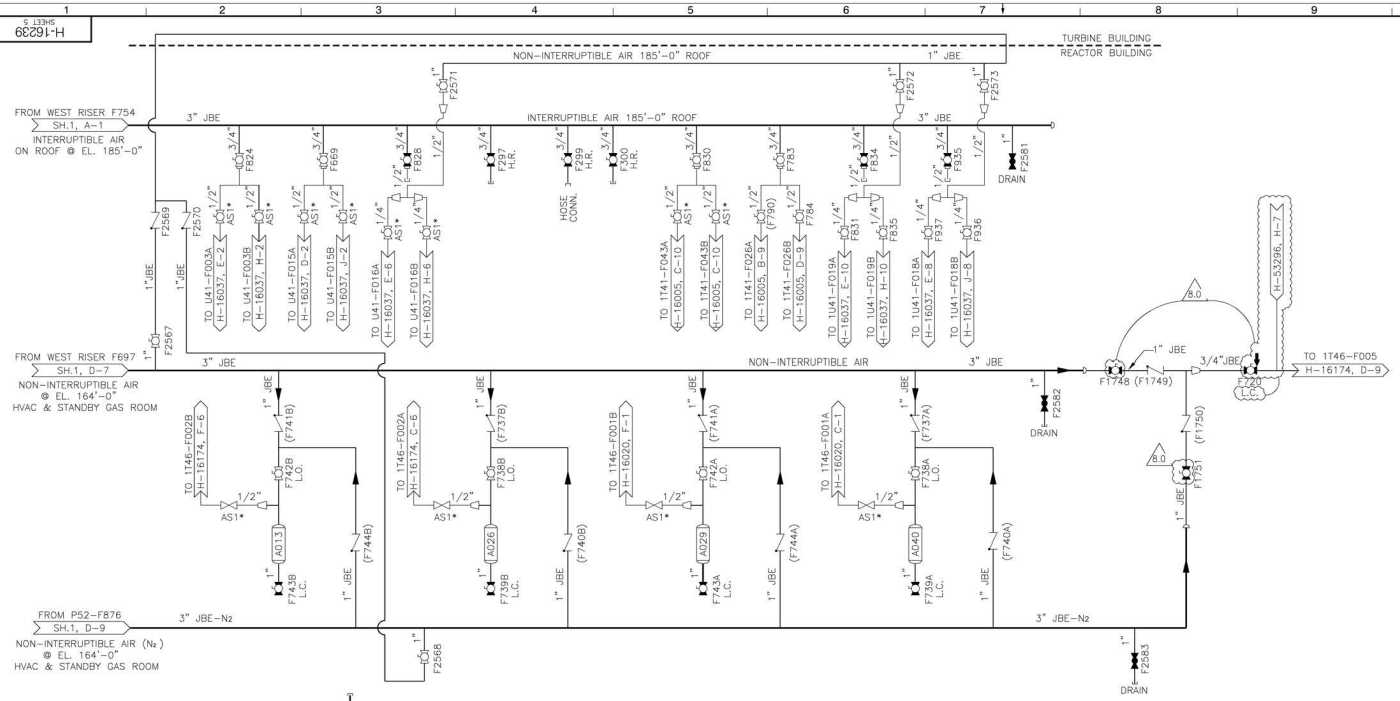

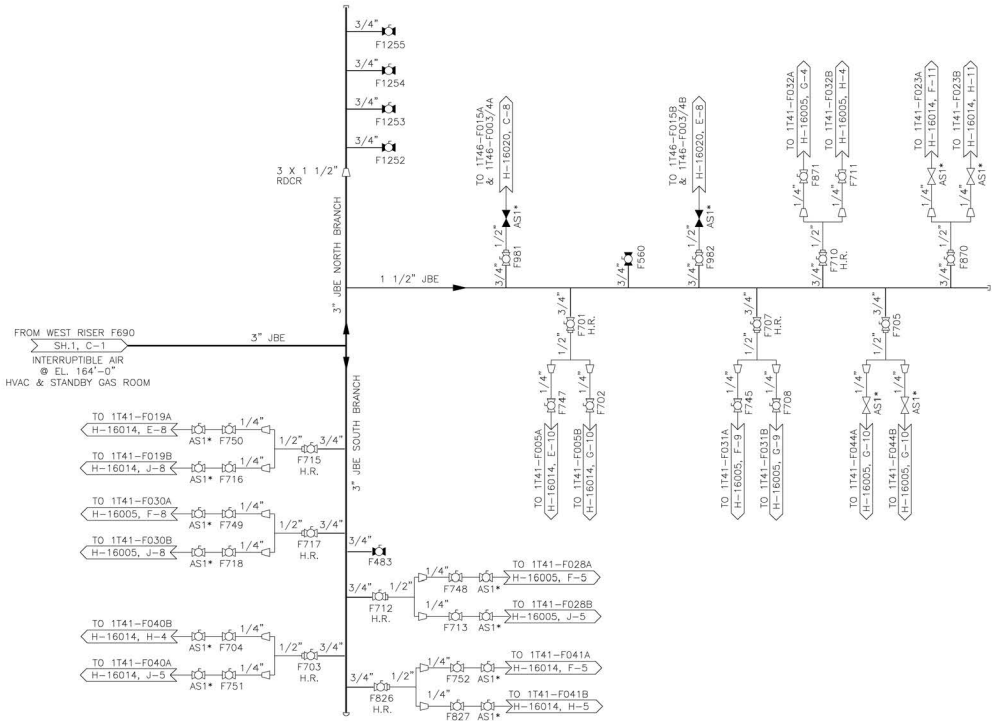

LEGEND:

*-WHERE SHOWN, AIR SUPPLY VALVES "AS#" ARE PREFIXED BY EQUIPMENT MPL NUMBER SERVED. EXAMPLE -- 1T41-F002A-AS1.

(FXXX)-PARENTHETICAL MPL NUMBERS DENOTE THAT THOUGH MPL NUMBERS ARE ASSOCIATED WITH THESE VALVES, THEY ARE NOT LABELED IN THE FIELD.

L.O./L.C.-LOCKED OPEN/LOCKED CLOSED

LWO/LWC-LOCK WIRED OPEN/LOCK WIRED CLOSED

H.R.-HANDLE REMOVED

FOR NOTES & REFERENCES SEE H-16239 SHEET 1.

SUPERSEDES H-11667 DATED 9-8-86
AND H-16251 DATED 12-3-71

CRITICAL DOCUMENT

MPL NO. P52-1020 ACAD2K H1623905

SOUTHERN COMPANY

"This document contains proprietary, confidential, and/or trade secret information of the subsidiaries of Southern Company or of third parties. It is intended for use only by employees of, or authorized contractors of, the subsidiaries of Southern Company. Unauthorized possession, use, distribution, copying, dissemination, or disclosure of any portion hereof is prohibited."

EDWIN I. HATCH NUCLEAR PLANT UNIT No. 1
REACTOR BUILDING
INSTRUMENT AIR SYSTEM P&ID
SHEET 5 OF 9

Version: 8.0	Date: 02/09/16
REVISED PER ABN: SNC539300M006, VER 1.0	

BY	CHK'D	APPR.
GTR	DLV	JTL

DRAWN	DESIGNED	LOCATION	DRAWING NUMBER	VERSION
KB	HEW	10-502	H-16239 SHEET 5	8.0
DATE	SCALE: None			

DRAWING CATEGORY: CRITICAL

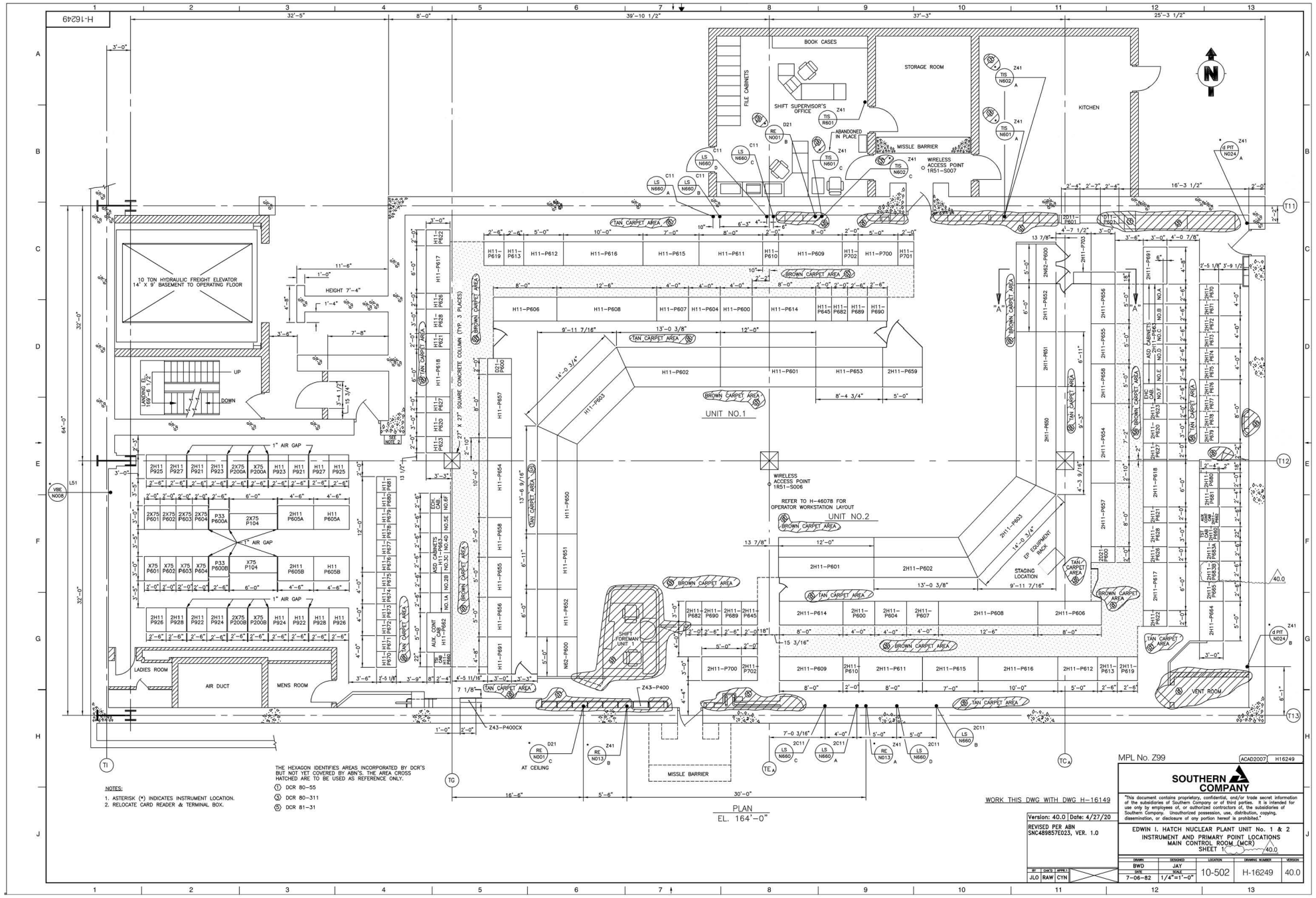
H-16249
BOOK CASES
FILE CABINETS
STORAGE ROOM
SHIFT SUPERVISOR'S OFFICE
KITCHEN
ABANDONED IN PLACE
MISSLE BARRIER
WIRELESS ACCESS POINT 1R51-S007
10 TON HYDRAULIC FREIGHT ELEVATOR 14' X 9' BASEMENT TO OPERATING FLOOR
HEIGHT 7'-4"
LANDING EL. 169'-6 1/2"
UP
DOWN
27" X 27" SQUARE CONCRETE COLUMN (TYP. 3 PLACES)
TAN CARPET AREA
BROWN CARPET AREA
UNIT NO.1
UNIT NO.2
WIRELESS ACCESS POINT 1R51-S006
REFER TO H-46078 FOR OPERATOR WORKSTATION LAYOUT
EP EQUIPMENT RACK
STAGING LOCATION
SHIFT FOREMAN UNIT 1
1" AIR GAP
LADIES ROOM
AIR DUCT
MENS ROOM
VENT ROOM
MISSLE BARRIER
AT CEILING
PLAN
EL. 164'-0"
THE HEXAGON IDENTIFIES AREAS INCORPORATED BY DCR'S BUT NOT YET COVERED BY ABN'S. THE AREA CROSS HATCHED ARE TO BE USED AS REFERENCE ONLY.
1 DCR 80-55
3 DCR 80-311
5 DCR 81-31
NOTES:
1. ASTERISK (*) INDICATES INSTRUMENT LOCATION.
2. RELOCATE CARD READER & TERMINAL BOX.
WORK THIS DWG WITH DWG H-16149
MPL No. Z99
ACAD2007 H16249
SOUTHERN COMPANY
"This document contains proprietary, confidential, and/or trade secret information of the subsidiaries of Southern Company or of third parties. It is intended for use only by employees of, or authorized contractors of, the subsidiaries of Southern Company. Unauthorized possession, use, distribution, copying, dissemination, or disclosure of any portion hereof is prohibited."
Version: 40.0 Date: 4/27/20
REVISED PER ABN SNC489857E023, VER. 1.0
EDWIN I. HATCH NUCLEAR PLANT UNIT No. 1 & 2
INSTRUMENT AND PRIMARY POINT LOCATIONS
MAIN CONTROL ROOM (MCR)
SHEET 1
40.0
BY JLO CHK'D RAW APPR'D CYN
DRAWN BWD DESIGNED JAY LOCATION 10-502 DRAWING NUMBER H-16249 VERSION 40.0
DATE 7-06-82 SCALE 1/4"=1'-0"

H-16251

VALVE	SERVICE OF VALVE SERVED	LOCATION OF VALVE SERVED BY CO-ORD	NON-INT AIR REQ'D	IID. A-16237 Sht. No.	CONN. DETAIL No.	P52-VALVE ASSOCIATED A	B	C	D	E	F	G	AIR REC. No.
DW. PNEU SYS. BACK-UP	DRYWELL PNEU. SYS. BACK-UP												
BACK-UP LINE	UPSTREAM OF FILTERS	RA & R2	YES	9	F964	F965	F966	NA	NA	NA	NA	NA	
DW. PNEU SYS. BACK-UP	DRYWELL PNEU. SYS. BACK-UP												
BACK-UP LINE	UPSTREAM OF AFTERCOOLER	RA & R2	NO	7	F570	NA	NA	NA	NA	NA	NA	NA	
	SPARE		NO	3	F894								
	SPARE		NO	3	F895								
E11-F053A	RHR HX TO RCIC SYS.	RL & R13	NO	036	3	F896	NA	NA	NA	NA	NA	NA	
E11-F053B	RHR HX TO RCIC SYS.	RL & R2	NO	036	3	F897	NA	NA	NA	NA	NA	NA	
E11-F064	R.H.R. TORUS SUCTION	RL & R11	YES	146	2	F589	F590	F591	F592	NA	NA	NA	A021
E11-F065B	R.H.R. TORUS SUCTION	RL & R3	YES	146	2	F593	F594	F595	F596	NA	NA	NA	A022
E11-F065C	R.H.R. TORUS SUCTION	RL & R8	YES	146	2	F597	F598	F599	F600	NA	NA	NA	A023
E11-F065D	R.H.R. TORUS SUCTION	RL & R5	YES	146	2	F601	F602	F603	F604	NA	NA	NA	A024
E21-F019A	CORE SPARY TORUS SUCTION	RH & R11	YES	146	2	F573	F574	F575	F576	NA	NA	NA	A017
E21-F019B	CORE SPARY TORUS SUCTION	RH & R2	YES	146	2	F577	F578	F579	F580	NA	NA	NA	A018
E21-F068A	JOCKEY PUMPS	RL & R2	YES	200	8	F990	F991	F992	NA	NA	NA	NA	
E21-F068B	JOCKEY PUMPS	RL & R2	YES	200	8	F994	F995	F996	NA	NA	NA	NA	
E21-F070A	JOCKEY PUMPS	RL & R2	YES	200	8	F998	F999	F993	NA	NA	NA	NA	
E21-F070B	JOCKEY PUMPS	RL & R2	YES	200	8	F997	F932	F933	NA	NA	NA	NA	
E41-F025	1" FCV-VAC. TK. TO C.R.W.	H.P.C.I.RM.	NO	033	3	F626	NA	NA	NA	NA	NA	NA	
E41-F026	1" FCV-VAC. TK. TO C.R.W.	H.P.C.I.RM.	NO	033	3	F627	NA	NA	NA	NA	NA	NA	
E41-F028	1" FCV-STEAM INLET	H.P.C.I.RM.	NO	033	3	F628	NA	NA	NA	NA	NA	NA	
E41-F029	1" FCV-STEAM INLET	H.P.C.I.RM.	NO	033	3	F629	NA	NA	NA	NA	NA	NA	
E41-F051	H.P.C.I. TORUS SUCTION	RF & R2	YES	146	2	F553	F554	F555	F556	NA	NA	NA	A012
E41-F054	1" FCV-TO MAIN COND.	H.P.C.I.RM.	NO	033	3	F630	NA	NA	NA	NA	NA	NA	
E51-F003	R.C.I.C. TORUS SUCTION	RA & R9	YES	146	2	F549	F550	F551	F552	NA	NA	NA	A011
E51-F004	1" FCV-VAC. TK. TO C.R.W.	S.W.COR.RM.	NO	033	3	F621	NA	NA	NA	NA	NA	NA	
E51-F005	1" FCV-VAC. TK. TO C.R.W.	S.W.COR.RM.	NO	033	3	F622	NA	NA	NA	NA	NA	NA	
E51-F025	1" FCV-STEAM INLET	S.W.COR.RM.	NO	033	3	F623	NA	NA	NA	NA	NA	NA	
E51-F026	1" FCV-STEAM INLET	S.W.COR.RM.	NO	033	3	F624	NA	NA	NA	NA	NA	NA	
E51-F054	1" FCV-TO MAIN COND.	S.W.COR.RM.	NO	033	3	F625	NA	NA	NA	NA	NA	NA	
G11-F003	DRYWELL D.R.W. SUMP DISCH	RE & R4	NO	044	11	F645	NA	NA	NA	NA	NA	NA	
G11-F004	DRYWELL D.R.W. SUMP DISCH	RE & R4	NO	044	11	F645	NA	NA	NA	NA	NA	NA	
G11-F019	DRYWELL C.R.W. SUMP DISCH	RB & R4	NO	044	11	F647	NA	NA	NA	NA	NA	NA	
G11-F020	DRYWELL C.R.W. SUMP DISCH	RB & R4	NO	044	11	F647	NA	NA	NA	NA	NA	NA	
G11-F021	2" GATE-RB CRW SUMP TO W. COLL	N.W. COR.RM.	NO	044	3	F649	NA	NA	NA	NA	NA	NA	
G11-F022	1 1/2" GATE-R.B. C.R.W. SUMP HX	N.W. COR.RM.	NO	044	3	F650	NA	NA	NA	NA	NA	NA	
H21-P001	PANEL IN S. E. CORNER		NO	NOTE 9	24	F675	F1771	NA	NA	NA	NA	NA	
H21-P014	PANEL IN H. P. C. I. CORNER		NO	NOTE 9	3	F679	NA	NA	NA	NA	NA	NA	
H21-P017	AT EL. 87'-0	S.W.COR.RM.	NO		3	F653	NA	NA	NA	NA	NA	NA	
H21-P018	PANEL IN S.E. ROOM		NO		23	F1769	NA	NA	NA	NA	NA	NA	
H21-P018	PANEL IN S.E. ROOM		NO	NOTE 9	24	F675	F1770	NA	NA	NA	NA	NA	
H21-P019	PANEL IN N.E. CORNER		NO	NOTE 9	3	F682	NA	NA	NA	NA	NA	NA	
H21-P021	PANEL IN N.E. CORNER		NO	NOTE 9	3	F683	NA	NA	NA	NA	NA	NA	
P33-F004	H_2/O_2 ANAL. SYS.- DRYWELL	RE & R4	YES	143	21	F231	F237	F908	F244	F251	F258	F265	A035
P33-F006	H_2/O_2 ANAL. SYS.- TORUS	RH & R9	YES	143	21	F231	F238	F912	F245	F252	F259	F266	A034
P33-F007	H_2/O_2 ANAL. SYS.- TORUS	RA & R7	YES	143	21	F232	F239	F916	F246	F253	F260	F267	A036
P33-F012	H_2/O_2 ANAL. SYS.- DRYWELL	RE & R4	YES	143	21	F230	F237	F908	F244	F251	F258	F265	A035
P33-F014	H_2/O_2 ANAL. SYS.- TORUS	RH & R9	YES	143	21	F231	F238	F912	F245	F252	F259	F266	A034
P33-F015	H_2/O_2 ANAL. SYS.- TORUS	RA & R7	YES	143	21	F232	F239	F916	F246	F253	F260	F267	A036
P33-P001A	PANEL	RH & R5	NO	NOTE 9	3	F832	NA	NA	NA	NA	NA	NA	
P33-P001B	PANEL	RH & R5	NO	NOTE 9	3	F674	NA	NA	NA	NA	NA	NA	
P33-P101	PANEL	RA & R13	NO	NOTE 9	3	F963	NA	NA	NA	NA	NA	NA	
P41-F035A	H.P.C.I. RM. COOLERS	RG & RI	NO	033	3	F631	NA	NA	NA	NA	NA	NA	
P41-F035B	H.P.C.I. RM. COOLERS	RG & RI	NO	033	3	F632	NA	NA	NA	NA	NA	NA	
P41-F036A	RHR PUMP ROOM COOLERS	N.E. COR.RM.	NO	033	10	F634*	F667	NA	NA	NA	NA	NA	
P41-F036B	R.H.R. PUMP RM. COOLERS	N.E. COR.RM.	NO	033	3	F634	NA	NA	NA	NA	NA	NA	
P41-F037A	R.H.R. PUMP COOLERS	S.E. COR.RM.	NO	033	3	F635	NA	NA	NA	NA	NA	NA	
P41-F037B	R.H.R. PUMP COOLERS	S.E. COR.RM.	NO	033	3	F636	NA	NA	NA	NA	NA	NA	
P41-F037C	R.H.R. PUMP COOLERS	S.E. COR.RM.	NO	033	3	F637	NA	NA	NA	NA	NA	NA	
P41-F037D	R.H.R. PUMP COOLERS	N.E. COR.RM.	NO	033	3	F638	NA	NA	NA	NA	NA	NA	
P41-F039A	RHR PUMP ROOM COOLERS	S.E. COR.RM.	NO	033	10	F639*	F681	NA	NA	NA	NA	NA	
P41-F039B	R.H.R. PUMP RM. COOLERS	S.E. COR.RM.	NO	033	3	F640	NA	NA	NA	NA	NA	NA	
P41-F040A	R.C.I.C. PUMP RM. COOLERS	S.W. COR.RM.	NO	033	3	F641	NA	NA	NA	NA	NA	NA	
P41-F040B	R.C.I.C. PUMP RM. COOLERS	S.W. COR.RM.	NO	033	3	F642	NA	NA	NA	NA	NA	NA	
P41-F042A	C.R.D. RM. COOLERS	N.W. COR.RM.	NO	033	3	F643	NA	NA	NA	NA	NA	NA	
P41-F042B	C.R.D. RM. COOLERS	S.W. COR.RM.	NO	033	3	F644	NA	NA	NA	NA	NA	NA	
P41-F066	S.W. TO REAC. BLDG.	RL & R6	YES	146	2	F581	F582	F583	F584	NA	NA	NA	A019
P41-F067	S.W. TO REAC. BLDG.	RL & R7	YES	146	2	F585	F586	F587	F588	NA	NA	NA	A020
	SPARE	RF & R6	NO		3	F629	NA	NA	NA	NA	NA	NA	
T41-F033	RHR ROOM EXH. ISOL.	RH & R2	NO		10	F633*	NA	F668	NA	NA	NA	NA	
T41-F034	RHR ROOM EXH. ISOL.	RH & R2	NO		10	F634*	NA	F788	NA	NA	NA	NA	
T41-F036	H. P. C. I. EXH. ISOL.	RH & R2	NO		10	F652*	F666	NA	NA	NA	NA	NA	
T41-F037	H. P. C. I. SUPPLY ISOL.	RH & R2	NO		10	F652*	NA	F651	NA	NA	NA	NA	
T41-F038	RCIC SUPPLY ISOL.	RA & R13	NO		3	F633	NA	NA	NA	NA	NA	NA	
T45-F001	H.P.C.I LEAK DET.	H.P.C.I.RM.	YES	145	2	F529	F530	F531	F532	NA	NA	NA	A006
T45-F002	TORUS AREA LEAK DET.	N.E. COR.RM.	YES	145	1	F533	F534	F535	F536	NA	NA	NA	A002
T45-F003	TORUS AREA LEAK DET.	S.E. COR.RM.	YES	145	1	F533	F534	F535	F536	NA	NA	NA	A007
T45-F004	R.H.R. &C.S. LEAK DET.	S.E. COR.RM.	YES	145	1	F537	F538	F539	F540	NA	NA	NA	A008
T45-F005	R.H.R. &C.S. LEAK DET.	S.E. COR.RM.	YES	145	1	F537	F538	F539	F540	NA	NA	NA	A008
T45-F006	R.C.I.C. LEAK DET.	N.W. COR.RM.	YES	146	2	F541	F542	F543	F544	NA	NA	NA	A009
T45-F007	TORUS AREA LEAK DET.	N.W. COR.RM.	YES	146	2	F545	F546	F547	F548	NA	NA	NA	A010
T48-F082	TORUS EMERGENCY VENT	RE & R4	YES	200	28	F1756	F1757	F1758	F1759	F1760	NA	NA	
T48-F102	N. GLOBE-D. TOT. PURGE	RF & R10	YES	033	3	F611	NA	NA	NA	NA	NA	NA	
T48-F103	6" BFLY-D. TOT. PURGE	RF &R10	NO	044	3	F612	NA	NA	NA	NA	NA	NA	
T48-F104	DRYWELL N2 MAKEUP	RB.2 & R3	NO	33	3	F557							
T48-F307	18" BFL- DRYWELL INLET	RE & R6	NO	044	11	F613	NA	NA	NA	NA	NA	NA	
T48-F308	18" BFLY-DRYWELL INLET	RE & R6	NO	044	11	F613	NA	NA	NA	NA	NA	NA	
T48-F309	18" BFLY-DRYWELL INLET	RE & R11	NO	044	11	F615	NA	NA	NA	NA	NA	NA	
T48-F310	RB TO TORUS VAC. BRKR	RE & R10	YES	146	20	F226	F233	F563	F240	F247	F254	F261	A014
T48-F311	RB TO TORUS VAC. BRKR	RE & R10	YES	146	20	F227	F234	F567	F241	F248	F255	F262	A015
T48-F316	TORUS INBOARD VENT	RE & R2	YES	200	25	F1772	F1752	F1753	F1754	F1755	NA	NA	
T48-F324	18" BFLY-TORUS INLET	RE & R11	NO	044	11	F615	NA	NA	NA	NA	NA	NA	
T48-F326	TORUS OUTBOARD VENT	RE & R3	YES	200	25	F1772	F1752	F1753	F1754	F1755	NA	NA	
T48-F328A	20" VAC. BKR RB TO TORUS	RE & R10	NO	044	11	F618	NA	NA	NA	NA	NA	NA	
T48-F328B	20" VAC. BKR RB TO TORUS	RE & R10	NO	044	11	F619	NA	NA	NA	NA	NA	NA	
T48-F332A	PURGE VALVE	RE & R3	YES	200	8	F765	F775	F778	NA	NA	NA	NA	
T48-F332B	PURGE VALVE	RE & R3	YES	200	8	F766	F767	F779	NA	NA	NA	NA	
T48-F333A	PURGE VALVE	RE & R3	YES	200	8	F839	F840	F841	NA	NA	NA	NA	
T48-F333B	PURGE VALVE	RE & R3	YES	200	8	F842	F843	F844	NA	NA	NA	NA	
	SPARE	RA & R4				F614					NA	NA	
	SPARE	RA & R4				F617					NA	NA	
	SPARE	RA & R4				F616					NA	NA	
C11-F250	CRD PUMP MIN. FLOW BYPASS	RA & R3	NO	037	7A	F1808	NA	NA	NA	NA	NA	NA	
	SPARE	RL & R19				F864					NA	NA	
	SPARE	RA & R7				F618					NA	NA	
B21-F028A	MAIN STM. ISOL VLVS. IN CHASE	RB & R7	YES	147	4	F508	F509	F510	F511	NA	NA	NA	A002
B21-F028B	MAIN STM. ISOL VLVS. IN CHASE	RB & R7	YES	147	4	F512	F513	F514	F515	NA	NA	NA	A003
B21-F028C	MAIN STM. ISOL VLVS. IN CHASE	RB & R7	YES	147	4	F516	F517	F518	F519	NA	NA	NA	A004
B21-F028D	MAIN STM. ISOL VLVS. IN CHASE	RB & R7	YES	147	4	F520	F521	F522	F523	NA	NA	NA	A005
B21-F111	POST ACCIDENT SAMPLE SYS.	RH & R10	YES		14	F068	F067	NA	F069	NA	NA	NA	
B21-F112	POST ACCIDENT SAMPLE SYS.	RH & R10	YES		14	F068	F067	F070	NA	NA	NA	NA	
C11-F002A	C.R.D. INLET PIPE	RA & R4	(NOTE 14)	NA	4								
C11-F002B	C.R.D. INLET PIPE	RA & R4	(NOTE 14)	NA	4								
C11-F010A	SCRAM DISCH. VOL. VENT	RA.7 & R4	(NOTE 14)	NA	4								
C11-F010B	SCRAM DISCH. VOL. VENT	RA.7 & R4	(NOTE 14)	NA	4								
C11-F011	SCRAM DISCH. VOL. DRAIN	RA.7 & R4	(NOTE 14)	NA	4								
C51-J001	DRIVE MECHANISM [4]	RA.7 & R3	NO		22	F571	F1725	NA	NA	NA	NA	NA	
H21-P006	PANEL AT 130'-0	RF & R10	NO	NOTE 9	3	F676	NA	NA	NA	NA	NA	NA	
H21-P009	PANEL AT 130'-0	RF & R10	NO	N/A	27	F677	F1786	NA	NA	NA	NA	NA	
H21-P010	PANEL AT 130'-0	RF & R11	NO	NOTE 9	3	F678	NA	NA	NA	NA	NA	NA	
H21-P015	PANEL AT 130'-0	RF & R10	NO	NOTE 9	3	F680	NA	NA	NA	NA	NA	NA	
H21-P022	PANEL AT 130'-0	RF & R2	NO	N/A	27	F684	F1784	NA	NA	NA	NA	NA	
H21-P025	PANEL AT 130'-0	RE & R5	NO	N/A	27	F685	F1785	NA	NA	NA	NA	NA	
P21-F303A	DEMIN. WATER TO DRUM EXT. DECON.	WE & W4	NO	044	3	F850	NA	NA	NA	NA	NA	NA	
P21-F303B	DEMIN. WATER TO DRUM EXT. DECON.	WE & W4	NO	044	3	F851	NA	NA	NA	NA	NA	NA	
P70-F002	DRYWELL -PNEU. SYS. OULET ISOL.	RE & R5	NO	033	11	F976	NA	NA	NA	NA	NA	NA	
P70-F003	DRYWELL -PNEU. SYS. OULET ISOL.	RE & R5	NO	033	11	F976	NA	NA	NA	NA	NA	NA	
T41-F035	TORUS ROOM EXH. ISOL.	RB & R6	NO		3	F719	NA	NA	NA	NA	NA	NA	
T48-B001	STEAM VAPORIZER	R.B. JIBLOCK	NO		3	F986	NA	NA	NA	NA	NA	NA	
T48-F101	N2 FROM TRAILER	RH & R9		033	3	F924	NA	NA	NA	NA	NA	NA	
T48-F323A	TORUS TO DRYWELL VAC. BKR. TEST	LOCATED ON	NO	144	3	F656	NA	NA	NA	NA	NA	NA	
T48-F323B	TORUS TO DRYWELL VAC. BKR. TEST	CENTER LINE	NO	144	3	F656	NA	NA	NA	NA	NA	NA	
T48-F323C	TORUS TO DRYWELL VAC. BKR. TEST	OF TORUS	NO	144	3	F656	NA	NA	NA	NA	NA	NA	

VALVE	SERVICE OF VALVE SERVED	LOCATION OF VALVE SERVED BY CO-ORD	NON-INT AIR REQ'D	IID. A-16237 Sht. No.	CONN. DETAIL No.	P52-VALVE ASSOCIATED A	B	C	D	E	F	G	AIR REC. No.
T48-F323D	TORUS TO DRYWELL VAC. BKR. TEST		NO	144	3	F656	NA	NA	NA	NA	NA	NA	
T48-F323E	TORUS TO DRYWELL VAC. BKR. TEST		NO	144	3	F656	NA	NA	NA	NA	NA	NA	
T48-F323F	TORUS TO DRYWELL VAC. BKR. TEST		NO	144	3	F656	NA	NA	NA	NA	NA	NA	
T48-F323G	TORUS TO DRYWELL VAC. BKR. TEST	LOCATED ON	NO	144	3	F662	NA	NA	NA	NA	NA	NA	
T48-F323H	TORUS TO DRYWELL VAC. BKR. TEST	CENTER LINE	NO	144	3	F662	NA	NA	NA	NA	NA	NA	
T48-F323J	TORUS TO DRYWELL VAC. BKR. TEST	OF TORUS	NO	144	3	F662	NA	NA	NA	NA	NA	NA	
T48-F323K	TORUS TO DRYWELL VAC. BKR. TEST		NO	144	3	F662	NA	NA	NA	NA	NA	NA	
T48-F323L	TORUS TO DRYWELL VAC. BKR. TEST		NO	144	3	F662	NA	NA	NA	NA	NA	NA	
T48-F323L	TORUS TO DRYWELL VAC. BKR. TEST		NO	144	3	F662	NA	NA	NA	NA	NA	NA	
	SPARE				8	F969	F970	F974	NA				
	SPARE				8	F971	F972	F975	NA				
	SPARE	RH & R10	NO			F071							
	SPARE	RB & R5				F657			NA	NA	NA		
D11-F071	FPM SAMPLE SUPPLY ISO. VLV	RH & R6	NO		15	NA	NA	F100C	NA	NA	NA	NA	
D11-F072	FPM SAMPLE RETURN ISO. VLV	RH & R6	NO		15	F100A	NA	NA	NA	NA	NA	NA	
G11-F239A	4" PLUG-PHASE SEP. DEC	RE & R2	NO	044	3	F721	NA	NA	NA	NA	NA	NA	
G11-F239B	4" PLUG-PHASE SEP. DEC	RE & R2	NO	044	3	F722	NA	NA	NA	NA	NA	NA	
G11-F240A	4" PLUG-RESIN BREAKUP	RE & R2	NO	044	3	F723	NA	NA	NA	NA	NA	NA	
G11-F240B	4" PLUG-RESIN BREAKUP	RE & R2	NO	044	3	F724	NA	NA	NA	NA	NA	NA	
G11-F250A	1 1/2" PLUG-PHASE SEP. DEC	RE 7 & R2	NO	044	3	F725	NA	NA	NA	NA	NA	NA	
G11-F250B	1 1/2" PLUG-PHASE SEP. DEC	RE7 & R2	NO	044	3	F726	NA	NA	NA	NA	NA	NA	
G11-F251A	4" PLUG-RESIN BREAKUP	RE & R2	NO	044	3	F727	NA	NA	NA	NA	NA	NA	
G11-F251B	4" PLUG-RESIN BREAKUP	RE & R2	NO	044	3	F728	NA	NA	NA	NA	NA	NA	
G11-F294A	4" PLUG-SPENT RESIN OUT	RB & R2	NO	044	3	F729	NA	NA	NA	NA	NA	NA	
G11-F294B	4" PLUG-SPENT RESIN OUT	RB & R2	NO	044	3	F730	NA	NA	NA	NA	NA	NA	
G11-F287	1 1/2" PLUG-DEC. OUT	RE 7 & R2	NO	044	3	F731	NA	NA	NA	NA	NA	NA	
G11-F290	3" PLUG-COND. TO PHASE SEP	RE & R2	NO	044	3	F732	NA	NA	NA	NA	NA	NA	
G11-P019	PANEL	RE & R2	NO	NOTE 9	3	F733	NA	NA	NA	NA	NA	NA	
G11-R043A	CLEAN-UP PHASE SEPARATOR FIC	RF & R2	NO	092	13	F978	F569	NA	NA	NA	NA	NA	
G11-R043B	CLEAN-UP PHASE SEPARATOR FIC	RF & R2	NO	092	13	F978	F569	NA	NA	NA	NA	NA	
G31-F001A	SHUTDOWN TO COND. / RW. SYS.	RF & R10	NO	089	3	F980	NA	NA	NA	NA	NA	NA	
H21-P002	PANEL	RH & R2	NO	NOTE 9	3	F734	NA	NA	NA	NA	NA	NA	
H21-P004	PANEL	RH & R4	NO	NOTE 9	3	F735	NA	NA	NA	NA	NA	NA	
H21-P005	PANEL	RH & R4	NO	NOTE 9	3	F736	NA	NA	NA	NA	NA	NA	
H21-P023	PANEL	RF & R3	NO	NOTE 9	3	F879	NA	NA	NA	NA	NA	NA	
N34-R001A	OIL TEMP. MG SET COOLER A	RF & R13	NO		10	F988	NA	F919	NA	NA	NA	NA	
N34-R001B	OIL TEMP. MG SET COOLER B	RH & R13	NO		10	F989	NA	F943	NA	NA	NA	NA	
P33-F003	H_2/O_2 ANAL. SYS.- DRYWELL	RE7 & R9	YES	143	21	F228	F235	F900	F242	F249	F256	F263	A032
P33-F011	H_2/O_2 ANAL. SYS.- DRYWELL	RE7 & R9	YES	143	21	F228	F235	F900	F242	F249	F256	F263	A032
P33-F016	CR "A" DRYWELL/TORUS SELECT VLV	RH & R6	NO		15	NA	NA	NA	F100D	NA	NA	NA	
P33-F017	CR "B" DRYWELL/TORUS SELECT VLV	RH & R6	NO		15	NA	F100B	NA	NA	NA	NA	NA	
P42-F078A	RRCCW-MG. SET COOLER A	RF & R13	NO	133	10	F987	F918	F942	NA	NA	NA	NA	
P42-F078B	RRCCW-MG. SET COOLER B	RH &R13	NO	133	10	F989	F942	NA	NA	NA	NA	NA	
T41-F005A	TO REFUELING FLR. EXH. FAN	RE & R7	NO		10	F701*	F747	NA	NA	NA	NA	NA	
T41-F005B	TO REFUELING FLR. EXH. FAN	RE & R7	NO		10	F701*	NA	F712	NA	NA	NA	NA	
T41-F019A	ADJ. VANES IN REF. FLR. EXH. FAN	RB & R7	NO		10	F715*	F750	NA	NA	NA	NA	NA	
T41-F019B	ADJ. VANES IN REF. FLR. EXH. FAN	RB & R7	NO		10	F715*	NA	F716	NA	NA	NA	NA	
T41-F023A	REF. FLR ISOLATION EXH.	RB & R3	NO		11	F870	NA	NA	NA	NA	NA	NA	
T41-F023B	REF. FLR. ISOLATION EXH.	RB & R3	NO		11	F870	NA	NA	NA	NA	NA	NA	
T41-F027	ACC. AREA EXHAUST	RB & R3	NO		3	F714	NA	NA	NA	NA	NA	NA	
T41-F028A	INACC. AREA EXH. FILTER ISOL.	RB & R7	NO		10	F712*	F748	NA	NA	NA	NA	NA	
T41-F028B	INACC. AREA EXH. FILTER ISOL.	RB & R7	NO		10	F712*	NA	F713	NA	NA	NA	NA	
T41-F029	ADJ. VANES IN R.B. EXH. FAN	RA & R6	NO		10	F717*	F749	NA	NA	NA	NA	NA	
T41-F030B	ADJ. VANES IN R.B. EXH. FAN	RA & R6	NO		10	F717*	NA	F718	NA	NA	NA	NA	
T41-F031A	R.B. INACC. EXH. FAN ISOL.	RA & R5	NO		10	F707*	F745	NA	NA	NA	NA	NA	
T41-F031B	R.B. INACC. EXH. FAN ISOL.	RA & R5	NO		10	F707*	NA	F708	NA	NA	NA	NA	
T41-F032A	R.B. TO SGTS	RB & R5	NO		10	F710*	F871	NA	NA	NA	NA	NA	
T41-F032B	R.B. TO SGTS	RB & R5	NO		10	F710*	NA	F711	NA	NA	NA	NA	
T41-F040A	REFUELING FLOOR TO SGTS	RB & R9	NO		10	F703*	F751	NA	NA	NA	NA	NA	
T41-F040B	REFUELING FLOOR TO SGTS	RB & R9	NO		10	F703*	NA	F704	NA	NA	NA	NA	
T41-F041A	REFUELING FLOOR EXH. VENT ISOL.	RB & R10	NO		10	F826*	F752	NA	NA	NA	NA	NA	
T41-F041B	REFUELING FLOOR EXH. VENT ISOL.	RB & R10	NO		10	F826*	NA	F827	NA	NA	NA	NA	
T41-F043A	R.B. ACC. AREA EXH. VENT ISOL.	RB & R4	NO		11	F830	NA	NA	NA	NA	NA	NA	
T41-F043B	R.B. ACC. AREA EXH. VENT ISOL.	RB & R4	NO		11	F830	NA	NA	NA	NA	NA	NA	
T41-F044A	R.B. INACC. AREA EXH. VENT ISOL.	RB & R4	NO		11	F705	NA	NA	NA	NA	NA	NA	
T41-F044B	R.B. INACC. AREA EXH. VENT ISOL.	RB & R4	NO		11	F705	NA	NA	NA	NA	NA	NA	
T46-F001A	SGTS SYSTEM	RB & R2	YES	144	2	F727A	F738A	F739A	F740A	NA	NA	NA	
T46-F001B	SGTS SYSTEM	RB & R3	YES	144	2	F741A	F742A	F743A	F744A	NA	NA	NA	A029
T46-F002A	SGTS SYSTEM	RB & R2	YES	144	2	F737B	F738B	F739B	F740B	NA	NA	NA	A026
T46-F002B	SGTS SYSTEM	RB & R3	YES	144	2	F741B	F742B	F743B	F744B	NA	NA	NA	A013
T46-F003A	SGTS FILTER DISCHARGE	RA & R2	NO	163	11	F981	NA	NA	NA	NA	NA	NA	
T46-F003B	SGTS FILTER DISCHARGE	RA & R2	NO	163	11	F982	NA	NA	NA	NA	NA	NA	
T46-F004A	SGTS FILTER DISCHARGE	RA & R2	NO	163	11	F981	NA	NA	NA	NA	NA	NA	
T46-F004B	SGTS FILTER DISCHARGE	RA & R2	NO	163	11	F982	NA	NA	NA	NA	NA	NA	
T48-F080	SBGT OUTLET ISOL.	RE & R5	YES	200	25	F1743	F1744	F1745	F1746	F1747	NA	NA	
T48-F081	SBGT INLET ISOL.	RE & R5	YES	200	25	F1743	F1744	F1745	F1746	F1747	NA	NA	
	SPARE	RA & R3				F658							
	SPARE	RA & R3				F659							
	SPARE	RA & R3				F660							
	SPARE	RA & R3				F661							
	SPARE	RA & R3				F1814							
	SPARE	RA & R7				F663			NA	NA	NA		
	SPARE	RF & R11	NO			F664			NA	NA	NA		
B31-F020	RECIRC. LOOP "B" SAMPLE	RF 4 & R6	NO	033	3	F987	NA	NA	NA	NA	NA	NA	
G31-F247A	4" GATE-F/D TO PHASE SEP	RE 7 & R3	NO	044	3	F796	NA	NA	NA	NA	NA	NA	
G31-F247B	4" GATE-F/D TO PHASE SEP	RE 7 & R3	NO	044	3	F797	NA	NA	NA	NA	NA	NA	
G31-F052A	3" BALL VALVE	RE 7 & R3	NO	NOTE 12	16	F016	F017	F018	NA	NA	NA	NA	
G31-F052B	3" BALL VALVE	RE 7 & R3	NO	NOTE 12	17	F017	F018	NA	NA	NA	NA	NA	
G31-F053A	3" PLUG-FR NRHX. TO F/D	RE 7 & R3	NO	187	3	F798	NA	NA	NA	NA	NA	NA	
G31-F053B	3" PLUG-FR NRHX. TO F/D	RE 7 & R3	NO	187	3	F799	NA	NA	NA	NA	NA	NA	
G31-F054A	3" GLOBE DISCH. FR. F/D EFFLUENT	RE 7 & R3	NO	098	3	F800	NA	NA	NA	NA	NA	NA	
G31-F054B	3" GLOBE DISCH. FR. F/D EFFLUENT	RE 7 & R3	NO	098	3	F801	NA	NA	NA	NA	NA	NA	
G31-F055A	3" BALL VALVE	RE 7 & R3	NO	NOTE 12	16	F019	F023	NA	NA	NA	NA	NA	
G31-F055B	3" BALL VALVE	RE 7 & R3	NO	NOTE 12	16	F020	F022	NA	NA	NA	NA	NA	
G31-F057A	2" PLUG-F/D TO C.R.W.	RE 7 & R3	NO	044	3	F804	NA	NA	NA	NA	NA	NA	
G31-F057B	2" PLUG-F/D TO C.R.W.	RE 7 & R3	NO	044	3	F805	NA	NA	NA	NA	NA	NA	
G31-F058	3" BFLY-COND TO PRECOAT	RF & R2	NO	044	3	F804	NA	NA	NA	NA	NA	NA	
G31-F059A	3" PLUG-TO PHASE SEP. FR. F/D	RE 7 & R3	NO	044	3	F805	NA	NA	NA	NA	NA	NA	
G31-F059B	3" PLUG-TO PHASE SEP. FR. F/D	RE 7 & R3	NO	044	3	F808	NA	NA	NA	NA	NA	NA	
G31-F061A	3" BALL VALVE	RE 7 & R3	NO	NOTE 12	16	F005	F007	NA	NA	NA	NA	NA	
G31-F061B	3" BALL VALVE	RE 7 & R3	NO	NOTE 12	16	F024	F025	NA	NA	NA	NA	NA	
G31-F063A	3" BALL VALVE	RE 7 & R3	NO	NOTE 12	16	F009	F010

H-16274

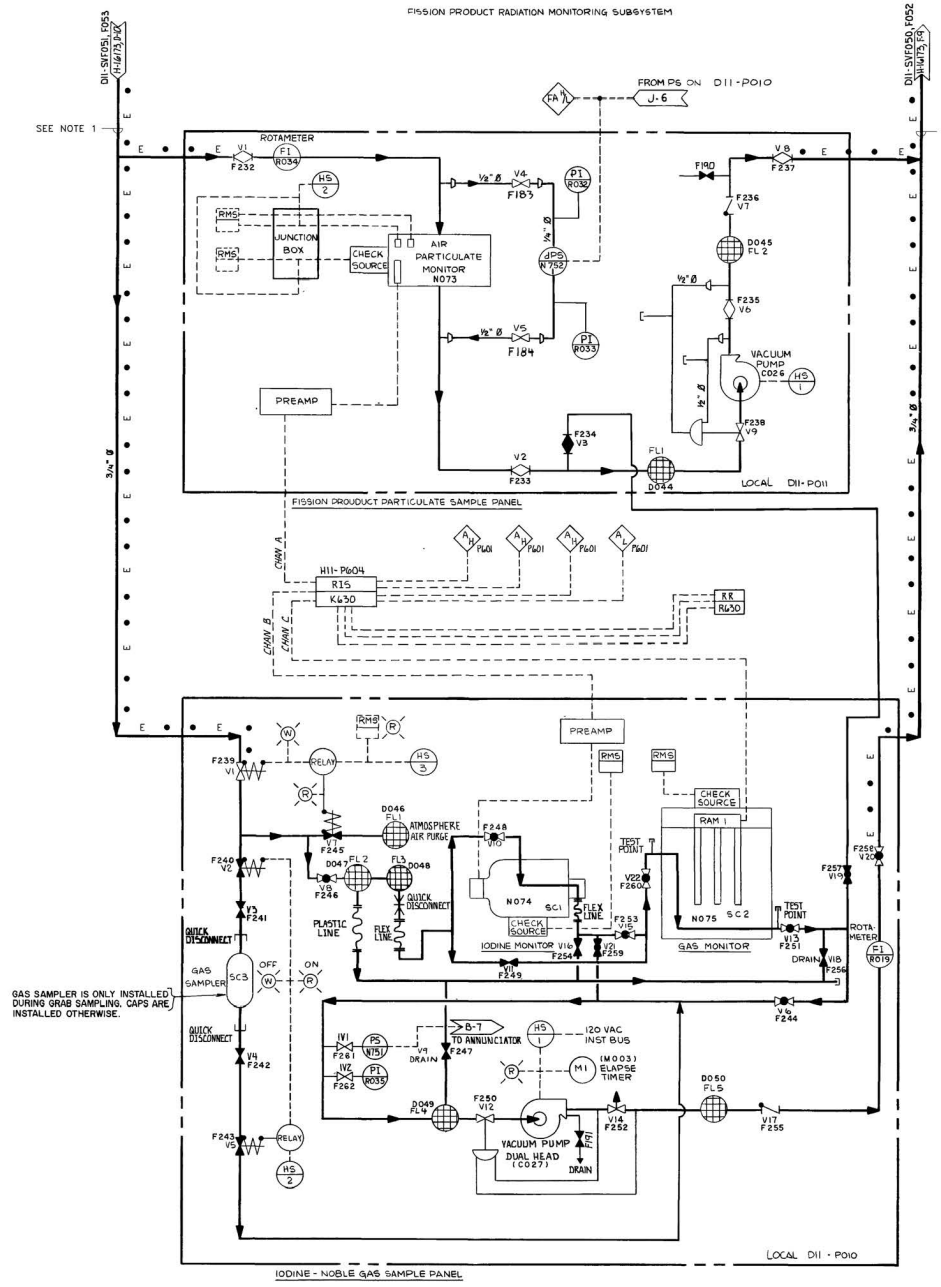

NOTES:
1. THIS LINE HEAT TRACED AND INSULATED WITH 1" OF FIBERGLASS INSULATION TO MAINTAIN A TEMP. OF 110° F.

FOR NOTES AND REFERENCES SEE H-16173, FISSION PRODUCTS MONITORING SYSTEM P+ID SHT NO. 1

CRITICAL DOCUMENT

MPL NO. D11-1010 OVY2000 H16274

SOUTHERN COMPANY

"This document contains proprietary, confidential, and/or trade secret information of the subsidiaries of Southern Company or of third parties. It is intended for use only by employees of, or authorized contractors of, the subsidiaries of Southern Company. Unauthorized possession, use, distribution, copying, dissemination, or disclosure of any portion hereof is prohibited."

EDWIN I. HATCH NUCLEAR PLANT UNIT No. 1
FISSION PRODUCTS MONITORING
SYSTEM P&ID SH. 2

DRAWN	DESIGNED	LOCATION	DRAWING NUMBER	VERSION
LKM	LKM	10-502	H-16274	11.0
DATE	SCALE			
2-1-78	None			

BY	CHK'D	APPR.
GTR	DAB	JTL

Version: 11.0 | Date: 11/6/14
REVISED PER: ABN-H03790, VER. 1.0

11.0 DRAWING CATEGORY: CRITICAL

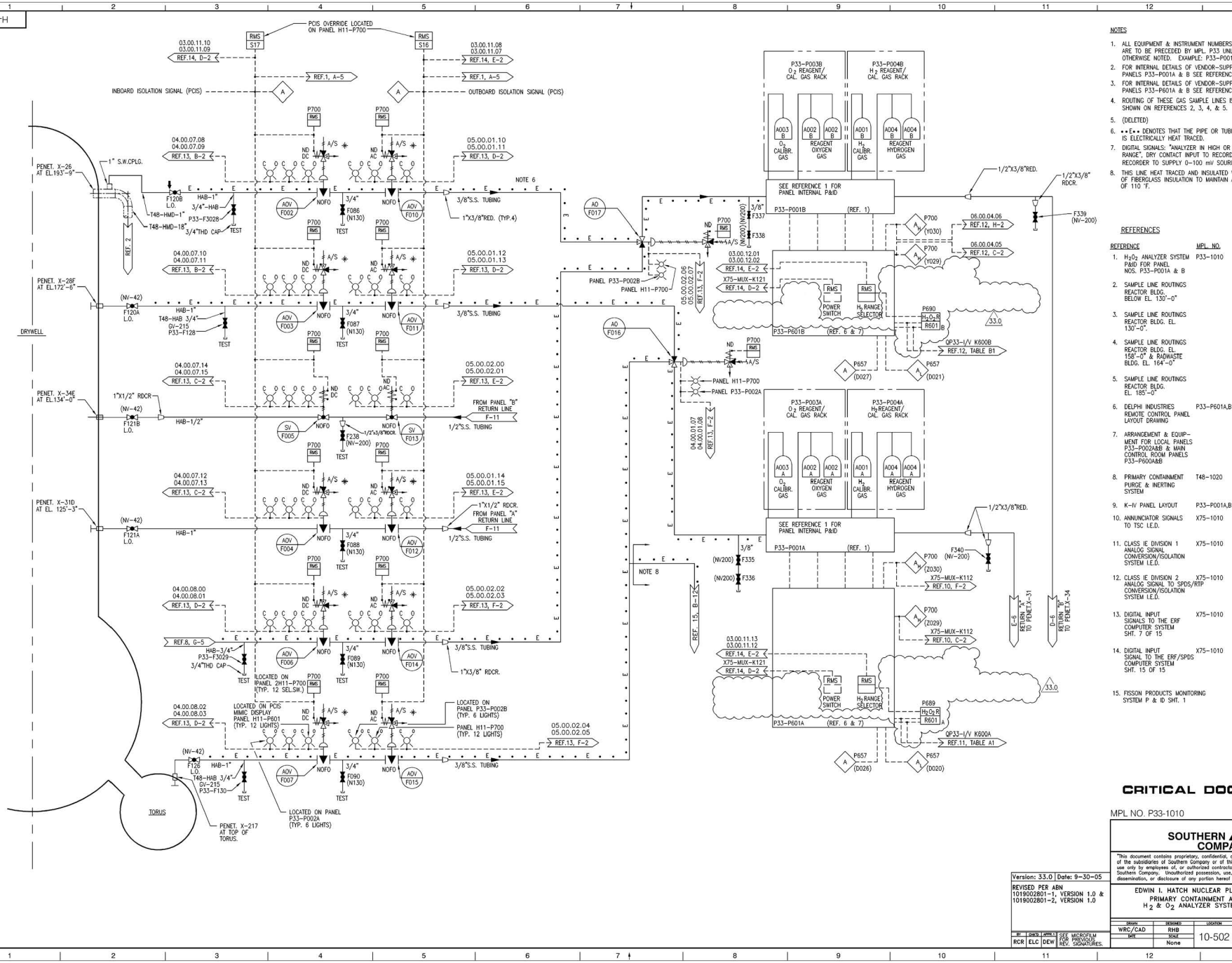

NOTES

1. ALL EQUIPMENT & INSTRUMENT NUMBERS ARE TO BE PRECEDED BY MPL. P33 UNLESS OTHERWISE NOTED. EXAMPLE: P33-P001A.
2. FOR INTERNAL DETAILS OF VENDOR-SUPPLIED PANELS P33-P001A & B SEE REFERENCE 1.
3. FOR INTERNAL DETAILS OF VENDOR-SUPPLIED PANELS P33-P601A & B SEE REFERENCE 6.
4. ROUTING OF THESE GAS SAMPLE LINES IS AS SHOWN ON REFERENCES 2, 3, 4, & 5.
5. (DELETED)
6. ••E•• DENOTES THAT THE PIPE OR TUBING IS ELECTRICALLY HEAT TRACED.
7. DIGITAL SIGNALS: "ANALYZER IN HIGH OR LOW RANGE", DRY CONTACT INPUT TO RECORDER. RECORDER TO SUPPLY 0-100 mV SOURCE.
8. THIS LINE HEAT TRACED AND INSULATED WITH 1" OF FIBERGLASS INSULATION TO MAINTAIN A TEMP. OF 110 °F.

REFERENCES

REFERENCE	MPL NO.	S.S. NO.
1. H_2O_2 ANALYZER SYSTEM P&ID FOR PANEL NOS. P33-P001A & B	P33-1010	H-16280
2. SAMPLE LINE ROUTINGS REACTOR BLDG. BELOW EL. 130'-0"		H-16553
3. SAMPLE LINE ROUTINGS REACTOR BLDG. EL. 130'-0".		H-16554
4. SAMPLE LINE ROUTINGS REACTOR BLDG. EL. 158'-0" & RADWASTE BLDG. EL. 164'-0"		H-16556
5. SAMPLE LINE ROUTINGS REACTOR BLDG. EL. 185'-0"		H-16557
6. DELPHI INDUSTRIES REMOTE CONTROL PANEL LAYOUT DRAWING	P33-P601A,B	SX-19180
7. ARRANGEMENT & EQUIP-MENT FOR LOCAL PANELS P33-P002A&B & MAIN CONTROL ROOM PANELS P33-P600A&B		H-16166
8. PRIMARY CONTAINMENT PURGE & INERTING SYSTEM	T48-1020	H-16024
9. K-IV PANEL LAYOUT	P33-P001A,B	SX-19181
10. ANNUNCIATOR SIGNALS TO TSC I.E.D.	X75-1010	H-16402
11. CLASS 1E DIVISION 1 ANALOG SIGNAL CONVERSION/ISOLATION SYSTEM I.E.D.	X75-1010	H-16395
12. CLASS 1E DIVISION 2 ANALOG SIGNAL TO SPDS/RTP CONVERSION/ISOLATION SYSTEM I.E.D.	X75-1010	H-16402
13. DIGITAL INPUT SIGNALS TO THE ERF COMPUTER SYSTEM SHT. 7 OF 15	X75-1010	H-16409
14. DIGITAL INPUT SIGNAL TO THE ERF/SPDS COMPUTER SYSTEM SHT. 15 OF 15	X75-1010	H-16417
15. FISSON PRODUCTS MONITORING SYSTEM P & ID SHT. 1		H-16173

CRITICAL DOCUMENT

MPL NO. P33-1010 ACAD2K H16276

SOUTHERN COMPANY

"This document contains proprietary, confidential, and/or trade secret information of the subsidiaries of Southern Company or of third parties. It is intended for use only by employees of, or authorized contractors of, the subsidiaries of Southern Company. Unauthorized possession, use, distribution, copying, dissemination, or disclosure of any portion hereof is prohibited."

EDWIN I. HATCH NUCLEAR PLANT UNIT No. 1
PRIMARY CONTAINMENT ATMOSPHERE
H_2 & O_2 ANALYZER SYSTEM P&ID SH.1

Version: 33.0	Date: 9-30-05
REVISED PER ABN 1019002801-1, VERSION 1.0 & 1019002801-2, VERSION 1.0	

BY	CHK'D	APPR'D
RCR	ELC	DEW

SEE MICROFILM FOR PREVIOUS REV. SIGNATURES.

DRAWN	DESIGNED	LOCATION	DRAWING NUMBER	VERSION
WRC/CAD	RHB	10-502	H-16276	33.0
DATE	SCALE None			

DWG CATEGORY: CRITICAL

H-16280

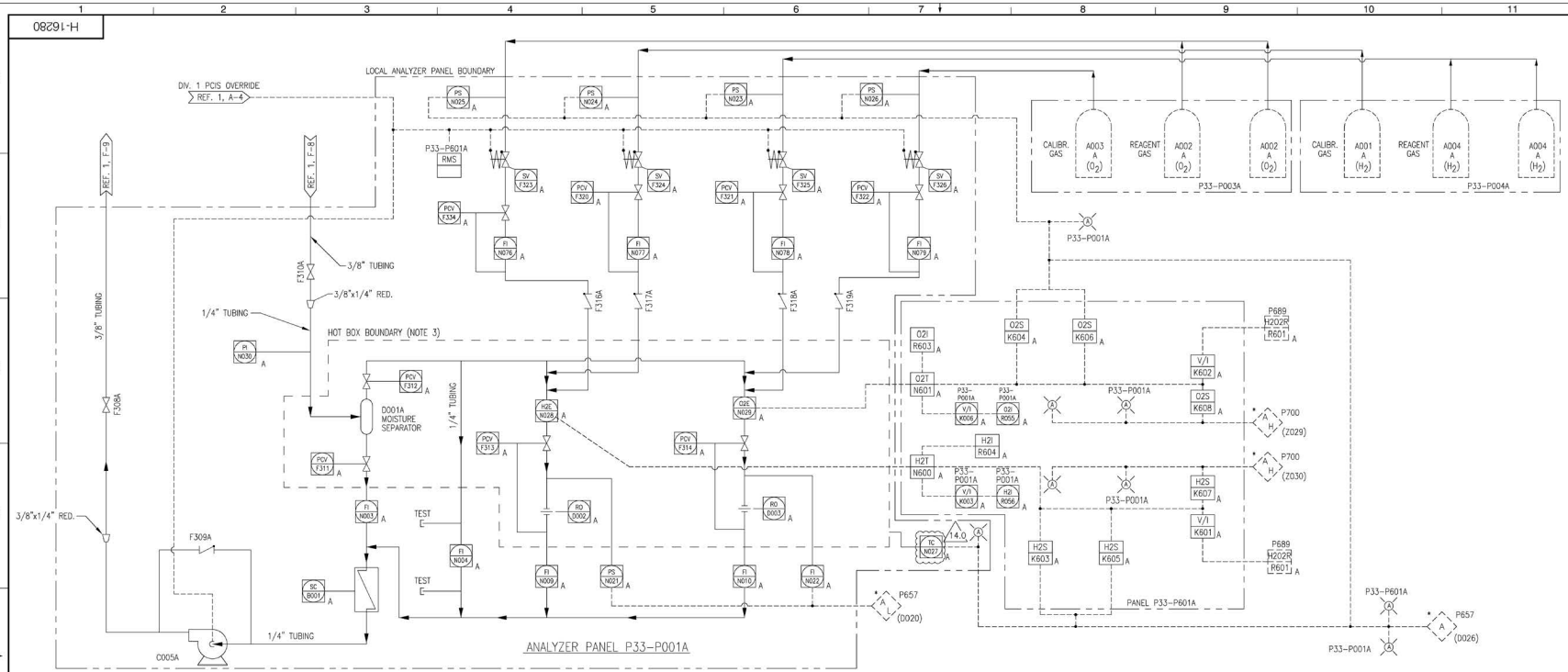

NOTES:

1. ALL EQUIPMENT AND INSTRUMENT NUMBERS ARE TO BE PRECEDED BY MPL P33 UNLESS OTHERWISE NOTED. EXAMPLE: PS N024A.
2. FOR LOCATION AND IDENTIFICATION OF INSTRUMENTS – SEE INSTRUMENT INDEX.
3. — — — DENOTES THE BOUNDARIES OF A HOT BOX THAT CONTAINS H_2 & O_2 ANALYZER ELEMENTS. THE HOT BOX IS MAINTAINED AT 275°F.
4. ALL EQUIPMENT SHOWN ON THIS P&I.D. WAS SUPPLIED BY THE MANUFACTURER OF THE ANALYZER PANEL EXCEPT THAT EQUIPMENT DESIGNATED BY *.
5. PANELS P33-P001A AND B ARE IDENTICAL IN DESIGN AND CONSTRUCTION TO PROVIDE REDUNDANT SAMPLING CHANNELS.
6. THIS DRAWING SUPERSEDES SX-15928.
7. DELPHI CONTROL SYSTEM TEMPERATURE CONTROL BOARD AND KIT P/N 11901 AND P/N 11901-MK ARE AN APPROVED REPLACEMENT FOR FENWAL TEMPERATURE SWITCH P/N 228000 FOR LOCATION (1P33N027A,B) UNDER ED SNC846808. 14.0

REFERENCES:

REFERENCE	MPL NO.	SS NO.
1. PRIMARY CONTAINMENT ATMOSPHERE H_2 & O_2 ANALYZER SYSTEM P&I.D. SHEET NO, 1	P33-1010	H-16276
2. K-IV PANEL LAYOUT	P33-P001 A&B	SX-19181
3. PIPING AND INSTRUMENT SYMBOLS	A41-1010	S-15051
4. CONTROL BOARD ARRANGEMENT OF PANEL H11-P700	H11-P700	H-16318

CRITICAL DOCUMENT

MPL. NO. P33-1010 ACAD2K H16280

SOUTHERN COMPANY

"This document contains proprietary, confidential, and/or trade secret information of the subsidiaries of Southern Company or of third parties. It is intended for use only by employees of, or authorized contractors of, the subsidiaries of Southern Company. Unauthorized possession, use, distribution, copying, dissemination, or disclosure of any portion hereof is prohibited."

EDWIN I. HATCH NUCLEAR PLANT UNIT No.1
PRIMARY CONTAINMENT ATMOSPHERE
H_2 & O_2 ANALYZER SYSTEM P&ID
FOR PANEL NOS. P33-P001A, B SHT. NO. 2

Version: 14.0 Date: 4/27/20
REVISED PER ABN SNC846808W020 V1.0

BY	CHK'D	APPR'D
JMM	JDC	JMC

SEE MICROFILM FOR PREVIOUS REV. SIGNATURES.

DRAWN	DESIGNED	LOCATION	DRAWING NUMBER	VERSION
CAD/WC		10-502	H-16280	14.0
DATE 4/7/83	SCALE None			

DWG. CATEGORY: CRITICAL

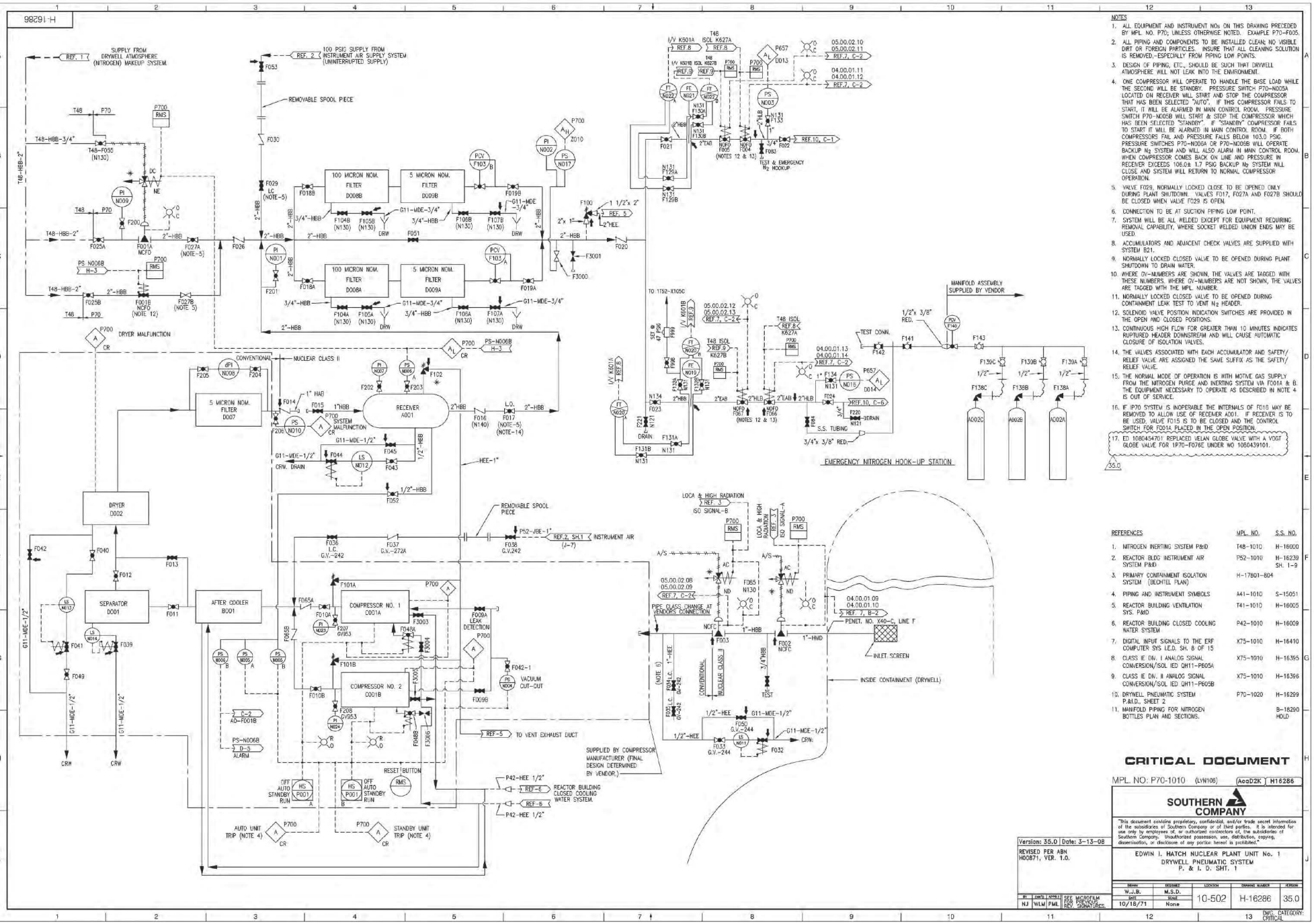

NOTES

1. ALL EQUIPMENT AND INSTRUMENT NOs ON THIS DRAWING PRECEDED BY MPL NO. P70; UNLESS OTHERWISE NOTED. EXAMPLE P70-F005.
2. ALL PIPING AND COMPONENTS TO BE INSTALLED CLEAN; NO VISIBLE DIRT OR FOREIGN PARTICLES. INSURE THAT ALL CLEANING SOLUTION IS REMOVED,-ESPECIALLY FROM PIPING LOW POINTS.
3. DESIGN OF PIPING, ETC., SHOULD BE SUCH THAT DRYWELL ATMOSPHERE WILL NOT LEAK INTO THE ENVIRONMENT.
4. ONE COMPRESSOR WILL OPERATE TO HANDLE THE BASE LOAD WHILE THE SECOND WILL BE STANDBY. PRESSURE SWITCH P70-N005A LOCATED ON RECEIVER WILL START AND STOP THE COMPRESSOR THAT HAS BEEN SELECTED "AUTO". IF THIS COMPRESSOR FAILS TO START, IT WILL BE ALARMED IN MAIN CONTROL ROOM. PRESSURE SWITCH P70-N005B WILL START & STOP THE COMPRESSOR WHICH HAS BEEN SELECTED "STANDBY". IF "STANDBY" COMPRESSOR FAILS TO START IT WILL BE ALARMED IN MAIN CONTROL ROOM. IF BOTH COMPRESSORS FAIL AND PRESSURE FALLS BELOW 103.0 PSIG PRESSURE SWITCHES P70-N006A OR P70-N006B WILL OPERATE BACKUP N_2 SYSTEM AND WILL ALSO ALARM IN MAIN CONTROL ROOM. WHEN COMPRESSOR COMES BACK ON LINE AND PRESSURE IN RECEIVER EXCEEDS 106.0± 1.7 PSIG BACKUP N_2 SYSTEM WILL CLOSE AND SYSTEM WILL RETURN TO NORMAL COMPRESSOR OPERATION.
5. VALVE F029, NORMALLY LOCKED CLOSE TO BE OPENED ONLY DURING PLANT SHUTDOWN. VALVES F017, F027A AND F027B SHOULD BE CLOSED WHEN VALVE F029 IS OPEN.
6. CONNECTION TO BE AT SUCTION PIPING LOW POINT.
7. SYSTEM WILL BE ALL WELDED EXCEPT FOR EQUIPMENT REQUIRING REMOVAL CAPABILITY, WHERE SOCKET WELDED UNION ENDS MAY BE USED
8. ACCUMULATORS AND ADJACENT CHECK VALVES ARE SUPPLIED WITH SYSTEM B21.
9. NORMALLY LOCKED CLOSED VALVE TO BE OPENED DURING PLANT SHUTDOWN TO DRAIN WATER.
10. WHERE DV-NUMBERS ARE SHOWN, THE VALVES ARE TAGGED WITH THESE NUMBERS. WHERE DV-NUMBERS ARE NOT SHOWN, THE VALVES ARE TAGGED WITH THE MPL NUMBER.
11. NORMALLY LOCKED CLOSED VALVE TO BE OPENED DURING CONTAINMENT LEAK TEST TO VENT N_2 HEADER.
12. SOLENOID VALVE POSITION INDICATION SWITCHES ARE PROVIDED IN THE OPEN AND CLOSED POSITIONS.
13. CONTINUOUS HIGH FLOW FOR GREATER THAN 10 MINUTES INDICATES RUPTURED HEADER DOWNSTREAM AND WILL CAUSE AUTOMATIC CLOSURE OF ISOLATION VALVES.
14. THE VALVES ASSOCIATED WITH EACH ACCUMULATOR AND SAFETY/RELIEF VALVE ARE ASSIGNED THE SAME SUFFIX AS THE SAFETY/RELIEF VALVE.
15. THE NORMAL MODE OF OPERATION IS WITH MOTIVE GAS SUPPLY FROM THE NITROGEN PURGE AND INERTING SYSTEM VIA F0014 & B. THE EQUIPMENT NECESSARY TO OPERATE AS DESCRIBED IN NOTE 4 IS OUT OF SERVICE.
16. IF IP70 SYSTEM IS INOPERABLE THE INTERNALS OF F016 MAY BE REMOVED TO ALLOW USE OF RECEIVER A001. IF RECEIVER IS TO BE USED, VALVE F015 IS TO BE CLOSED AND THE CONTROL SWITCH FOR F0014 PLACED IN THE OPEN POSITION.
17. ED 1080454701 REPLACED VELAN GLOBE VALVE WITH A VOGT GLOBE VALVE FOR 1P70-F076E UNDER WO 1080439101.

35.0

REFERENCES

		MPL. NO.	S.S. NO.
1.	NITROGEN INERTING SYSTEM P&ID	T48-1010	H-16000
2.	REACTOR BLDG INSTRUMENT AIR SYSTEM P&ID	P52-1010	H-16239 SH. 1-9
3.	PRIMARY CONTAINMENT ISOLATION SYSTEM (BECHTEL PLAN)	H-17801-804	
4.	PIPING AND INSTRUMENT SYMBOLS	A41-1010	S-15051
5.	REACTOR BUILDING VENTILATION SYS. P&ID	T41-1010	H-16005
6.	REACTOR BUILDING CLOSED COOLING WATER SYSTEM	P42-1010	H-16009
7.	DIGITAL INPUT SIGNALS TO THE ERF COMPUTER SYS I.E.D. SH. 8 OF 15	X75-1010	H-16410
8.	CLASS IE DIV. I ANALOG SIGNAL CONVERSION/ISOL IED GH11-P605A	X75-1010	H-16395
9.	CLASS IE DIV. II ANALOG SIGNAL CONVERSION/ISOL IED GH11-P605B	X75-1010	H-16396
10.	DRYWELL PNEUMATIC SYSTEM P.&I.D., SHEET 2	P70-1020	H-16299
11.	MANIFOLD PIPING FOR NITROGEN BOTTLES PLAN AND SECTIONS.		B-18290 HOLD

CRITICAL DOCUMENT

MPL. NO: P70-1010 (LVN108) AccD2K H16286

SOUTHERN COMPANY

"This document contains proprietary, confidential, and/or trade secret information of the subsidiaries of Southern Company or of third parties. It is intended for use only by employees of, or authorized contractors of, the subsidiaries of Southern Company. Unauthorized possession, use, distribution, copying, dissemination, or disclosure of any portion hereof is prohibited."

EDWIN I. HATCH NUCLEAR PLANT UNIT No. 1
DRYWELL PNEUMATIC SYSTEM
P. & I. D. SHT. 1

DRAWN	DESIGNED	LOCATION	DRAWING NUMBER	VERSION
W.J.B.	M.S.D.			
DATE	SCALE	10-502	H-16286	35.0
10/18/71	None			

DWG. CATEGORY: CRITICAL

BY	CHK'D	APP'D
NJ	WLM	PML

SEE MICROFILM FOR ORIGINAL REV. SIGNATURES.

Version: 35.0 | Date: 3-13-08

REVISED PER ABN H00871, VER. 1.0.

H-16299

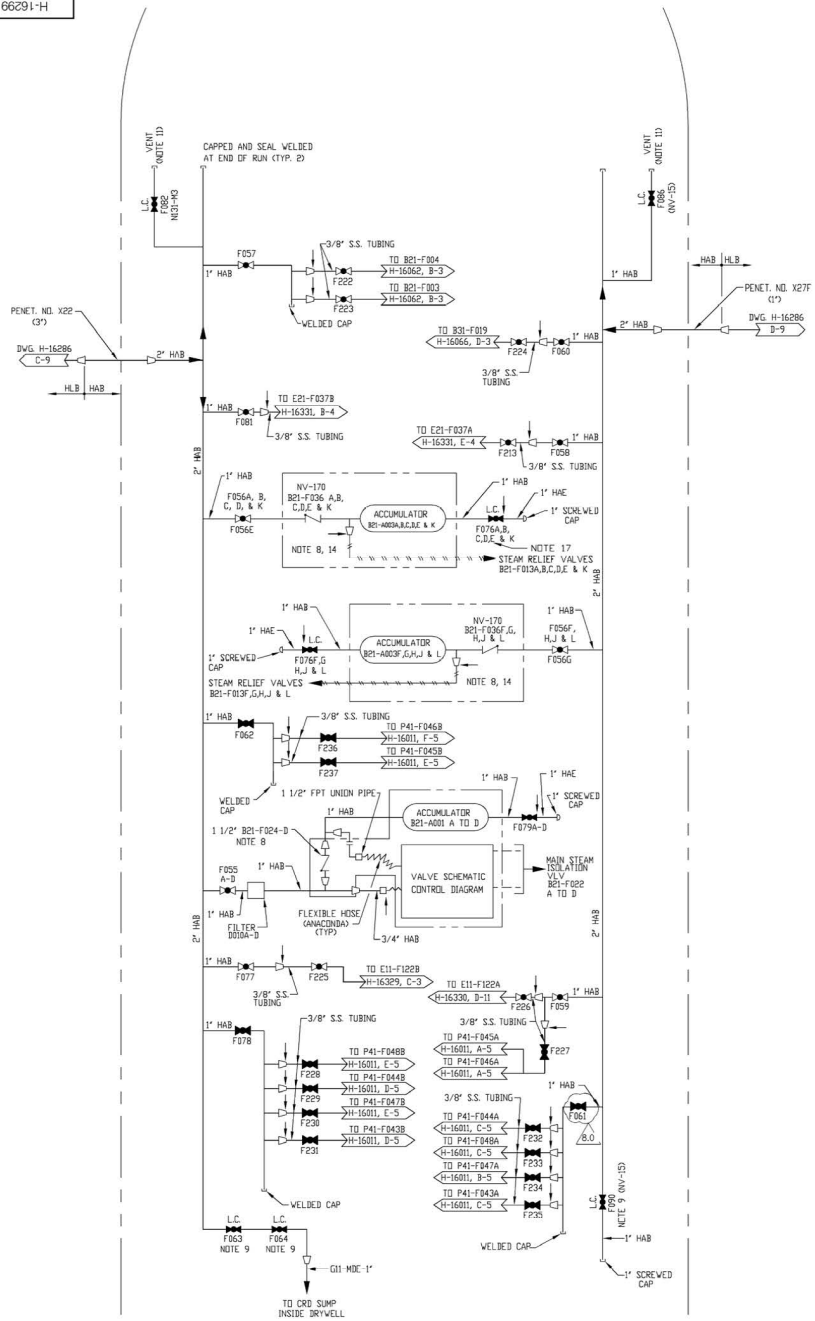

NOTE

FOR NOTES AND REFERENCES, SEE DRAWING H-16286

CRITICAL DOCUMENT

P70-1020 ACAD2000 H16299

SOUTHERN COMPANY

"This document contains proprietary, confidential, and/or trade secret information of the subsidiaries of Southern Company or of third parties. It is intended for use only by employees of, or authorized contractors of, the subsidiaries of Southern Company. Unauthorized possession, use, distribution, copying, dissemination, or disclosure of any portion hereof is prohibited."

EDWIN I. HATCH NUCLEAR PLANT UNIT No. 1
DRYWELL PNEUMATIC SYSTEM
P.&I.D. SHT.2

Version: 8.0	Date: 3-28-17
REVISED PER ADC SNC853759M003, VER. 1.0	

BY	CHK'D	APPR.
JCP	GTR	SMB

DRAWN	DESIGNED	LOCATION	DRAWING NUMBER	VERSION
KMG	LSP	10-502	H-16299	8.0
DATE	SCALE			
7/5/83	None			

DRAWING CATEGORY: CRITICAL

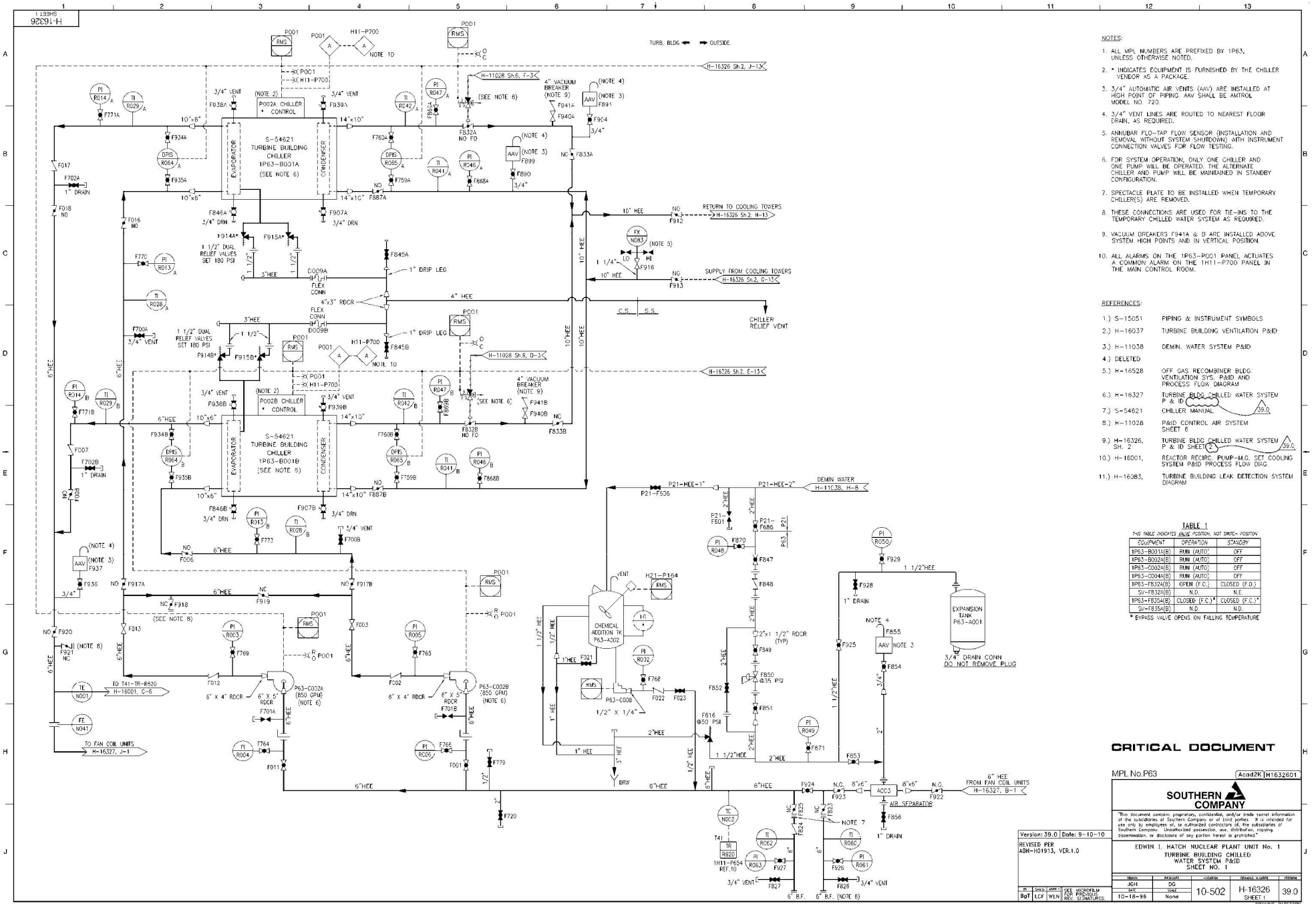

NOTES:

1. ALL MPL NUMBERS ARE PREFIXED BY 1P63, UNLESS OTHERWISE NOTED.
2. * INDICATES EQUIPMENT IS FURNISHED BY THE CHILLER VENDOR AS A PACKAGE.
3. 3/4" AUTOMATIC AIR VENTS (AAV) ARE INSTALLED AT HIGH POINT OF PIPING. AAV SHALL BE AMTROL MODEL NO. 720.
4. 3/4" VENT LINES ARE ROUTED TO NEAREST FLOOR DRAIN, AS REQUIRED.
5. ANNUBAR FLO-TAP FLOW SENSOR (INSTALLATION AND REMOVAL WITHOUT SYSTEM SHUTDOWN) WITH INSTRUMENT CONNECTION VALVES FOR FLOW TESTING.
6. FOR SYSTEM OPERATION, ONLY ONE CHILLER AND ONE PUMP WILL BE OPERATED. THE ALTERNATE CHILLER AND PUMP WILL BE MAINTAINED IN STANDBY CONFIGURATION.
7. SPECTACLE PLATE TO BE INSTALLED WHEN TEMPORARY CHILLER(S) ARE REMOVED.
8. THESE CONNECTIONS ARE USED FOR TIE-INS TO THE TEMPORARY CHILLED WATER SYSTEM AS REQUIRED.
9. VACUUM BREAKERS F941A & B ARE INSTALLED ABOVE SYSTEM HIGH POINTS AND IN VERTICAL POSITION.
10. ALL ALARMS ON THE 1P63-P001 PANEL ACTUATES A COMMON ALARM ON THE 1H11-P700 PANEL IN THE MAIN CONTROL ROOM.

REFERENCES:

1.) S-15051 PIPING & INSTRUMENT SYMBOLS
2.) H-16037 TURBINE BUILDING VENTILATION P&ID
3.) H-11038 DEMIN. WATER SYSTEM P&ID
4.) DELETED
5.) H-16528 OFF GAS RECOMBINER BLDG VENTILATION SYS. P&ID AND PROCESS FLOW DIAGRAM
6.) H-16327 TURBINE BLDG CHILLED WATER SYSTEM P & ID (39.0)
7.) S-54621 CHILLER MANUAL
8.) H-11028 P&ID CONTROL AIR SYSTEM SHEET 6
9.) H-16326, SH. 2 TURBINE BLDG CHILLED WATER SYSTEM P & ID SHEET (2) (39.0)
10.) H-16001, REACTOR RECIRC. PUMP-M.G. SET COOLING SYSTEM P&ID PROCESS FLOW DIAG.
11.) H-16083, TURBINE BUILDING LEAK DETECTION SYSTEM DIAGRAM

TABLE 1

THIS TABLE INDICATES VALVE POSITION, NOT SWITCH POSITION

EQUIPMENT	OPERATION	STANDBY
1P63-B001A(B)	RUN (AUTO)	OFF
1P63-B002A(B)	RUN (AUTO)	OFF
1P63-C002A(B)	RUN (AUTO)	OFF
1P63-C004A(B)	RUN (AUTO)	OFF
1P63-F832A(B)	OPEN (F.C.)	CLOSED (F.O.)
SV-F832A(B)	N.D.	N.E.
1P63-F835A(B)	CLOSED (F.C.)*	CLOSED (F.C.)*
SV-F835A(B)	N.D.	N.D.

* BYPASS VALVE OPENS ON FALLING TEMPERATURE

CRITICAL DOCUMENT

MPL No.P63 Acad2K H1632601

SOUTHERN COMPANY

"This document contains proprietary, confidential, and/or trade secret information of the subsidiaries of Southern Company or of third parties. It is intended for use only by employees of, or authorized contractors of, the subsidiaries of Southern Company. Unauthorized possession, use, distribution, copying, dissemination, or disclosure of any portion hereof is prohibited."

EDWIN I. HATCH NUCLEAR PLANT UNIT No. 1
TURBINE BUILDING CHILLED WATER SYSTEM P&ID
SHEET NO. 1

DRAWN	REVISED	LOCATION	DRAWING NUMBER	VERSION
JGH	DG	10-502	H-16326 SHEET 1	39.0
DATE	SCALE			
10-18-95	None			

DRAWING CATEGORY: CRITICAL

Version: 39.0 Date: 9-10-10

REVISED PER ABN-H01913, VER.1.0

BY	CHKD	APPR'D	SEE MICROFILM FOR PREVIOUS REV. SIGNATURES.
BGT	LCF	WLN	

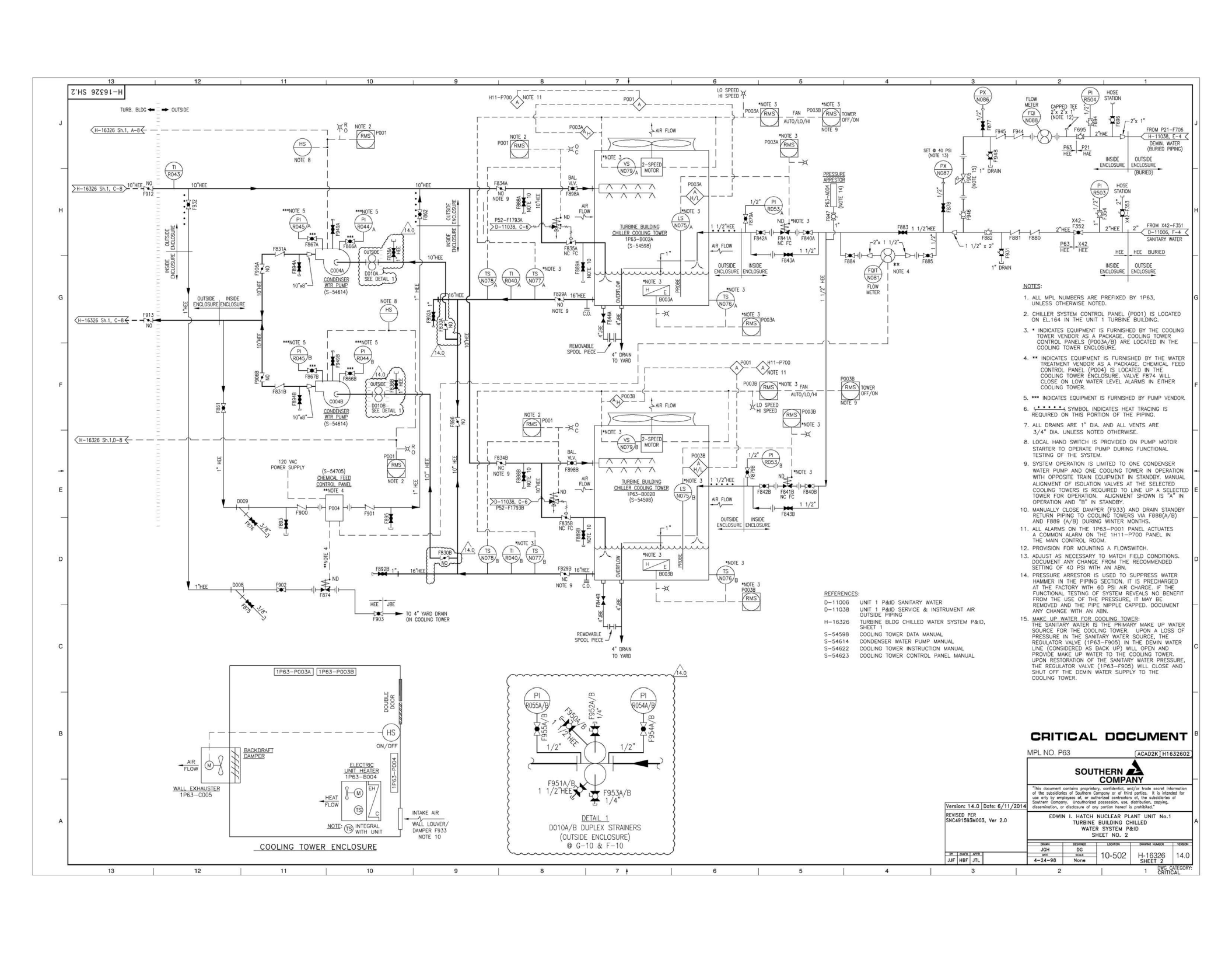

NOTES:

1. ALL MPL NUMBERS ARE PREFIXED BY 1P63, UNLESS OTHERWISE NOTED.
2. CHILLER SYSTEM CONTROL PANEL (P001) IS LOCATED ON EL.164 IN THE UNIT 1 TURBINE BUILDING.
3. * INDICATES EQUIPMENT IS FURNISHED BY THE COOLING TOWER VENDOR AS A PACKAGE. COOLING TOWER CONTROL PANELS (P003A/B) ARE LOCATED IN THE COOLING TOWER ENCLOSURE.
4. ** INDICATES EQUIPMENT IS FURNISHED BY THE WATER TREATMENT VENDOR AS A PACKAGE. CHEMICAL FEED CONTROL PANEL (P004) IS LOCATED IN THE COOLING TOWER ENCLOSURE. VALVE F874 WILL CLOSE ON LOW WATER LEVEL ALARMS IN EITHER COOLING TOWER.
5. *** INDICATES EQUIPMENT IS FURNISHED BY PUMP VENDOR.
6. SYMBOL INDICATES HEAT TRACING IS REQUIRED ON THIS PORTION OF THE PIPING.
7. ALL DRAINS ARE 1" DIA. AND ALL VENTS ARE 3/4" DIA. UNLESS NOTED OTHERWISE.
8. LOCAL HAND SWITCH IS PROVIDED ON PUMP MOTOR STARTER TO OPERATE PUMP DURING FUNCTIONAL TESTING OF THE SYSTEM.
9. SYSTEM OPERATION IS LIMITED TO ONE CONDENSER WATER PUMP AND ONE COOLING TOWER IN OPERATION WITH OPPOSITE TRAIN EQUIPMENT IN STANDBY. MANUAL ALIGNMENT OF ISOLATION VALVES AT THE SELECTED COOLING TOWERS IS REQUIRED TO LINE-UP A SELECTED TOWER FOR OPERATION. ALIGNMENT SHOWN IS "A" IN OPERATION AND "B" IN STANDBY.
10. MANUALLY CLOSE DAMPER (F933) AND DRAIN STANDBY RETURN PIPING TO COOLING TOWERS VIA F888(A/B) AND F889 (A/B) DURING WINTER MONTHS.
11. ALL ALARMS ON THE 1P63-P001 PANEL ACTUATES A COMMON ALARM ON THE 1H11-P700 PANEL IN THE MAIN CONTROL ROOM.
12. PROVISION FOR MOUNTING A FLOWSWITCH.
13. ADJUST AS NECESSARY TO MATCH FIELD CONDITIONS. DOCUMENT ANY CHANGE FROM THE RECOMMENDED SETTING OF 40 PSI WITH AN ABN.
14. PRESSURE ARRESTOR IS USED TO SUPPRESS WATER HAMMER IN THE PIPING SECTION. IT IS PRECHARGED AT THE FACTORY WITH 60 PSI AIR CHARGE. IF THE FUNCTIONAL TESTING OF SYSTEM REVEALS NO BENEFIT FROM THE USE OF THE PRESSURE, IT MAY BE REMOVED AND THE PIPE NIPPLE CAPPED. DOCUMENT ANY CHANGE WITH AN ABN.
15. MAKE UP WATER FOR COOLING TOWER: THE SANITARY WATER IS THE PRIMARY MAKE UP WATER SOURCE FOR THE COOLING TOWER. UPON A LOSS OF PRESSURE IN THE SANITARY WATER SOURCE, THE REGULATOR VALVE (1P63-F905) IN THE DEMIN WATER LINE (CONSIDERED AS BACK UP) WILL OPEN AND PROVIDE MAKE UP WATER TO THE COOLING TOWER. UPON RESTORATION OF THE SANITARY WATER PRESSURE, THE REGULATOR VALVE (1P63-F905) WILL CLOSE AND SHUT OFF THE DEMIN WATER SUPPLY TO THE COOLING TOWER.

REFERENCES:

D-11006	UNIT 1 P&ID SANITARY WATER
D-11038	UNIT 1 P&ID SERVICE & INSTRUMENT AIR OUTSIDE PIPING
H-16326	TURBINE BLDG CHILLED WATER SYSTEM P&ID, SHEET 1
S-54598	COOLING TOWER DATA MANUAL
S-54614	CONDENSER WATER PUMP MANUAL
S-54622	COOLING TOWER INSTRUCTION MANUAL
S-54623	COOLING TOWER CONTROL PANEL MANUAL

CRITICAL DOCUMENT

MPL NO. P63 ACAD2K H1632602

SOUTHERN COMPANY

"This document contains proprietary, confidential, and/or trade secret information of the subsidiaries of Southern Company or of third parties. It is intended for use only by employees of, or authorized contractors of, the subsidiaries of Southern Company. Unauthorized possession, use, distribution, copying, dissemination, or disclosure of any portion hereof is prohibited."

EDWIN I. HATCH NUCLEAR PLANT UNIT No.1
TURBINE BUILDING CHILLED WATER SYSTEM P&ID
SHEET NO. 2

Version: 14.0 Date: 6/11/2014
REVISED PER SNC491593M003, Ver 2.0

BY	CHK'D	APPR
JJF	HBF	JTL

DRAWN	DESIGNED	LOCATION	DRAWING NUMBER	VERSION
JGH	DG	10-502	H-16326 SHEET 2	14.0
DATE	SCALE			
4-24-98	None			

DWG CATEGORY: CRITICAL

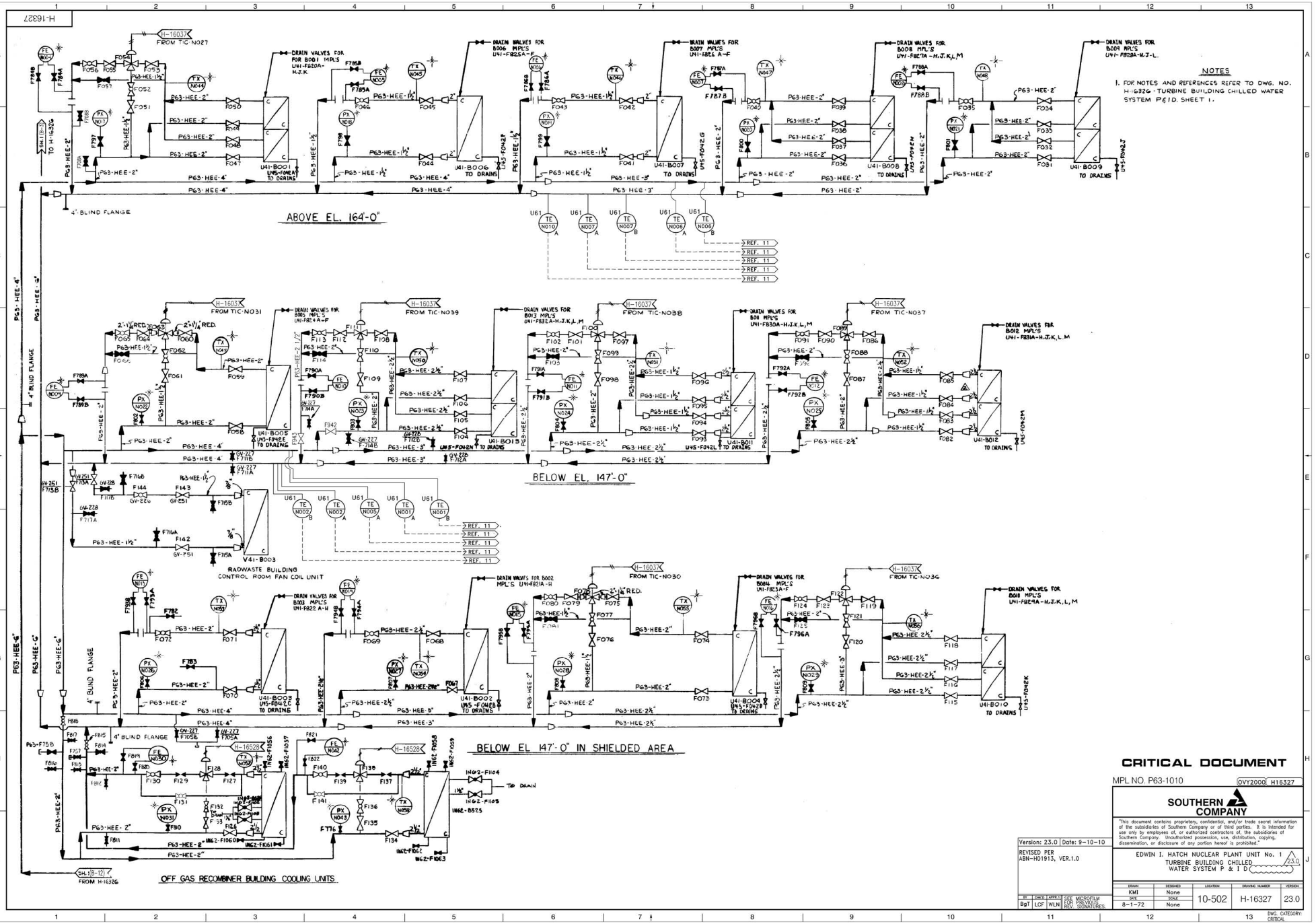

CRITICAL DOCUMENT

MPL NO. P63-1010 OVY2000 H16327

SOUTHERN COMPANY

"This document contains proprietary, confidential, and/or trade secret information of the subsidiaries of Southern Company or of third parties. It is intended for use only by employees of, or authorized contractors of, the subsidiaries of Southern Company. Unauthorized possession, use, distribution, copying, dissemination, or disclosure of any portion hereof is prohibited."

EDWIN I. HATCH NUCLEAR PLANT UNIT No. 1
TURBINE BUILDING CHILLED WATER SYSTEM P & I D

DRAWN	DESIGNED	LOCATION	DRAWING NUMBER	VERSION
KMI	None	10-502	H-16327	23.0
DATE	SCALE			
8-1-72	None			

BY	CHK'D	APPR'D
BgT	LCF	WLN

SEE MICROFILM FOR PREVIOUS REV. SIGNATURES.

Version: 23.0 | Date: 9-10-10

REVISED PER ABN-H01913, VER.1.0

DWG. CATEGORY: CRITICAL

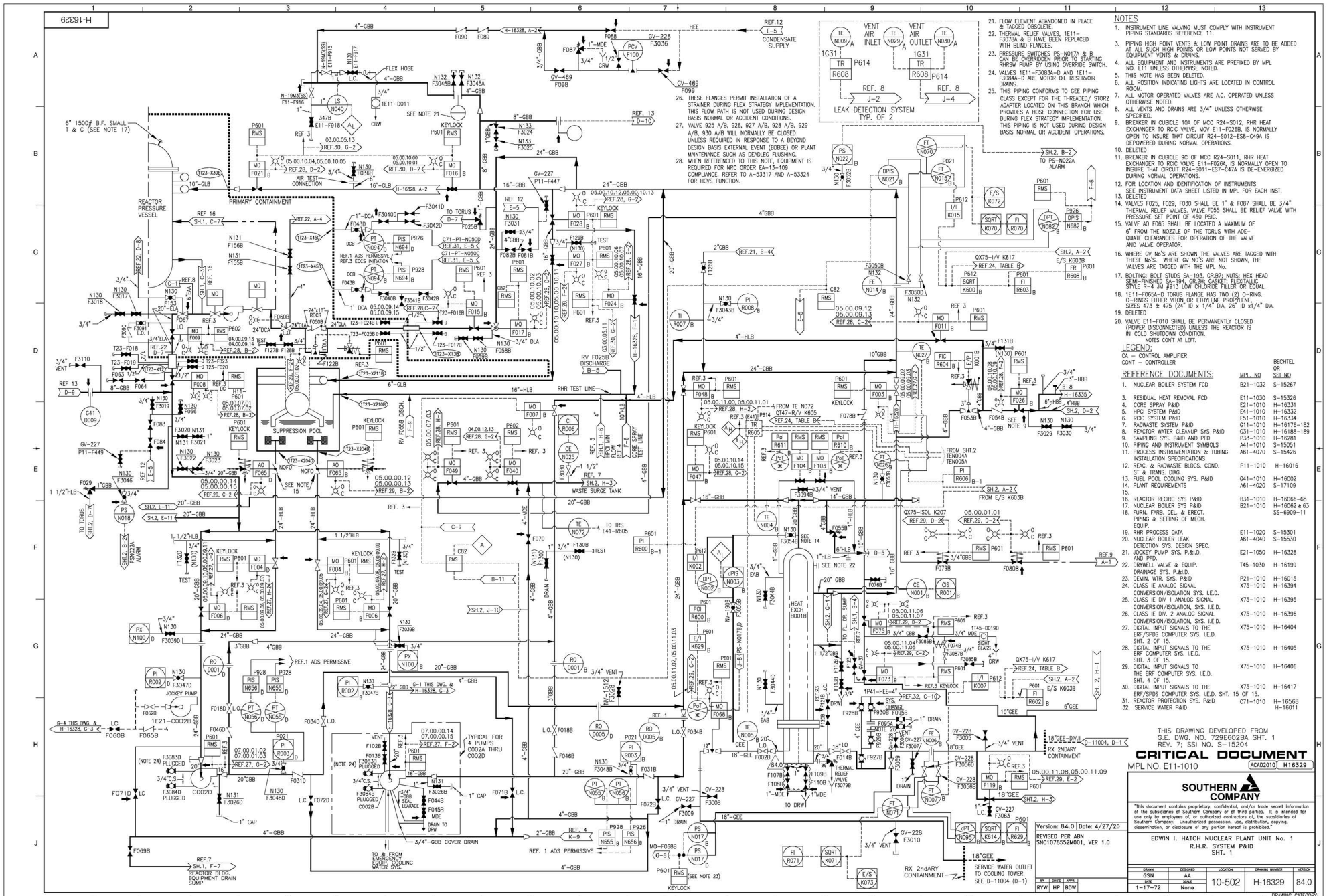

NOTES

1. INSTRUMENT LINE VALVING MUST COMPLY WITH INSTRUMENT PIPING STANDARDS REFERENCE 11.
3. PIPING HIGH POINT VENTS & LOW POINT DRAINS ARE TO BE ADDED AT ALL SUCH HIGH POINTS OR LOW POINTS NOT SERVED BY EQUIPMENT VENTS & DRAINS.
4. ALL EQUIPMENT AND INSTRUMENTS ARE PREFIXED BY MPL NO. E11 UNLESS OTHERWISE NOTED.
5. THIS NOTE HAS BEEN DELETED.
6. ALL POSITION INDICATING LIGHTS ARE LOCATED IN CONTROL ROOM.
7. ALL MOTOR OPERATED VALVES ARE A.C. OPERATED UNLESS OTHERWISE NOTED.
8. ALL VENTS AND DRAINS ARE 3/4" UNLESS OTHERWISE SPECIFIED.
9. BREAKER IN CUBICLE 10A OF MCC R24-S012, RHR HEAT EXCHANGER TO RCIC VALVE, MOV E11-F026B, IS NORMALLY OPEN TO INSURE THAT CIRCUIT R24-S012-ES8-C49A IS DEPOWERED DURING NORMAL OPERATIONS.
10. DELETED
11. BREAKER IN CUBICLE 9C OF MCC R24-S011, RHR HEAT EXCHANGER TO RCIC VALVE E11-F026A, IS NORMALLY OPEN TO INSURE THAT CIRCUIT R24-S011-ES7-C47A IS DE-ENERGIZED DURING NORMAL OPERATIONS.
12. FOR LOCATION AND IDENTIFICATION OF INSTRUMENTS SEE INSTRUMENT DATA SHEET LISTED IN MPL FOR EACH INST.
13. DELETED
14. VALVES F025, F029, F030 SHALL BE 1" & F087 SHALL BE 3/4" THERMAL RELIEF VALVES. VALVE F055 SHALL BE RELIEF VALVE WITH PRESSURE SET POINT OF 450 PSIG.
15. VALVE AO F065 SHALL BE LOCATED A MAXIMUM OF 6" FROM THE NOZZLE OF THE TORUS WITH ADE-QUATE CLEARANCES FOR OPERATION OF THE VALVE AND VALVE OPERATOR.
16. WHERE GV NO'S ARE SHOWN THE VALVES ARE TAGGED WITH THESE NO'S. WHERE GV NO'S ARE NOT SHOWN, THE VALVES ARE TAGGED WITH THE MPL No.
17. BOLTING: BOLT STUDS SA-193, GR.B7; NUTS: HEX HEAD SEMI-FINISHED SA-194, GR.2H; GASKET: FLEXITALLIC STYLE R-4 UM #913 LOW CHLORIDE FILLER OR EQUAL.
18. 1E11-F065A-D TORUS FLANGE HAS TWO (2) O-RING. O-RINGS EITHER VITON OR ETHYLENE PROPYLENE, SIZES 473 & 475 (24" ID x 1/4" DIA, 26" ID x1/4" DIA.
19. DELETED
20. VLVE E11-F010 SHALL BE PERMANENTLY CLOSED (POWER DISCONNECTED) UNLESS THE REACTOR IS IN COLD SHUTDOWN CONDITION.
NOTES CONT AT LEFT.
21. FLOW ELEMENT ABANDONED IN PLACE & TAGGED OBSOLETE.
22. THERMAL RELIEF VALVES, 1E11-F307BA & B HAVE BEEN REPLACED WITH BLIND FLANGES.
23. PRESSURE SWITCHES PS-N017A & B CAN BE OVERRIDDEN PRIOR TO STARTING RHRSW PUMP BY USING OVERRIDE SWITCH.
24. VALVES 1E11-F3083A-D AND 1E11-F3084A-D ARE MOTOR OIL RESERVOIR DRAINS.
25. THIS PIPING CONFORMS TO GEE PIPING CLASS EXCEPT FOR THE THREADED/ STORZ ADAPTER LOCATED ON THIS BRANCH WHICH PROVIDES A HOSE CONNECTION FOR USE DURING FLEX STRATEGY IMPLEMENTATION. THIS PIPING IS NOT USED DURING DESIGN BASIS NORMAL OR ACCIDENT OPERATIONS.
26. THESE FLANGES PERMIT INSTALLATION OF A STRAINER DURING FLEX STRATEGY IMPLEMENTATION. THIS FLOW PATH IS NOT USED DURING DESIGN BASIS NORMAL OR ACCIDENT CONDITIONS.
27. VALVE 925 A/B, 926, 927 A/B, 928 A/B, 929 A/B, 930 A/B WILL NORMALLY BE CLOSED UNLESS REQUIRED IN RESPONSE TO A BEYOND DESIGN BASIS EXTERNAL EVENT (BDBEE) OR PLANT MAINTENANCE SUCH AS DEADLEG FLUSHING.
28. WHEN REFERENCED TO THIS NOTE, EQUIPMENT IS REQUIRED FOR NRC ORDER EA-13-109 COMPLIANCE. REFER TO A-53317 AND A-53324 FOR HCVS FUNCTION.

LEGEND:

CA – CONTROL AMPLIFIER
CONT – CONTROLLER

REFERENCE DOCUMENTS:

		MPL NO	BECHTEL OR SSI NO
1.	NUCLEAR BOILER SYSTEM FCD	B21-1032	S-15267
3.	RESIDUAL HEAT REMOVAL FCD	E11-1030	S-15326
4.	CORE SPRAY P&ID	E21-1010	H-16331
5.	HPCI SYSTEM P&ID	E41-1010	H-16332
6.	RCIC SYSTEM P&ID	E51-1010	H-16334
7.	RADWASTE SYSTEM P&ID	G11-1010	H-16176-182
8.	REACTOR WATER CLEANUP SYS P&ID	G31-1010	H-16188-189
9.	SAMPLING SYS. P&ID AND PFD	P33-1010	H-16281
10.	PIPING AND INSTRUMENT SYMBOLS	A41-1010	S-15051
11.	PROCESS INSTRUMENTATION & TUBING INSTALLATION SPECIFICATIONS	A61-4070	S-15426
12.	REAC. & RADWASTE BLDGS. COND. SY. & TRANS. DIAG.	P11-1010	H-16016
13.	FUEL POOL COOLING SYS. P&ID	G41-1010	H-16002
14.	PLANT REQUIREMENTS	A61-4020	S-17109
15.			
16.	REACTOR RECIRC SYS P&ID	B31-1010	H-16066-68
17.	NUCLEAR BOILER SYS P&ID	B21-1010	H-16062 & 63
18.	FURN. FARB. DEL. & ERECT. PIPING & SETTING OF MECH. EQUIP.		SS-6909-11
19.	RHR PROCESS DATA	E11-1020	S-15301
20.	NUCLEAR BOILER LEAK DETECTION SYS. DESIGN SPEC.	A61-4040	S-15530
21.	JOCKEY PUMP SYS. P.&I.D. AND PFD.	E21-1050	H-16328
22.	DRYWELL VALVE & EQUIP. DRAINAGE SYS. P.&I.D.	T45-1030	H-16199
23.	DEMIN. WTR. SYS. P&ID	P21-1010	H-16015
24.	CLASS IE ANALOG SIGNAL CONVERSION/ISOLATION SYS. I.E.D.	X75-1010	H-16394
25.	CLASS IE DIV 1 ANALOG SIGNAL CONVERSION/ISOLATION, SYS. I.E.D.	X75-1010	H-16395
26.	CLASS IE DIV. 2 ANALOG SIGNAL CONVERSION/ISOLATION, SYS. I.E.D.	X75-1010	H-16396
27.	DIGITAL INPUT SIGNALS TO THE ERF/SPDS COMPUTER SYS. I.E.D. SHT. 2 OF 15.	X75-1010	H-16404
28.	DIGITAL INPUT SIGNALS TO THE ERF COMPUTER SYS. I.E.D. SHT. 3 OF 15.	X75-1010	H-16405
29.	DIGITAL INPUT SIGNALS TO THE ERF COMPUTER SYS. I.E.D. SHT. 4 OF 15.	X75-1010	H-16406
30.	DIGITAL INPUT SIGNALS TO THE ERF/SPDS COMPUTER SYS. I.E.D. SHT. 15 OF 15.	X75-1010	H-16417
31.	REACTOR PROTECTION SYS. P&ID	C71-1010	H-16568
32.	SERVICE WATER P&ID		H-16011

THIS DRAWING DEVELOPED FROM G.E. DWG. NO. 729E602BA SHT. 1 REV. 7; SSI NO. S-15204

"This document contains proprietary, confidential, and/or trade secret information of the subsidiaries of Southern Company or of third parties. It is intended for use only by employees of, or authorized contractors of, the subsidiaries of Southern Company. Unauthorized possession, use, distribution, copying, dissemination, or disclosure of any portion hereof is prohibited."

BY	CHK'D	APPR.
RYW	HP	BDW

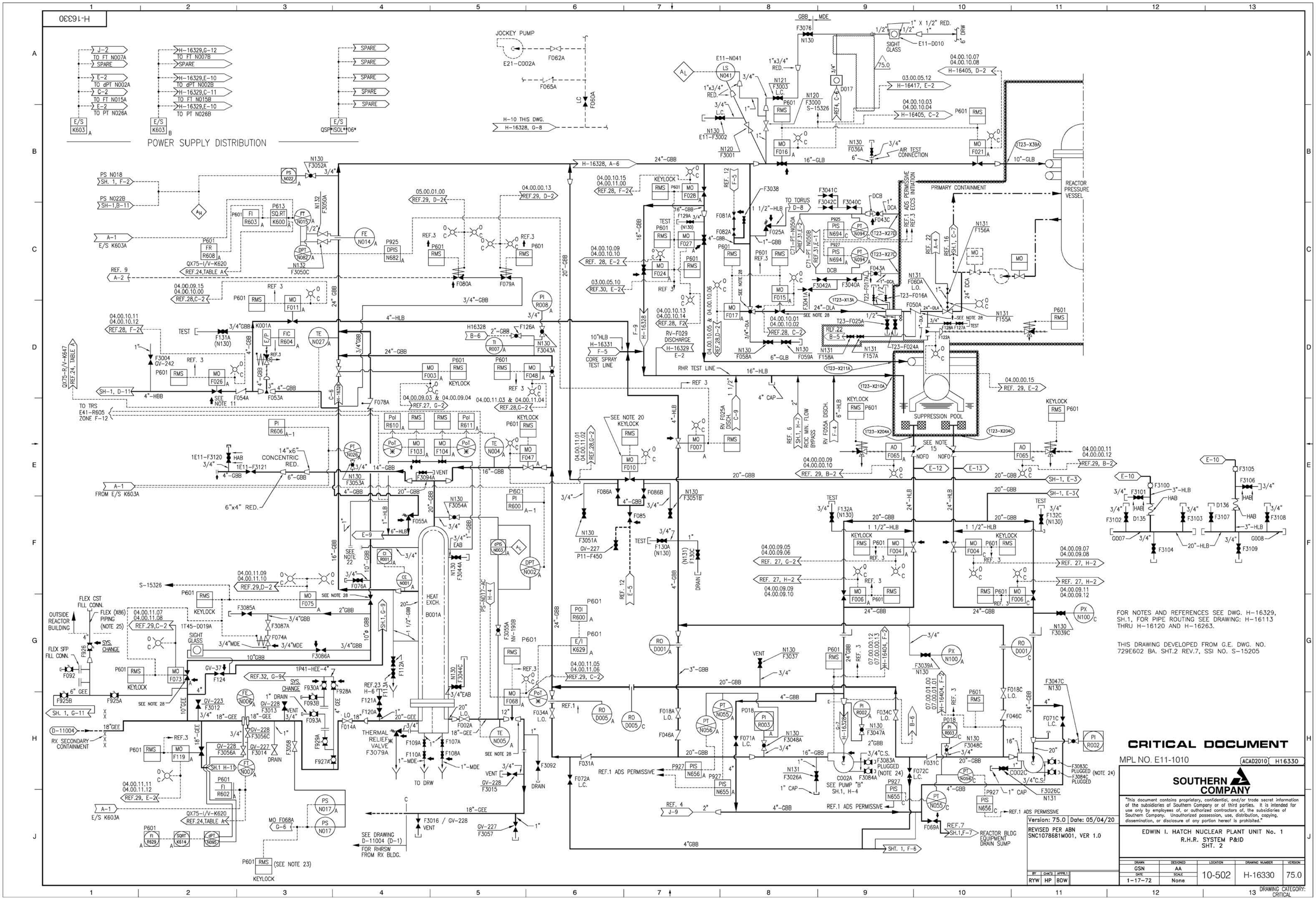

H-16330
POWER SUPPLY DISTRIBUTION
JOCKEY PUMP
E21-C002A
HEAT EXCH. B001A
THERMAL RELIEF VALVE F3079A
SUPPRESSION POOL
PRIMARY CONTAINMENT
REACTOR PRESSURE VESSEL
RHR TEST LINE
CORE SPRAY TEST LINE
C002A SEE PUMP "B" SH.1, H-4
OUTSIDE REACTOR BUILDING
RX SECONDARY CONTAINMENT
SEE DRAWING D-11004 (D-1) FOR RHRSW FROM RX BLDG.
REACTOR BLDG EQUIPMENT DRAIN SUMP
FOR NOTES AND REFERENCES SEE DWG. H-16329, SH.1. FOR PIPE ROUTING SEE DRAWING: H-16113 THRU H-16120 AND H-16263.
THIS DRAWING DEVELOPED FROM G.E. DWG. NO. 729E602 BA. SHT.2 REV.7, SSI NO. S-15205
CRITICAL DOCUMENT
MPL NO. E11-1010
ACAD2010 H16330
SOUTHERN COMPANY
"This document contains proprietary, confidential, and/or trade secret information of the subsidiaries of Southern Company or of third parties. It is intended for use only by employees of, or authorized contractors of, the subsidiaries of Southern Company. Unauthorized possession, use, distribution, copying, dissemination, or disclosure of any portion hereof is prohibited."
Version: 75.0 Date: 05/04/20
REVISED PER ABN SNC1078681M001, VER 1.0
EDWIN I. HATCH NUCLEAR PLANT UNIT No. 1
R.H.R. SYSTEM P&ID
SHT. 2
DRAWN GSN DESIGNED AA LOCATION DRAWING NUMBER VERSION
DATE 1-17-72 SCALE None 10-502 H-16330 75.0
BY RYW CHK'D HP APPR'D BDW
DRAWING CATEGORY: CRITICAL

H-16331

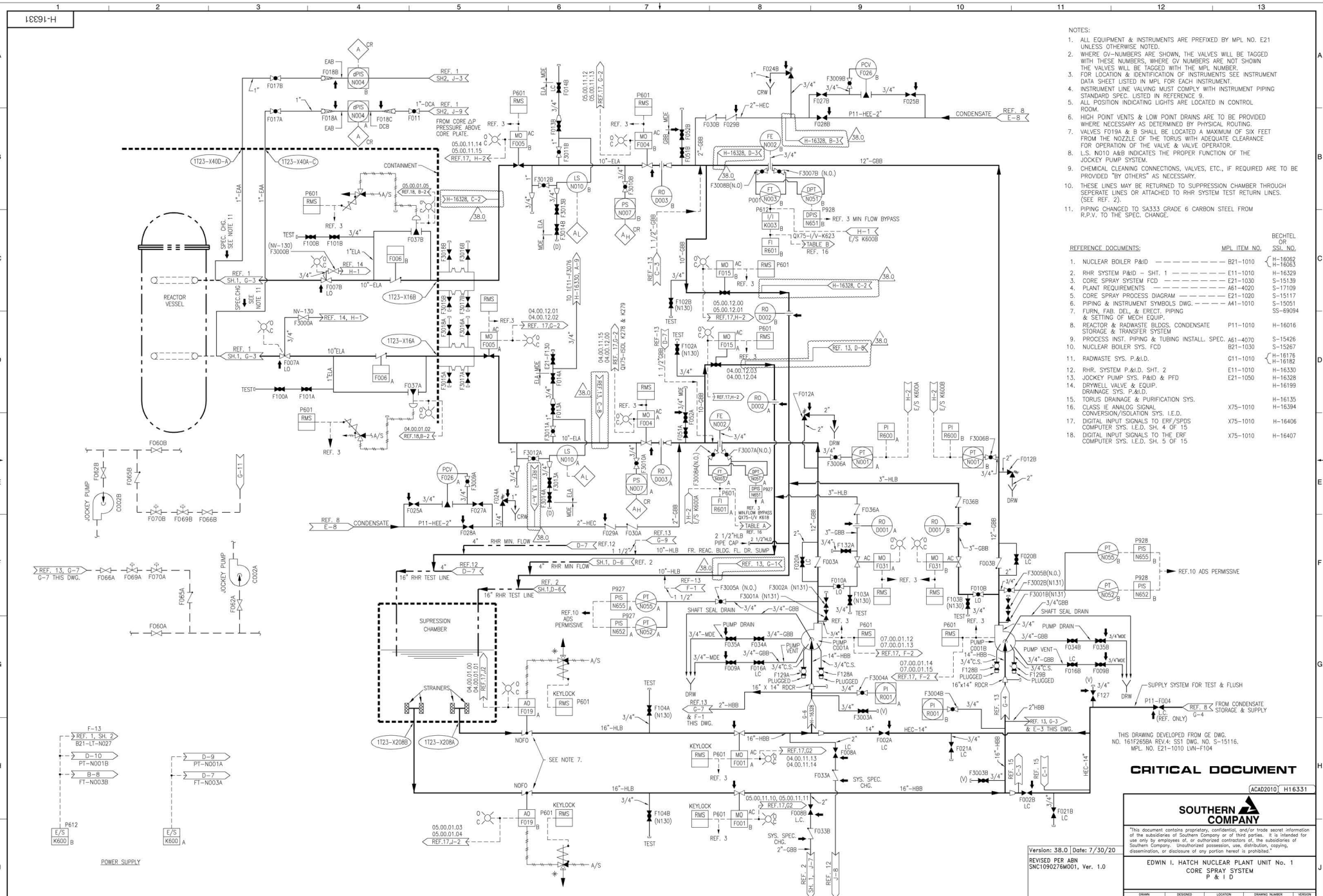
NOTES:
1. ALL EQUIPMENT & INSTRUMENTS ARE PREFIXED BY MPL NO. E21 UNLESS OTHERWISE NOTED.
2. WHERE GV-NUMBERS ARE SHOWN, THE VALVES WILL BE TAGGED WITH THESE NUMBERS, WHERE GV NUMBERS ARE NOT SHOWN THE VALVES WILL BE TAGGED WITH THE MPL NUMBER.
3. FOR LOCATION & IDENTIFICATION OF INSTRUMENTS SEE INSTRUMENT DATA SHEET LISTED IN MPL FOR EACH INSTRUMENT.
4. INSTRUMENT LINE VALVING MUST COMPLY WITH INSTRUMENT PIPING STANDARD SPEC. LISTED IN REFERENCE 9.
5. ALL POSITION INDICATING LIGHTS ARE LOCATED IN CONTROL ROOM.
6. HIGH POINT VENTS & LOW POINT DRAINS ARE TO BE PROVIDED WHERE NECESSARY AS DETERMINED BY PHYSICAL ROUTING.
7. VALVES F019A & B SHALL BE LOCATED A MAXIMUM OF SIX FEET FROM THE NOZZLE OF THE TORUS WITH ADEQUATE CLEARANCE FOR OPERATION OF THE VALVE & VALVE OPERATOR.
8. L.S. N010 A&B INDICATES THE PROPER FUNCTION OF THE JOCKEY PUMP SYSTEM.
9. CHEMICAL CLEANING CONNECTIONS, VALVES, ETC., IF REQUIRED ARE TO BE PROVIDED "BY OTHERS" AS NECESSARY.
10. THESE LINES MAY BE RETURNED TO SUPPRESSION CHAMBER THROUGH SEPERATE LINES OR ATTACHED TO RHR SYSTEM TEST RETURN LINES. (SEE REF. 2).
11. PIPING CHANGED TO SA333 GRADE 6 CARBON STEEL FROM R.P.V. TO THE SPEC. CHANGE.
REFERENCE DOCUMENTS: MPL ITEM NO. BECHTEL OR SSI. NO.
1. NUCLEAR BOILER P&ID B21-1010 H-16062 H-16063
2. RHR SYSTEM P&ID – SHT. 1 E11-1010 H-16329
3. CORE SPRAY SYSTEM FCD E21-1030 S-15139
4. PLANT REQUIREMENTS A61-4020 S-17109
5. CORE SPRAY PROCESS DIAGRAM E21-1020 S-15117
6. PIPING & INSTRUMENT SYMBOLS DWG. A41-1010 S-15051
7. FURN, FAB. DEL, & ERECT. PIPING & SETTING OF MECH EQUIP. SS-69094
8. REACTOR & RADWASTE BLDGS. CONDENSATE STORAGE & TRANSFER SYSTEM P11-1010 H-16016
9. PROCESS INST. PIPING & TUBING INSTALL. SPEC. A61-4070 S-15426
10. NUCLEAR BOILER SYS. FCD B21-1030 S-15267
11. RADWASTE SYS. P.&I.D. G11-1010 H-16176 H-16182
12. RHR. SYSTEM P.&I.D. SHT. 2 E11-1010 H-16330
13. JOCKEY PUMP SYS. P&ID & PFD E21-1050 H-16328
14. DRYWELL VALVE & EQUIP. DRAINAGE SYS. P.&I.D. H-16199
15. TORUS DRAINAGE & PURIFICATION SYS. H-16135
16. CLASS IE ANALOG SIGNAL CONVERSION/ISOLATION SYS. I.E.D. X75-1010 H-16394
17. DIGITAL INPUT SIGNALS TO ERF/SPDS COMPUTER SYS. I.E.D. SH. 4 OF 15 X75-1010 H-16406
18. DIGITAL INPUT SIGNALS TO THE ERF COMPUTER SYS. I.E.D. SH. 5 OF 15 X75-1010 H-16407
REACTOR VESSEL
CONTAINMENT
SUPRESSION CHAMBER
STRAINERS
JOCKEY PUMP C002B
JOCKEY PUMP C002A
POWER SUPPLY
CONDENSATE
SUPPLY SYSTEM FOR TEST & FLUSH
FROM CONDENSATE STORAGE & SUPPLY
FROM CORE ΔP PRESSURE ABOVE CORE PLATE.
SHAFT SEAL DRAIN
PUMP DRAIN
PUMP VENT
MINFLOW BYPASS QX75-I/V K618
FR. REAC. BLDG. FL. DR. SUMP
RHR MIN. FLOW
RHR TEST LINE
ADS PERMISSIVE
SYS. SPEC. CHG.
THIS DRAWING DEVELOPED FROM GE DWG. NO. 161F265BA REV:4; SSI DWG. NO. S-15116, MPL NO. E21-1010 LVN-F104
CRITICAL DOCUMENT
ACAD2010 H16331
SOUTHERN COMPANY
"This document contains proprietary, confidential, and/or trade secret information of the subsidiaries of Southern Company or of third parties. It is intended for use only by employees of, or authorized contractors of, the subsidiaries of Southern Company. Unauthorized possession, use, distribution, copying, dissemination, or disclosure of any portion hereof is prohibited."
EDWIN I. HATCH NUCLEAR PLANT UNIT No. 1
CORE SPRAY SYSTEM
P & I D
Version: 38.0 Date: 7/30/20
REVISED PER ABN SNC1090276M001, Ver. 1.0
BY RYW CHK'D BWB APPR. BDW
DRAWN GSN DESIGNED AA LOCATION 10-502 DRAWING NUMBER H-16331 VERSION 38.0
DATE 1-14-72 SCALE None
DRAWING CATEGORY: CRITICAL

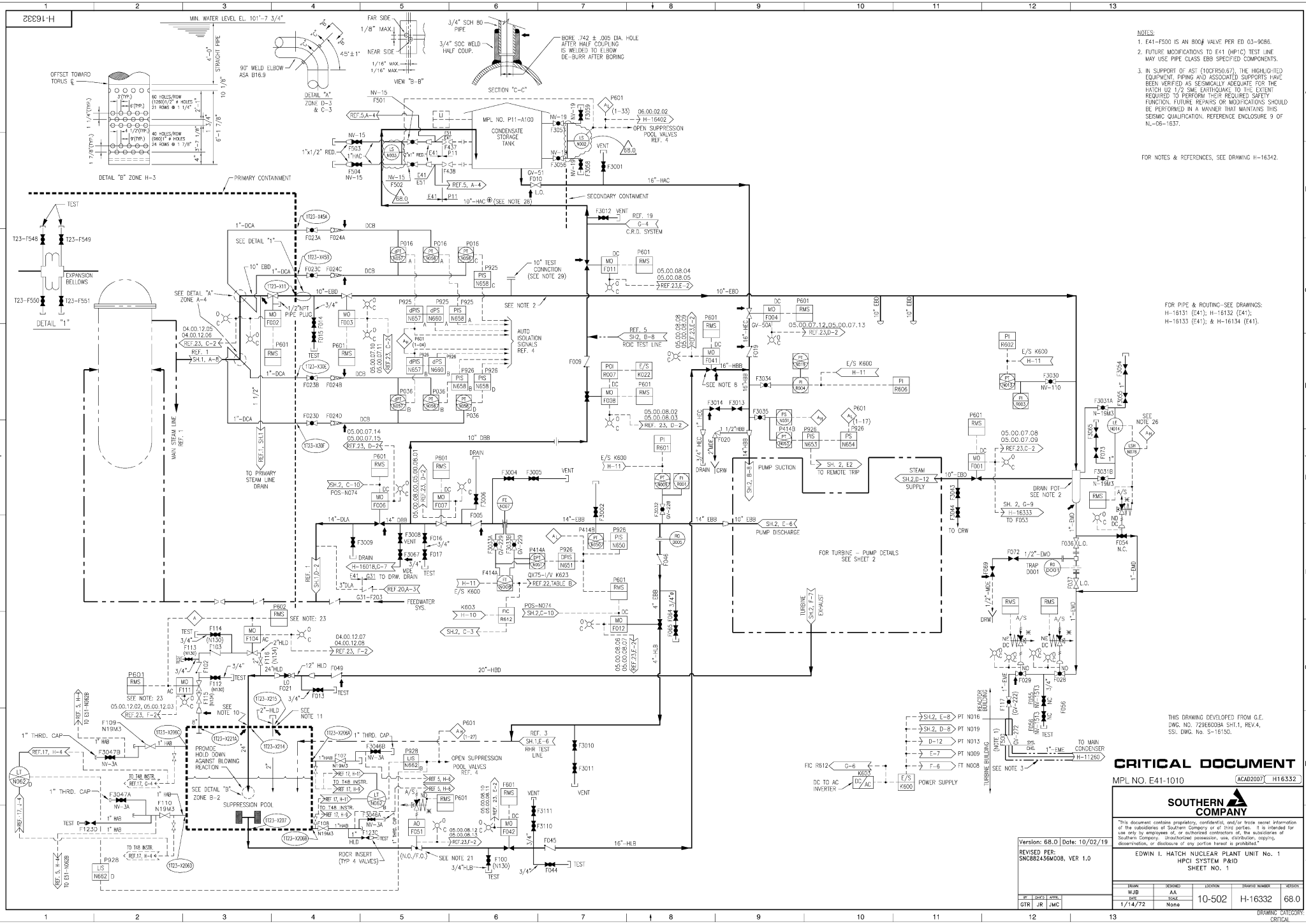
H-16332
MIN. WATER LEVEL EL. 101'-7 3/4"
4'-0" STRAIGHT PIPE
10 1/8"
OFFSET TOWARD TORUS ℄
60 HOLES/ROW (1280)1/2" ø HOLES 21 ROWS @ 1 1/4"
40 HOLES/ROW (960)1" ø HOLES 24 ROWS @ 1 7/8"
DETAIL "B" ZONE H-3
90° WELD ELBOW ASA B16.9
DETAIL "A" ZONE D-3 & C-3
FAR SIDE 1/8" MAX.
NEAR SIDE 1/16" MAX. 1/16" MAX.
VIEW "B-B"
3/4" SCH 80 PIPE
3/4" SOC WELD HALF COUP.
BORE .742 ± .005 DIA. HOLE AFTER HALF COUPLING IS WELDED TO ELBOW DE-BURR AFTER BORING
SECTION "C-C"
NOTES:
1. E41-F500 IS AN 800# VALVE PER ED 03-9086.
2. FUTURE MODIFICATIONS TO E41 (HP1C) TEST LINE, MAY USE PIPE CLASS EB8 SPECIFIED COMPONENTS.
3. IN SUPPORT OF AST (10CFR50.67), THE HIGHLIGHTED EQUIPMENT, PIPING AND ASSOCIATED SUPPORTS HAVE BEEN VERIFIED AS SEISMICALLY ADEQUATE FOR THE HATCH U2 1/2 SMC EARTHQUAKE TO THE EXTENT REQUIRED TO PERFORM THEIR REQUIRED SAFETY FUNCTION. FUTURE REPAIRS OR MODIFICATIONS SHOULD BE PERFORMED IN A MANNER THAT MAINTAINS THIS SEISMIC QUALIFICATION. REFERENCE ENCLOSURE 9 OF NL-06-1637.
FOR NOTES & REFERENCES, SEE DRAWING H-16342.
PRIMARY CONTAINMENT
SECONDARY CONTAINMENT
MPL NO. P11-A100
CONDENSATE STORAGE TANK
DETAIL "1"
EXPANSION BELLOWS
TEST
T23-F548
T23-F549
T23-F550
T23-F551
SEE DETAIL "1"
SEE DETAIL "A" ZONE A-4
1"-DCA
10"-EBD
10" EBD
1"-DCA
DCB
1/2"NPT PIPE PLUG
3/4"
T015 TYP.
10" TEST CONNCTION (SEE NOTE 29)
SEE NOTE 2
AUTO ISOLATION SIGNALS REF. 4
MAIN STEAM LINE REF. 1
TO PRIMARY STEAM LINE DRAIN
10" DBB
14"-DLA
14" DBB
16"-HAC
10"-HAC (SEE NOTE 28)
16"-HBB
14"-EBB
10" EBB
20"-HBD
4"-HLB
3"DLA
4" EBB
1"-EMD
1"-EME
1/2"-MDE
1/2"-EMD
1/2"HBB
2"MDE
1" HEC
3/4" DRAIN
2"MDE
DRAIN
VENT
TEST
FEEDWATER SYS.
TO CRW
STEAM SH.2,D-12 SUPPLY
PUMP SUCTION
PUMP DISCHARGE
TO REMOTE TRIP
DRAIN POT SEE NOTE 2
TO F053
TO TURBINE
TURBINE EXHAUST
FOR TURBINE – PUMP DETAILS SEE SHEET 2
SUPPRESSION POOL
PROVIDE HOLD DOWN AGAINST BLOWING REACTION
SEE DETAIL "B" ZONE B-2
OPEN SUPPRESSION POOL VALVES REF. 4
RHR TEST LINE
RCIC TEST LINE
REACTOR BUILDING
TURBINE BUILDING
TO MAIN CONDENSER H-17260
POWER SUPPLY
DC TO AC INVERTER
FIC R612
SEE NOTE 3
1" THRD. CAP
1" HAB
2"-HLD
12" HLD
24"HLD
ROCR INSERT (TYP 4 VALVES)
SEE NOTE 21
(N.O./F.O.)
SEE NOTE 10
SEE NOTE 11
SEE NOTE 23
SEE NOTE 8
SEE NOTE 26
FOR PIPE & ROUTING–SEE DRAWINGS: H-16131 (E41); H-16132 (E41); H-16133 (E41); & H-16134 (E41).
THIS DRAWING DEVELOPED FROM G.E. DWG. NO. 729E600BA SHT.1, REV.4, SSI. DWG. No. S-16150.
CRITICAL DOCUMENT
MPL NO. E41-1010
ACAD2007 H16332
SOUTHERN COMPANY
"This document contains proprietary, confidential, and/or trade secret information of the subsidiaries of Southern Company or of third parties. It is intended for use only by employees of, or authorized contractors of, the subsidiaries of Southern Company. Unauthorized possession, use, distribution, copying, dissemination, or disclosure of any portion hereof is prohibited."
EDWIN I. HATCH NUCLEAR PLANT UNIT No. 1
HPCI SYSTEM P&ID
SHEET NO. 1
Version: 68.0 Date: 10/02/19
REVISED PER: SNC882436M008, VER 1.0
DRAWN WJB
DESIGNED AA
LOCATION 10-502
DRAWING NUMBER H-16332
VERSION 68.0
DATE 1/14/72
SCALE None
BY GTR CHK'D JR APPR'D JMC
DRAWING CATEGORY: CRITICAL

H-16333

TURBINE HYDRAULIC CONTROL SYSTEM

TURBINE SUPERVISORY INSTRUMENTATION

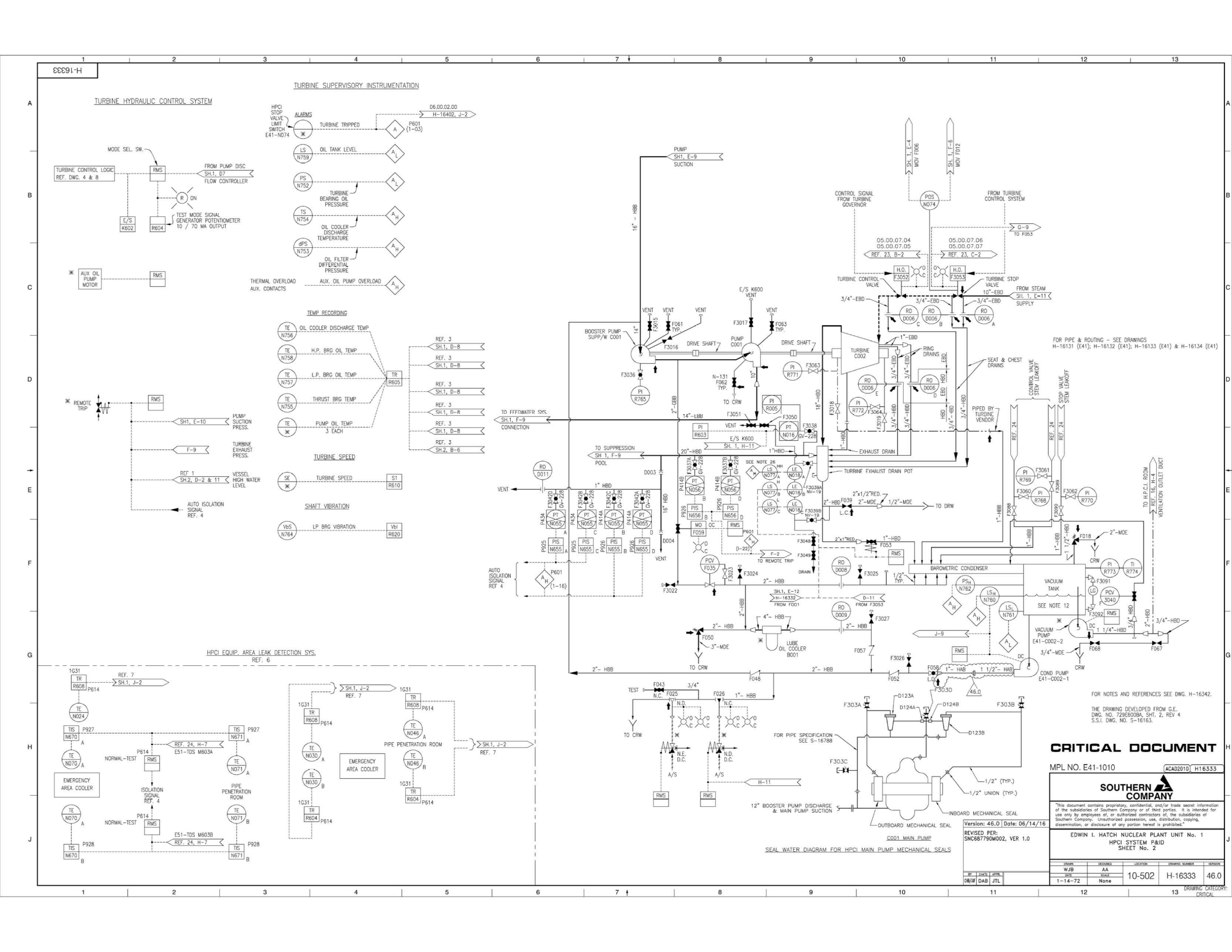

HPCI EQUIP. AREA LEAK DETECTION SYS. REF. 6

CRITICAL DOCUMENT

MPL NO. E41-1010 ACAD2010 H16333

SOUTHERN COMPANY

"This document contains proprietary, confidential, and/or trade secret information of the subsidiaries of Southern Company or of third parties. It is intended for use only by employees of, or authorized contractors of, the subsidiaries of Southern Company. Unauthorized possession, use, distribution, copying, dissemination, or disclosure of any portion hereof is prohibited."

Version: 46.0 Date: 06/14/16

REVISED PER: SNC687790M002, VER 1.0

EDWIN I. HATCH NUCLEAR PLANT UNIT No. 1
HPCI SYSTEM P&ID
SHEET No. 2

DRAWN	DESIGNED	LOCATION	DRAWING NUMBER	VERSION
WJB	AA	10-502	H-16333	46.0
DATE 1-14-72	SCALE None			

BY	CHK'D	APPR.
DB/JF	DAB	JTL

DRAWING CATEGORY: CRITICAL

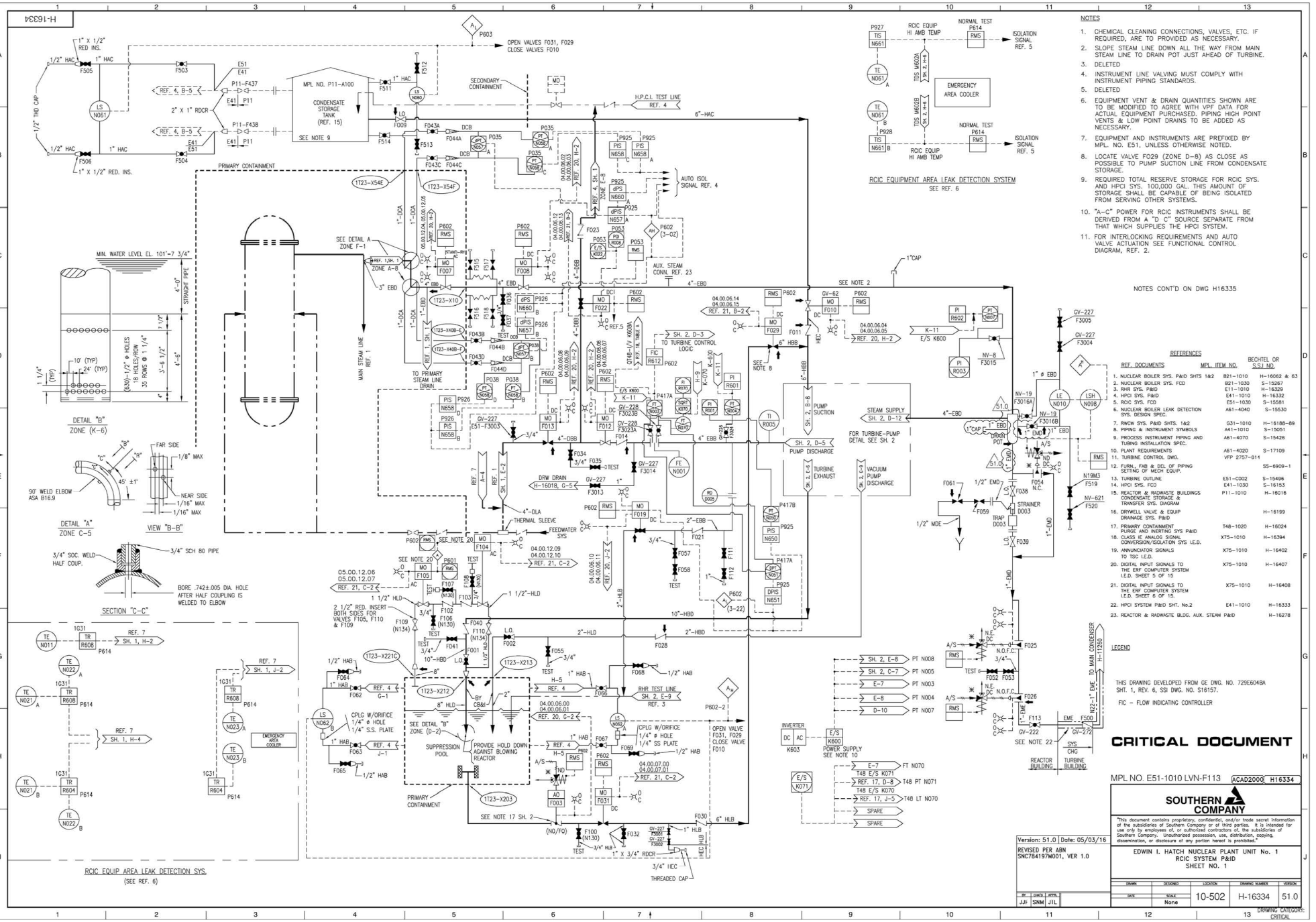
H-16334
NOTES
1. CHEMICAL CLEANING CONNECTIONS, VALVES, ETC. IF REQUIRED, ARE TO PROVIDED AS NECESSARY.
2. SLOPE STEAM LINE DOWN ALL THE WAY FROM MAIN STEAM LINE TO DRAIN POT JUST AHEAD OF TURBINE.
3. DELETED
4. INSTRUMENT LINE VALVING MUST COMPLY WITH INSTRUMENT PIPING STANDARDS.
5. DELETED
6. EQUIPMENT VENT & DRAIN QUANTITIES SHOWN ARE TO BE MODIFIED TO AGREE WITH VPF DATA FOR ACTUAL EQUIPMENT PURCHASED. PIPING HIGH POINT VENTS & LOW POINT DRAINS TO BE ADDED AS NECESSARY.
7. EQUIPMENT AND INSTRUMENTS ARE PREFIXED BY MPL. NO. E51, UNLESS OTHERWISE NOTED.
8. LOCATE VALVE F029 (ZONE D–8) AS CLOSE AS POSSIBLE TO PUMP SUCTION LINE FROM CONDENSATE STORAGE.
9. REQUIRED TOTAL RESERVE STORAGE FOR RCIC SYS. AND HPCI SYS. 100,000 GAL. THIS AMOUNT OF STORAGE SHALL BE CAPABLE OF BEING ISOLATED FROM SERVING OTHER SYSTEMS.
10. "A–C" POWER FOR RCIC INSTRUMENTS SHALL BE DERIVED FROM A "D C" SOURCE SEPARATE FROM THAT WHICH SUPPLIES THE HPCI SYSTEM.
11. FOR INTERLOCKING REQUIREMENTS AND AUTO VALVE ACTUATION SEE FUNCTIONAL CONTROL DIAGRAM, REF. 2.
NOTES CONT'D ON DWG H16335
REFERENCES
REF. DOCUMENTS | MPL. ITEM NO. | BECHTEL OR S.S.I NO.
1. NUCLEAR BOILER SYS. P&ID SHTS 1&2 | B21–1010 | H–16062 & 63
2. NUCLEAR BOILER SYS. FCD | B21–1030 | S–15267
3. RHR SYS. P&ID | E11–1010 | H–16329
4. HPCI SYS. P&ID | E41–1010 | H–16332
5. RCIC SYS. FCD | E51–1030 | S–15581
6. NUCLEAR BOILER LEAK DETECTION SYS. DESIGN SPEC. | A61–4040 | S–15530
7. RWCW SYS. P&ID SHTS. 1&2 | G31–1010 | H–16188–89
8. PIPING & INSTRUMENT SYMBOLS | A41–1010 | S–15051
9. PROCESS INSTRUMENT PIPING AND TUBING INSTALLATION SPEC. | A61–4070 | S–15426
10. PLANT REQUIREMENTS | A61–4020 | S–17109
11. TURBINE CONTROL DWG. | VFP 2757–011 |
12. TURN., FAB & DEL OF PIPING SETTING OF MECH EQUIP. | | SS–6909–1
13. TURBINE OUTLINE | E51–C002 | S–15496
14. HPCI SYS. FCD | E41–1030 | S–16153
15. REACTOR & RADWASTE BUILDINGS CONDENSATE STORAGE & TRANSFER SYS. DIAGRAM | P11–1010 | H–16016
16. DRYWELL VALVE & EQUIP DRAINAGE SYS. P&ID | | H–16199
17. PRIMARY CONTAINMENT PURGE AND INERTING SYS P&ID | T48–1020 | H–16024
18. CLASS IE ANALOG SIGNAL CONVERSION/ISOLATION SYS I.E.D. | X75–1010 | H–16394
19. ANNUNCIATOR SIGNALS TO TSC I.E.D. | X75–1010 | H–16402
20. DIGITAL INPUT SIGNALS TO THE ERF COMPUTER SYSTEM I.E.D. SHEET 6 OF 15 | X75–1010 | H–16407
21. DIGITAL INPUT SIGNALS TO THE ERF COMPUTER SYSTEM I.E.D. SHEET 6 OF 15. | X75–1010 | H–16408
22. HPCI SYSTEM P&ID SHT. No.2 | E41–1010 | H–16333
23. REACTOR & RADWASTE BLDG. AUX. STEAM P&ID | | H–16278
LEGEND
THIS DRAWING DEVELOPED FROM GE DWG. NO. 729E6048A SHT. 1, REV. 6, SSI DWG. NO. S16157.
FIC – FLOW INDICATING CONTROLLER
CRITICAL DOCUMENT
MPL NO. E51-1010 LVN-F113
ACAD2000 H16334
SOUTHERN COMPANY
"This document contains proprietary, confidential, and/or trade secret information of the subsidiaries of Southern Company or of third parties. It is intended for use only by employees of, or authorized contractors of, the subsidiaries of Southern Company. Unauthorized possession, use, distribution, copying, dissemination, or disclosure of any portion hereof is prohibited."
EDWIN I. HATCH NUCLEAR PLANT UNIT No. 1
RCIC SYSTEM P&ID
SHEET NO. 1
DRAWN | DESIGNED | LOCATION | DRAWING NUMBER | VERSION
DATE | SCALE None | 10-502 | H-16334 | 51.0
DRAWING CATEGORY: CRITICAL
Version: 51.0 | Date: 05/03/16
REVISED PER ABN SNC784197M001, VER 1.0
BY JJH | CHK'D SNM | APPR. JTL
RCIC EQUIP AREA LEAK DETECTION SYS. (SEE REF. 6)
RCIC EQUIPMENT AREA LEAK DETECTION SYSTEM SEE REF. 6
SECTION "C–C"
DETAIL "A" ZONE C–5
DETAIL "B" ZONE (K–6)
VIEW "B–B"
PRIMARY CONTAINMENT
SECONDARY CONTAINMENT
CONDENSATE STORAGE TANK (REF. 15)
MPL NO. P11–A100
SEE NOTE 9
OPEN VALVES F031, F029 CLOSE VALVES F010
H.P.C.I. TEST LINE REF. 4
AUTO ISOL SIGNAL REF. 4
AUX. STEAM CONN. REF. 23
MAIN STEAM LINE REF. 1
TO PRIMARY STEAM LINE DRAIN
TO TURBINE CONTROL LOGIC
PUMP SUCTION
PUMP DISCHARGE
TURBINE EXHAUST
VACUUM PUMP DISCHARGE
STEAM SUPPLY
FOR TURBINE–PUMP DETAIL SEE SH. 2
THERMAL SLEEVE
FEEDWATER SYS
DRW DRAIN H–16018, G–5
SUPPRESSION POOL
PROVIDE HOLD DOWN AGAINST BLOWING REACTOR
OPEN VALVE F031, F029 CLOSE VALVE F010
RHR TEST LINE SH. 2, E–9 REF. 3
TO MAIN CONDENSER H–11260
EMERGENCY AREA COOLER
RCIC EQUIP HI AMB TEMP
NORMAL TEST
ISOLATION SIGNAL REF. 5
POWER SUPPLY SEE NOTE 10
REACTOR BUILDING
TURBINE BUILDING
SEE NOTE 22
NOTES CONT'D ON DWG H16335

H-16335

NOTES: CONT'D FROM DWG H16334

12. PIPING SHOWN IN PHANTOM LEADING TO TURBINE C002 TO BE ARRANGED AND SUPPLIED BY TURBINE VENDOR.
13. THE BAROMETRIC CONDENSER AND VACUUM TANK SHALL BE LOCATED SUCH THAT ITS WATER LEVEL IS BELOW THE BOTTOM OF THE TURBINE EXHAUST FLANGE.
14. DELETED.
15. DELETED.
16. FLUSHING CONNECTIONS SHALL BE PROVIDED IN ACCORDANCE WITH MPL ITEM NO. A61-4020 SEC 9. TEMPORARY STRAINER SCREENS SHALL BE PROVIDED ON THE SUCTION SIDE OF ALL PUMPS IN ACCORDANCE WITH MPL ITEM NO. A61-4020 SEC 9.
17. VALVE AO-F003 SHALL BE LOCATED A MAXIMUM OF SIX FEET FROM THE NOZZLE OF THE TORUS, WITH ADEQUATE CLEARANCES FOR OPERATION OF THE VALVE AND VALVE OPERATOR.
18. WHERE G.V.-NUMBERS ARE SHOWN, THE VALVES ARE TAGGED WITH THESE NUMBERS WHERE G.V.-NUMBERS ARE NOT SHOWN, THE VALVES ARE TAGGED WITH THE MPL. NUMBER.
19. CAP THIS LINE AT TORUS AND TURBINE EXHAUST LINE UNTIL VALVES F102, F103, F104 AND F105 ARE DELIVERED. LINE IS NOT REQUIRED FOR PLANT START-UP.
20. VALVES F104 AND F105 AUTO CLOSE ON COMBINATION OF REACTOR LOW PRESSURE AND HIGH DRYWELL PRESSURE.
21. PUMP SEAL WATER PIPING FABRICATED BY PUMP VENDOR. ANY REPAIRS TO THE 1/2" PUMP SEAL WATER PIPING SHALL BE PIPE CLASS EBB.
22. IN SUPPORT OF AST (10CFR50.67), THE HIGHLIGHTED EQUIPMENT, PIPING AND ASSOCIATED SUPPORTS HAVE BEEN VERIFIED AS SEISMICALLY ADEQUATE FOR THE HATCH U2 1/2 SME EARTHQUAKE TO THE EXTENT REQUIRED TO PERFORM THEIR REQUIRED SAFETY FUNCTION. FUTURE REPAIRS OR MODIFICATIONS SHOULD BE PERFORMED IN A MANNER THAT MAINTAINS THIS SEISMIC QUALIFICATION. REFERENCE ENCLOSURE 9 OF NL-06-1637.
23. FUTURE MODIFICATIONS TO E51 (RCIC) TEST LINE MAY USE PIPE CLASS EBB SPECIFIED COMPONENTS.

TURBINE SUPERVISORY INSTRUMENTATION

TURBINE CONTROL SYSTEM

ALARMS

TURBINE TRIP AND THROTTLE VALVE LIMIT SWITCH

TURBINE TRIPPED

TURBINE BEARING OIL PRESSURE

TURBINE CONTROL LOGIC REF 5 & 11

FLOW CONTROLLER

TURBINE TEST SELECTOR SWITCH

TEST MODE SIGNAL GENERATOR POTENTIOMETER 10/70 MA OUTPUT

H.P. BEARING OIL TEMP.

L.P. BEARING OIL TEMP.

OIL FILTER DIFF. PRESS.

VESSEL HIGH WATER LEVEL

REMOTE TRIP SIGNAL TO TRIP THROTTLE VALVE

PUMP SUCTION PRESSURE

TURBINE EXHAUST PRESSURE

AUTO ISOLATION SIGNAL REF. 5

TRIP THROTTLE VALVE CONTROL

MECHANICAL OVERSPEED TRIP INTERLOCK

NOTE: REMOTE RESET CAPABLE AFTER ALL TRIP SIGNALS EXCEPT 125% MECHANICAL OVERSPEED TRIP.

TURBINE SPEED

SUPPRESSION POOL AREA LEAK DETECTION SYS (SEE REF 6)

RCIC STEAM LINE AREA

HPCI STEAM LINE AREA

VENT AIR INLET

VENT AIR OUTLET

ROOM VENT

AIR INLET

AIR OUTLET

HI DIFF. TEMP.

HI AMB TEMP.

HI AMP TEMP.

TIMER BYPASS

FROM RHR H-16329,D-11 HEAT EXCHANGERS

PUMP H-16334, E-8 SUCTION

TO CRW

E/S K600 H-16334, G-9

TO FEEDWATER H-16334, E-9 THERMAL SLEEVE

PUMP C001

TURBINE C002

TO SUPPRESSION POOL H-16334, E-9

GOVERNING VALVE

TRIP THROTTLE VALVE

REMOTE RESET SWITCH ZONE F-2

FROM STEAM H-16334, D-10 SUPPLY

SEE NOTE 12

1"CAP

BAROMETRIC CONDENSER

VACUUM TANK

SEE NOTE 13

COND. PUMP C002-1

VACUUM PUMP C002-2

TO SUPP. POOL H-16334, E-9

SIGHT GLASS

LUBE OIL COOLER (B001)

AUTO ISOLATION SIGNAL, REF. 5

TO REMOTE TRIP E-2

STRAINER D004

TRAP D004

DRAIN POT

N.C.F.C.

N.O.F.C.

A/S

ND DC

NE DC

THIS DRAWING DEVELOPED FROM G.E. DWG. No. 729E6048A, SHEET 2, REV. 6, SSI. DWG. No. S-16158

CRITICAL DOCUMENT

MPL NO. E51-1010 (ACAD2004) H16335

"This document contains proprietary, confidential, and/or trade secret information of the subsidiaries of Southern Company or of third parties. It is intended for use only by employees of, or authorized contractors of, the subsidiaries of Southern Company. Unauthorized possession, use, distribution, copying, dissemination, or disclosure of any portion hereof is prohibited."

SOUTHERN COMPANY

EDWIN I. HATCH NUCLEAR PLANT UNIT No. 1
RCIC SYSTEM P&ID
SHEET NO. 2

Version: 36.0 | Date: 10/31/18
REVISED PER ABN SNC976330M001, VER. 1.0

BY	CHK'D	APPR'D
RYW	HP	BDW

DRAWN	DESIGNED	LOCATION	DRAWING NUMBER	VERSION
WJB	AA	10-502	H-16335	36.0
DATE	SCALE			
1/14/72	None			

DRAWING CATEGORY: CRITICAL

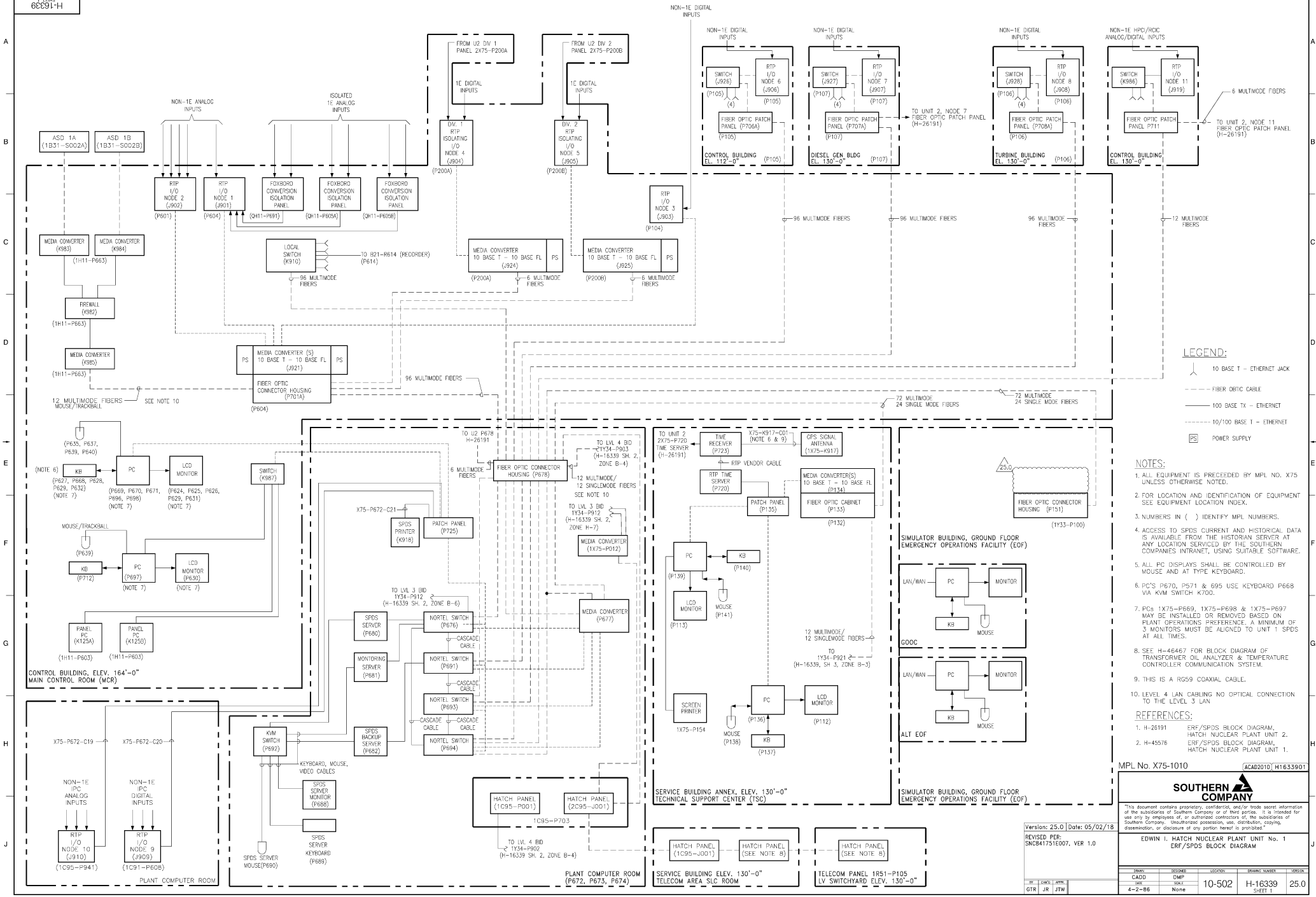

LEGEND:

- 10 BASE T - ETHERNET JACK
- FIBER OPTIC CABLE
- 100 BASE TX - ETHERNET
- 10/100 BASE T - ETHERNET
- PS — POWER SUPPLY

NOTES:

1. ALL EQUIPMENT IS PRECEEDED BY MPL NO. X75 UNLESS OTHERWISE NOTED.
2. FOR LOCATION AND IDENTIFICATION OF EQUIPMENT SEE EQUIPMENT LOCATION INDEX.
3. NUMBERS IN ( ) IDENTIFY MPL NUMBERS.
4. ACCESS TO SPDS CURRENT AND HISTORICAL DATA IS AVAILABLE FROM THE HISTORIAN SERVER AT ANY LOCATION SERVICED BY THE SOUTHERN COMPANIES INTRANET, USING SUITABLE SOFTWARE.
5. ALL PC DISPLAYS SHALL BE CONTROLLED BY MOUSE AND AT TYPE KEYBOARD.
6. PC'S P670, P571 & 695 USE KEYBOARD P668 VIA KVM SWITCH K700.
7. PCs 1X75-P669, 1X75-P698 & 1X75-P697 MAY BE INSTALLED OR REMOVED BASED ON PLANT OPERATIONS PREFERENCE. A MINIMUM OF 3 MONITORS MUST BE ALIGNED TO UNIT 1 SPDS AT ALL TIMES.
8. SEE H-46467 FOR BLOCK DIAGRAM OF TRANSFORMER OIL ANALYZER & TEMPERATURE CONTROLLER COMMUNICATION SYSTEM.
9. THIS IS A RG59 COAXIAL CABLE.
10. LEVEL 4 LAN CABLING NO OPTICAL CONNECTION TO THE LEVEL 3 LAN

REFERENCES:

1. H-26191 — ERF/SPDS BLOCK DIAGRAM, HATCH NUCLEAR PLANT UNIT 2.
2. H-45576 — ERF/SPDS BLOCK DIAGRAM, HATCH NUCLEAR PLANT UNIT 1.

MPL No. X75-1010 ACAD2010 H1633901

SOUTHERN COMPANY

"This document contains proprietary, confidential, and/or trade secret information of the subsidiaries of Southern Company or of third parties. It is intended for use only by employees of, or authorized contractors of, the subsidiaries of Southern Company. Unauthorized possession, use, distribution, copying, dissemination, or disclosure of any portion hereof is prohibited."

Version: 25.0 Date: 05/02/18

REVISED PER: SNC841751E007, VER 1.0

EDWIN I. HATCH NUCLEAR PLANT UNIT No. 1
ERF/SPDS BLOCK DIAGRAM

DRWN	DESIGNED	LOCATION	DRAWING NUMBER	VERSION
CADD	DMP	10-502	H-16339 SHEET 1	25.0
DATE 4-2-86	SCALE None			

PP	CHK'D	APPR'D
GTR	JR	JTW